DATE REVISED	DATE REVISED	FED.RD. DIST.NO.	STATE	JOB NO.	SHEET NO.	TOTAL SHEETS
		6	ARK.	061613	1	215
		I-40 STRS. & APPRS. (HWYS. 13 & 31) (CARLISLE & LONOKE) (S)				

"A FULLY-CONTROLLED ACCESS FACILITY"
ARKANSAS DEPARTMENT OF TRANSPORTATION
CONSTRUCTION PLANS FOR STATE HIGHWAY

ARDOT

I-40 STRS. & APPRS. (HWYS. 13 & 31) (CARLISLE & LONOKE) (S)

LONOKE COUNTY
ROUTE 31 SECTION 3
ROUTE 13 SECTION 10

JOB 061613

FED. AID PROJ. BFP-TAPU-0043(37)

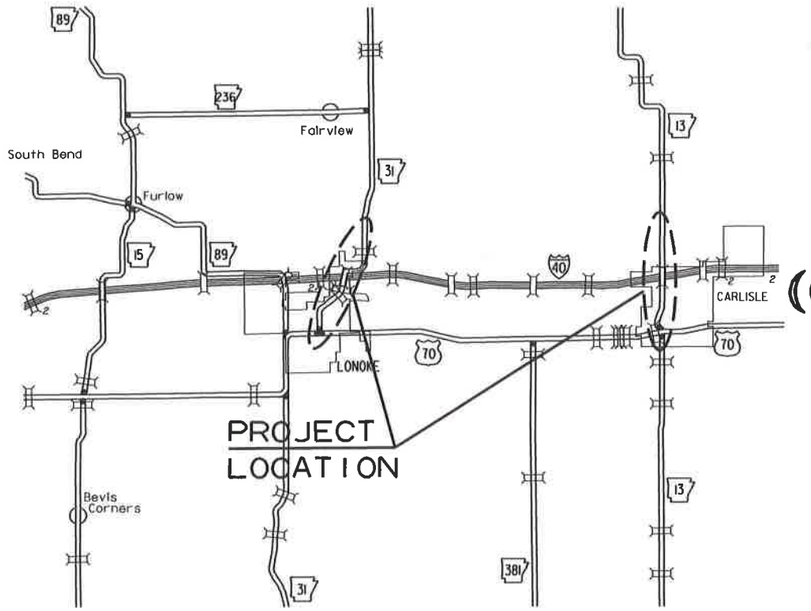

VICINITY MAP

NOT TO SCALE

ARK. HWY. DIST. NO. 6

BRIDGE DATA

① STA. 110+57.25 BR. END
BR. NO. 07605
220'-0" CONTINOUS COMPOSITE PLATE GIRDER UNIT (110', 110')
222'-3 1/8" BRIDGE LENGTH
41'-0" CLEAR ROADWAY
STA. 112+79.51 BR. END

② STA. 211+11.13 BR. END
BR. NO. 07606
225'-0" CONTINOUS COMPOSITE PLATE GIRDER UNIT (120', 105')
227'-2 1/2" BRIDGE LENGTH
30'-0" CLEAR ROADWAY
STA. 213+38.33 BR. END

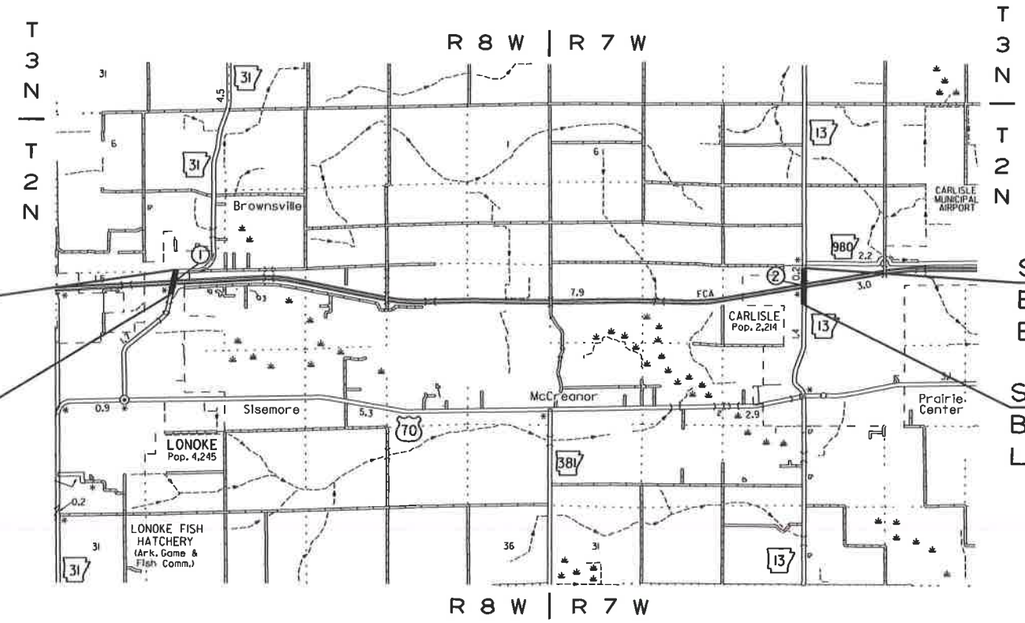

STA. 121+18.00
END SITE 1

STA. 102+00.00
BEGIN JOB 061613
BEGIN SITE 1
LOG MILE 1.48

STA. 221+20.00
END SITE 2
END JOB 061613

STA. 202+00.00
BEGIN SITE 2
LOG MILE 1.24

DESIGN TRAFFIC DATA (SITE 1)

DESIGN YEAR	2043
2023 ADT	9,000
2043 ADT	11,000
2043 DHV	1,210
DIRECTIONAL DISTRIBUTION	0.60
TRUCKS	2%
DESIGN SPEED	40 MPH

DESIGN TRAFFIC DATA (SITE 2)

DESIGN YEAR	2043
2023 ADT	6,300
2043 ADT	8,000
2043 DHV	880
DIRECTIONAL DISTRIBUTION	0.60
TRUCKS	2%
DESIGN SPEED	45 MPH

BEGINNING OF SITE 1	MID POINT OF SITE 1	END OF SITE 1
LATITUDE = N 34°48'06" LONGITUDE = W 91°53'22"	LATITUDE = N 34°48'15" LONGITUDE = W 91°53'20"	LATITUDE = N 34°48'24" LONGITUDE = W 91°53'18"
BEGINNING OF SITE 2	MID POINT OF SITE 2	END OF SITE 2
LATITUDE = N 34°47'51" LONGITUDE = W 91°45'02"	LATITUDE = N 34°48'01" LONGITUDE = W 91°45'02"	LATITUDE = N 34°48'10" LONGITUDE = W 91°45'01"

LENGTH OF PROJECT CALCULATED ALONG C.L.

GROSS LENGTH OF PROJECT	3838.00	FEET	OR	0.727	MILES
NET " " ROADWAY	3388.53	"		0.642	MILES
NET " " BRIDGES	449.47	"		0.085	MILES
NET " " PROJECT	3838.00	"		0.727	MILES

APPROVED

STATE OF ARKANSAS
LICENSED PROFESSIONAL ENGINEER
No. 14276
JARED D. WILEY

CHIEF ENGINEER - PRECONSTRUCTION

AUG 16 2023

MM41715 7/24/2023
R061613.DGN

DATE REVISED	DATE REVISED	FED.RD. DIST.NO.	STATE	JOB NO.	SHEET NO.	TOTAL SHEETS
		6	ARK.	061613	2	215
		INDEX OF SHEETS AND STANDARD DRAWINGS				

STATE OF ARKANSAS
LICENSED PROFESSIONAL ENGINEER
No. 11425
TRINITY D. SMITH

Smith, Trinity D.
Aug 16 2023 3:32 PM

DocuSign

INDEX OF SHEETS

SHEET NO.	TITLE	BRIDGE NO.	DRWG.NO.
1	TITLE SHEET		
2	INDEX OF SHEETS AND STANDARD DRAWINGS		
3	GOVERNING SPECIFICATIONS AND GENERAL NOTES		
4 - 9	TYPICAL SECTIONS OF IMPROVEMENT		
10 - 18	SPECIAL DETAILS		
19 - 30	TEMPORARY EROSION CONTROL DETAILS		
31 - 44	MAINTENANCE OF TRAFFIC DETAILS		
45 - 48	PERMANENT PAVEMENT MARKING DETAILS		
49 - 55	QUANTITIES		
56	SCHEDULE OF BRIDGE QUANTITIES	07605 & 07606	65923
57 - 58	SUMMARY OF QUANTITIES AND REVISIONS		
59 - 62	SURVEY CONTROL DETAILS		
63 - 73	PLAN AND PROFILE SHEETS		
74	SUMMARY OF TRAFFIC SIGNAL QUANTITIES		
75	TRAFFIC SIGNAL NOTES		
76	TRAFFIC SIGNAL STREET NAME SIGNS		
77	GROUNDING ARRAY DETAIL		
78	PEDESTRIAN PUSH PUTTON PEDESTAL DETAIL		
79	TRAFFIC SIGNAL QUANTITIES - I-40 EB RAMP		
80 - 90	SIGNALIZATION PLAN SHEETS		
91	TRAFFIC SIGNAL QUANTITIES - DEE DEE LANE		
92 - 102	SIGNALIZATION PLAN SHEETS		
103	ELECTRICAL LEGEND & NOTES		
104 - 105	HWY. 31 LIGHTING REMOVAL PLANS		
106	HWY. 13 LIGHTING REMOVAL PLANS		
107 - 109	HWY. 31 LIGHTING INSTALLATION PLANS		
110 - 111	HWY. 13 LIGHTING INSTALLATION PLANS		
112 - 114	ELECTRICAL DETAILS		
115	LAYOUT OF BRIDGE HIGHWAY 31 OVER INTERSTATE 40 (SHEET 1 OF 2)	07605	65924
116	LAYOUT OF BRIDGE HIGHWAY 31 OVER INTERSTATE 40 (SHEET 2 OF 2)	07605	65925
117	DETAILS OF END BENT (SHEET 1 OF 5)	07605	65926
118	DETAILS OF END BENT (SHEET 2 OF 5)	07605	65927
119	DETAILS OF END BENT (SHEET 3 OF 5)	07605	65928
120	DETAILS OF END BENT (SHEET 4 OF 5)	07605	65929
121	DETAILS OF END BENT (SHEET 5 OF 5)	07605	65930
122	DETAILS OF INTERMEDIATE BENT (SHEET 1 OF 3)	07605	65931
123	DETAILS OF INTERMEDIATE BENT (SHEET 2 OF 3)	07605	65932
124	DETAILS OF INTERMEDIATE BENT (SHEET 3 OF 3)	07605	65933
125	DETAILS OF ELASTOMERIC BEARINGS	07605	65934
126	DETAILS OF 220'-0" CONTINOUS PLATE GIRDER UNIT (SHEET 1 OF 6)	07605	65935
127	DETAILS OF 220'-0" CONTINOUS PLATE GIRDER UNIT (SHEET 2 OF 6)	07605	65936
128	DETAILS OF 220'-0" CONTINOUS PLATE GIRDER UNIT (SHEET 3 OF 6)	07605	65937
129	DETAILS OF 220'-0" CONTINOUS PLATE GIRDER UNIT (SHEET 4 OF 6)	07605	65938
130	DETAILS OF 220'-0" CONTINOUS PLATE GIRDER UNIT (SHEET 5 OF 6)	07605	65939
131	DETAILS OF 220'-0" CONTINOUS PLATE GIRDER UNIT (SHEET 6 OF 6)	07605	65940
132	LAYOUT OF BRIDGE HIGHWAY 13 OVER INTERSTATE 40 (SHEET 1 OF 2)	07606	65941
133	LAYOUT OF BRIDGE HIGHWAY 13 OVER INTERSTATE 40 (SHEET 2 OF 2)	07606	65942
134	DETAILS OF END BENT (SHEET 1 OF 5)	07606	65943
135	DETAILS OF END BENT (SHEET 2 OF 5)	07606	65944
136	DETAILS OF END BENT (SHEET 3 OF 5)	07606	65945
137	DETAILS OF END BENT (SHEET 4 OF 5)	07606	65946
138	DETAILS OF END BENT (SHEET 5 OF 5)	07606	65947
139	DETAILS OF INTERMEDIATE BENT (SHEET 1 OF 3)	07606	65948
140	DETAILS OF INTERMEDIATE BENT (SHEET 2 OF 3)	07606	65949
141	DETAILS OF INTERMEDIATE BENT (SHEET 3 OF 3)	07606	65950
142	DETAILS OF ELASTOMERIC BEARINGS	07606	65951
143	DETAILS OF 225'-0" CONTINOUS PLATE GIRDER UNIT (SHEET 1 OF 7)	07606	65952
144	DETAILS OF 225'-0" CONTINOUS PLATE GIRDER UNIT (SHEET 2 OF 7)	07606	65953
145	DETAILS OF 225'-0" CONTINOUS PLATE GIRDER UNIT (SHEET 3 OF 7)	07606	65954
146	DETAILS OF 225'-0" CONTINOUS PLATE GIRDER UNIT (SHEET 4 OF 7)	07606	65955
147	DETAILS OF 225'-0" CONTINOUS PLATE GIRDER UNIT (SHEET 5 OF 7)	07606	65956
148	DETAILS OF 225'-0" CONTINOUS PLATE GIRDER UNIT (SHEET 6 OF 7)	07606	65957
149	DETAILS OF 225'-0" CONTINOUS PLATE GIRDER UNIT (SHEET 7 OF 7)	07606	65958
150	COMMON SUPERSTRUCTURE DETAILS (SHEET 1 OF 2)	07605 & 07606	65959
151	COMMON SUPERSTRUCTURE DETAILS (SHEET 2 OF 2)	07605 & 07606	65960
152	DETAILS OF TYPE SPECIAL APPROACH SLABS (SHEET 1 OF 7)	07605	65961
153	DETAILS OF TYPE SPECIAL APPROACH SLABS (SHEET 2 OF 7)	07605	65962
154	DETAILS OF TYPE SPECIAL APPROACH SLABS (SHEET 3 OF 7)	07605	65963
155	DETAILS OF TYPE SPECIAL APPROACH SLABS (SHEET 4 OF 7)	07605	65964
156	DETAILS OF TYPE SPECIAL APPROACH SLABS (SHEET 5 OF 7)	07606	65965
157	DETAILS OF TYPE SPECIAL APPROACH SLABS (SHEET 6 OF 7)	07606	65966
158	DETAILS OF TYPE SPECIAL APPROACH SLABS (SHEET 7 OF 7)	07605 & 07606	65967
159	DETAILS OF RETAINING WALLS (SHEET 1 OF 9)	07605	65968
160	DETAILS OF RETAINING WALLS (SHEET 2 OF 9)	07605	65969
161	DETAILS OF RETAINING WALLS (SHEET 3 OF 9)	07606	65970
162	DETAILS OF RETAINING WALLS (SHEET 4 OF 9)	07606	65971
163	DETAILS OF RETAINING WALLS (SHEET 5 OF 9)	07605 & 07606	65972
164	DETAILS OF RETAINING WALLS (SHEET 6 OF 9)	07605 & 07606	65973
165	DETAILS OF RETAINING WALLS (SHEET 7 OF 9)	07605 & 07606	65974
166	DETAILS OF RETAINING WALLS (SHEET 8 OF 9)	07605	65975
167	DETAILS OF RETAINING WALLS (SHEET 9 OF 9)	07606	65976
168 - 215	CROSS SECTIONS		

NOTE: CROSS SECTIONS NOT NORMALLY INCLUDED IN PLANS SOLD TO PROSPECTIVE BIDDERS, BUT MAY BE HAD UPON REQUEST.

BRIDGE STANDARD DRAWINGS

DRWG.NO.	TITLE	DATE
55000	STANDARD DETAILS FOR EMBANKMENT CONSTRUCTION AND BACKFILL AT BRIDGE ENDS	02-27-14
55001	STANDARD DETAILS FOR DUMPED RIPRAP AND FILTER BLANKET AND COMPUTING EXCAVATION FOR STRUCTURES	02-27-14
55002	STANDARD DETAILS FOR CONCRETE RIPRAP	02-27-14
55005	STANDARD DETAILS FOR PERMANENT STEEL BRIDGE DECK FORMS FOR STEEL & CONCRETE GIRDER SPANS	03-24-16
55006	STANDARD GENERAL NOTES FOR STEEL BRIDGE STRUCTURES	09-02-15
55007	STANDARD DETAILS FOR STEEL BRIDGE STRUCTURES	02-11-16
55008	STANDARD DETAILS FOR POURED SILICONE JOINTS	02-11-16
55010	STANDARD DETAILS FOR TYPE D BRIDGE NAME PLATE	04-14-23
55013A	STANDARD DETAILS FOR TRANSITIONAL APPROACH RAILING TYPE SSTR36	04-08-21
55015	STANDARD DETAILS FOR TYPE H2 RAILING	06-25-20
55021	STANDARD DETAILS FOR CONCRETE FILLED STEEL SHELL PILES AND PILE ENCASEMENTS	03-24-16
55070	STANDARD DETAILS FOR BRIDGE TRAFFIC RAIL TYPE SSTR36	09-27-22

ROADWAY STANDARD DRAWINGS

DRWG.NO.	TITLE	DATE
CDP-1	CONCRETE DITCH PAVING	12-08-16
CG-1	CURBING DETAILS	11-29-07
DR-1	DETAILS OF DRIVEWAYS & ISLANDS	05-19-22
DR-2	DETAILS OF DRIVEWAYS & STREET TURNOUTS	05-19-22
FES-1	FLARED END SECTION	10-18-96
FES-2	FLARED END SECTION	10-18-96
FPC-9	DETAILS OF DROP INLETS & JUNCTION BOXES	11-16-01
FPC-9E	DETAILS OF DROP INLETS (TYPE C)	08-22-02
FPC-9M	DETAILS OF DROP INLET (TYPE MO)	08-22-02
FPC-9S	DETAILS OF DROP INLET & JUNCTION BOX (TYPE ST)	07-26-12
GR-6	GUARDRAIL DETAILS	05-19-22
GR-9	GUARDRAIL DETAILS	11-07-19
GR-12	GUARDRAIL DETAILS	05-14-20
GRT-1	GUARD RAIL DETAILS	11-07-19
MB-1	MAILBOX DETAILS	11-18-04
PCC-1	CONCRETE PIPE CULVERT FILL HEIGHTS & BEDDING	02-27-14
PCM-1	METAL PIPE CULVERT FILL HEIGHTS & BEDDING	02-27-14
PCP-1	PLASTIC PIPE CULVERT (HIGH DENSITY POLYETHYLENE)	02-27-14
PCP-2	PLASTIC PIPE CULVERT (PVC F949)	02-27-14
PCP-3	PLASTIC PIPE CULVERT (POLYPROPYLENE)	02-27-20
PM-1	PAVEMENT MARKING DETAILS	02-27-20
PU-1	DETAILS OF PIPE UNDERDRAIN	12-08-16
SD-5	CONTROLLER CABINET UTILITY DRAWER	09-12-13
SD-6	HEAVY DUTY PULL BOX	11-16-17
SD-7	SPAN WIRE ASSEMBLY WOOD POLE	11-16-17
SD-8	SIGNAL HEAD PLACEMENT	12-08-16
SD-9	SERVICE POINT	11-07-19
SD-11	STEEL POLE WITH MAST ARM	11-16-17
SE-3	TABLES AND METHOD OF SUPERELEVATION FOR TWO-WAY TRAFFIC (4% MAXIMUM)	11-07-19
SI-1	DETAILS OF SPECIAL ITEMS	10-25-18
TC-1	STANDARD TRAFFIC CONTROLS FOR HIGHWAY CONSTRUCTION	11-07-19
TC-2	STANDARD TRAFFIC CONTROLS FOR HIGHWAY CONSTRUCTION	05-20-21
TC-3	STANDARD TRAFFIC CONTROLS FOR HIGHWAY CONSTRUCTION	08-12-21
TC-4	STANDARD TRAFFIC CONTROLS FOR HIGHWAY CONSTRUCTION-TEMPORARY PRECAST BARRIER	11-07-19
TC-5	STANDARD TRAFFIC CONTROLS FOR HIGHWAY CONSTRUCTION-TEMPORARY PRECAST BARRIER	11-07-19
TEC-1	TEMPORARY EROSION CONTROL DEVICES	11-16-17
TEC-3	TEMPORARY EROSION CONTROL DEVICES	11-03-94
WF-1	WIRE FENCE TYPE A AND B	08-22-02
WR-1	WHEELCHAIR RAMPS NEW CONSTRUCTION AND ALTERATIONS	11-10-05

DATE REVISED	DATE REVISED	FED.RD. DIST.NO.	STATE	JOB NO.	SHEET NO.	TOTAL SHEETS
		6	ARK.	061613	3	215
		GOVERNING SPECS & GENERAL NOTES				

GOVERNING SPECIFICATIONS

ARKANSAS STATE HIGHWAY COMMISSION STANDARD SPECIFICATIONS FOR HIGHWAY CONSTRUCTION, EDITION OF 2014, AND THE FOLLOWING SPECIAL PROVISIONS AND SUPPLEMENTAL SPECIFICATIONS:

NUMBER	TITLE
ERRATA_____	ERRATA FOR THE BOOK OF STANDARD SPECIFICATIONS
FHWA-1273__	REQUIRED CONTRACT PROVISIONS FEDERAL-AID CONSTRUCTION CONTRACTS
FHWA-1273__	SUPPLEMENT - EQUAL EMPLOYMENT OPPORTUNITY - NOTICE TO CONTRACTORS
FHWA-1273__	SUPPLEMENT - SPECIFIC EQUAL EMPLOYMENT OPPORTUNITY RESPONSIBILITIES (23 U.S.C. 140)
FHWA-1273__	SUPPLEMENT - EQUAL EMPLOYMENT OPPORTUNITY - GOALS AND TIMETABLES
FHWA-1273__	SUPPLEMENT - EQUAL EMPLOYMENT OPPORTUNITY - FEDERAL STANDARDS
FHWA-1273__	SUPPLEMENT - TRAINING PROGRAM - JOB 061613
FHWA-1273__	SUPPLEMENT - POSTERS AND NOTICES REQUIRED FOR FEDERAL-AID PROJECTS
FHWA-1273__	SUPPLEMENT - WAGE RATE DETERMINATION
100-3_____	CONTRACTOR'S LICENSE
100-4_____	DEPARTMENT NAME CHANGE
102-2_____	ISSUANCE OF PROPOSALS
105-4_____	MAINTENANCE DURING CONSTRUCTION
107-2_____	RESTRAINING CONDITIONS
108-1_____	LIQUIDATED DAMAGES
108-2_____	WORK ALLOWED PRIOR TO ISSUANCE OF WORK ORDER
110-1_____	PROTECTION OF WATER QUALITY AND WETLANDS
210-1_____	UNCLASSIFIED EXCAVATION
303-1_____	AGGREGATE BASE COURSE
306-1_____	QUALITY CONTROL AND ACCEPTANCE
307-1_____	CEMENT
308-1_____	CEMENT
400-1_____	TACK COATS
400-4_____	DESIGN AND QUALITY CONTROL OF ASPHALT MIXTURES
400-5_____	PERCENT AIR VOIDS FOR ACHM MIX DESIGNS
400-6_____	LIQUID ANTI-STRIP ADDITIVE
400-7_____	TRACKLESS TACK
404-3_____	DESIGN OF ASPHALT MIXTURES
410-1_____	CONSTRUCTION REQUIREMENTS AND ACCEPTANCE OF ASPHALT CONCRETE PLANT MIX COURSES
410-2_____	DEVICES FOR MEASURING DENSITY FOR ROLLING PATTERNS
410-4_____	EVALUATION OF ACHM SUBLOT REPLACEMENT MATERIAL
501-2_____	CEMENT
502-1_____	WELDED WIRE REINFORCEMENT
505-1_____	PORTLAND CEMENT CONCRETE DRIVEWAY
600-2_____	INCIDENTAL CONSTRUCTION
603-1_____	LANE CLOSURE NOTIFICATION
604-1_____	RETROREFLECTIVE SHEETING FOR TRAFFIC CONTROL DEVICES IN CONSTRUCTION ZONES
604-3_____	TRAFFIC CONTROL DEVICES IN CONSTRUCTION ZONES (MASH)
605-1_____	CONCRETE DITCH PAVING
606-1_____	PIPE CULVERTS FOR SIDE DRAINS
617-1_____	GUARDRAIL TERMINAL (TYPE 2)
620-1_____	MULCH COVER
621-1_____	FILTER SOCKS
632-1_____	CONCRETE ISLAND
633-1_____	CONCRETE WALKS, CONCRETE STEPS, AND HAND RAILING
634-1_____	CURBING
700-2_____	TRAFFIC CONTROL FACILITIES
800-1_____	STRUCTURES
802-3_____	CONCRETE FOR STRUCTURES
802-4_____	CEMENT
804-2_____	REINFORCING STEEL FOR STRUCTURES
807-2_____	STEEL STRUCTURES
808-1_____	INSTALLATION OF ELASTOMERIC BEARINGS
808-2_____	ELASTOMERIC BEARINGS
JOB 061613__	ACCESSIBLE PEDESTRIAN SIGNAL (APS)
JOB 061613__	ACTUATED CONTROLLER
JOB 061613__	ARCHITECTURAL FINISH
JOB 061613__	ASSESSMENT OF WORKING DAYS – MAINTENANCE OF TRAFFIC
JOB 061613__	BASIC ELECTRICAL REQUIREMENTS
JOB 061613__	BIDDING REQUIREMENTS AND CONDITIONS
JOB 061613__	BROADBAND INTERNET SERVICE FOR ASPHALT CONCRETE PLANT
JOB 061613__	BROADBAND INTERNET SERVICE FOR FIELD OFFICE
JOB 061613__	BUY AMERICA - CONSTRUCTION MATERIALS
JOB 061613__	CABINET DRAWER ASSEMBLY
JOB 061613__	CARGO PREFERENCE ACT REQUIREMENTS
JOB 061613__	CLASS C FLY ASH IN PORTLAND CEMENT CONCRETE PAVEMENT AND CLASS S(AE) CONCRETE
JOB 061613__	COLD MILLING – COUNTY PROPERTY
JOB 061613__	COMMUNICATION CABLE - FIBER
JOB 061613__	COMPACTED EMBANKMENT
JOB 061613__	CONCRETE BRIDGE DECK CURING AND SURFACE TREATMENT RESTRICTIONS
JOB 061613__	CONCRETE DITCH PAVING
JOB 061613__	CONSTRUCTION PROJECT INFORMATION SIGN
JOB 061613__	CULVERT CLEAN OUT
JOB 061613__	DESIGN AND QUALITY CONTROL OF ASPHALT MIXTURES
JOB 061613__	DIRECT TENSION FOR HIGH STRENGTH BOLT ASSEMBLIES
JOB 061613__	DISADVANTAGED BUSINESS ENTERPRISE BIDDER'S RESPONSIBILITIES

GOVERNING SPECIFICATIONS

NUMBER	TITLE
JOB 061613__	ELECTRICAL CONDUCTORS FOR LUMINAIRES
JOB 061613__	ELECTRICAL CONDUCTORS-IN-CONDUIT
JOB 061613__	ELECTRICAL CONDUCTORS-IN-CONDUIT (TRAFFIC SIGNAL)
JOB 061613__	ELECTRICAL DEMOLITION WORK
JOB 061613__	EXTENSION FOR PIPE CULVERTS
JOB 061613__	FLEXIBLE BEGINNING OF WORK – CALENDAR DAY CONTRACT
JOB 061613__	GOALS FOR DISADVANTAGED BUSINESS ENTERPRISE PARTICIPATION
JOB 061613__	GROUNDING AND BONDING
JOB 061613__	HYBRID VIDEO/RADAR DETECTION SYSTEM
JOB 061613__	LED COUNTDOWN PEDESTRIAN SIGNAL HEAD
JOB 061613__	LED LUMINAIRE ASSEMBLY (BUG U0 TYPE)
JOB 061613__	LED TRAFFIC SIGNAL HEAD
JOB 061613__	LIQUIDATED DAMAGES PROCEDURE FOR BID LETTINGS
JOB 061613__	LOCAL RADIO WITH ANTENNA RELOCATION
JOB 061613__	MAINTENANCE OF TRAFFIC
JOB 061613__	MANDATORY ELECTRONIC CONTRACT
JOB 061613__	MANDATORY ELECTRONIC DOCUMENT SUBMITTAL
JOB 061613__	MOBILE SPEED NOTIFICATION SYSTEM (SPECIAL)
JOB 061613__	PARTNERING REQUIREMENTS
JOB 061613__	PLASTIC PIPE
JOB 061613__	PRICE ADJUSTMENT FOR ASPHALT BINDER
JOB 061613__	PRICE ADJUSTMENT FOR FUEL
JOB 061613__	PROHIBITION OF CERTAIN TELECOMMUNICATIONS AND VIDEO SURVEILLANCE SERVICES OR EQUIPMENT
JOB 061613__	PROSECUTION AND PROGRESS WITH BID SCHEDULE
JOB 061613__	RELOCATION OF TRAFFIC SIGNAL HEAD
JOB 061613__	REMOVAL AND DISPOSAL OF WIRE ROPE SAFETY FENCE
JOB 061613__	REMOVAL OF TRAFFIC SIGNAL EQUIPMENT
JOB 061613__	RETAINING WALLS
JOB 061613__	RETROFLECTIVE BACKPLATES
JOB 061613__	ROADWAY ILLUMINATION ASSEMBLY
JOB 061613__	SEQUENCE OF CONSTRUCTION
JOB 061613__	SERVICE POINT ASSEMBLY (TRAFFIC CONTROL DEVICES)
JOB 061613__	SHORING
JOB 061613__	SHORING FOR CULVERTS
JOB 061613__	SITE USE (A+C METHOD) – CALENDAR DAY CONTRACT
JOB 061613__	SOIL STABILIZATION
JOB 061613__	SPECIAL SAFETY REQUIREMENTS FOR BRIDGES
JOB 061613__	STORM WATER POLLUTION PREVENTION PLAN
JOB 061613__	STREET NAME SIGN (MAST ARM MOUNTED)
JOB 061613__	SUBMISSION OF ASPHALT CONCRETE HOT MIX ACCEPTANCE TEST RESULTS
JOB 061613__	SYSTEM LOCAL CONTROLLER
JOB 061613__	SYSTEM LOCAL CONTROLLER (FIBER)
JOB 061613__	TEMPORARY RETAINING WALLS
JOB 061613__	TEXTURED COATING FINISH
JOB 061613__	THERMOPLASTIC PAVEMENT MARKING (YIELD LINE)
JOB 061613__	TOTAL SOLAR ECLIPSE
JOB 061613__	TRAFFIC CONTROL DEVICES IN CONSTRUCTION ZONES
JOB 061613__	UTILITY ADJUSTMENTS
JOB 061613__	VALUE ENGINEERING
JOB 061613__	VIDEO DETECTOR ROTATION
JOB 061613__	WARM MIX ASPHALT
JOB 061613__	WIRE ROPE SAFETY FENCE (POST REPAIR)
JOB 061613__	WIRE ROPE SAFETY FENCE (WRSF) – REMOVE AND RECONSTRUCT

STATE OF ARKANSAS
LICENSED PROFESSIONAL ENGINEER
No. 11425
TRINITY D. SMITH

Aug 16 2023 2:57 PM

DocuSign

GENERAL NOTES

1. GRADE LINE DENOTES FINISHED GRADE WHERE SHOWN ON PLANS.
2. ALL PIPE LINES, POWER, TELEPHONE, AND TELEGRAPH LINES TO BE MOVED OR LOWERED BY THE RESPECTIVE OWNERS AS PER AGREEMENT WITH SUCH OWNERS.
3. ANY EQUIPMENT OR APPURTENANCE THAT INTERFERES WITH THE PROPOSED CONSTRUCTION AND WHICH MAY BE THE PROPERTY OF UTILITY SERVICE ORGANIZATIONS SHALL BE MOVED BY THE OWNERS UNLESS OTHERWISE PROVIDED.
4. THE CONTRACTOR SHALL BE RESPONSIBLE FOR MAINTAINING U. S. MAILBOXES WITHIN THE PROJECT LIMITS IN SUCH A MANNER THAT THE PUBLIC MAY RECEIVE CONTINUED MAIL SERVICE. PAYMENT WILL BE CONSIDERED INCLUDED IN THE PRICE BID FOR THE VARIOUS BID ITEMS.
5. ALL LAND MONUMENTS LOCATED WITHIN THE CONSTRUCTION AREA SHALL BE PROTECTED IN ACCORDANCE WITH SECTION 107.12 OF THE STANDARD SPECIFICATIONS.
6. ALL TREES THAT DO NOT DIRECTLY INTERFERE WITH THE PROPOSED CONSTRUCTION SHALL BE SPARED AS DIRECTED BY THE ENGINEER. CARE AND DISCRETION SHALL BE USED TO ENSURE THAT ALL TREES NOT TO BE REMOVED SHALL BE HARMED AS LITTLE AS POSSIBLE DURING THE CONSTRUCTION OPERATIONS.
7. THE CONTRACTOR SHALL BE RESPONSIBLE FOR PROVIDING A FENCE TO CONTROL LIVESTOCK IN AREAS WHERE PASTURES ARE SEVERED. WIRE FENCE MAY BE CONSTRUCTED INITIALLY, OR IN LIEU THEREOF, THE CONTRACTOR AT HIS OWN EXPENSE, MAY ELECT TO PROVIDE TEMPORARY FENCING SUITABLE TO CONTAIN LIVESTOCK.
8. THE SEQUENCE AS SHOWN ON THE MAINTENANCE OF TRAFFIC PLANS IS A GENERAL OUTLINE FOR THE CONSTRUCTION OF THIS PROJECT, AND IN NO WAY IS IT INTENDED TO COVER EVERY ITEM IN THE PROJECT. ITEMS NOT CRITICAL TO THE CONSTRUCTION SEQUENCE MAY BE CONSTRUCTED IN ANY STAGE AS APPROVED BY THE RESIDENT ENGINEER.
9. ALL FLEXIBLE BASE AND ASPHALTIC PAVEMENTS REMOVED SHALL BE PAID FOR UNDER THE ITEM NO. 210 - UNCLASSIFIED EXCAVATION.
10. THE EXISTING ASPHALT PAVEMENT TO BE REMOVED FROM THE REMAINING PAVEMENT SHALL BE SEPARATED BY SAWING ALONG A NEAT LINE. AFTER SAWING, THE PAVEMENT TO BE REMOVED SHALL BE CAREFULLY REMOVED IN A MANNER THAT WILL NOT DAMAGE THE PAVEMENT THAT IS TO REMAIN. ANY DAMAGE OF THE ASPHALT PAVEMENT THAT IS TO REMAIN IN PLACE SHALL BE REPAIRED AT THE CONTRACTOR'S EXPENSE.

GOVERNING SPECIFICATIONS AND GENERAL NOTES

DATE REVISED	DATE REVISED	FED.RD. DIST.NO.	STATE	JOB NO.	SHEET NO.	TOTAL SHEETS
		6	ARK.	061613	4	215
		TYPICAL SECTIONS OF IMPROVEMENT				

STATE OF ARKANSAS
LICENSED PROFESSIONAL ENGINEER
No. 11425
TRINITY D. SMITH

Aug 16 2023 2:57 PM

DocuSign

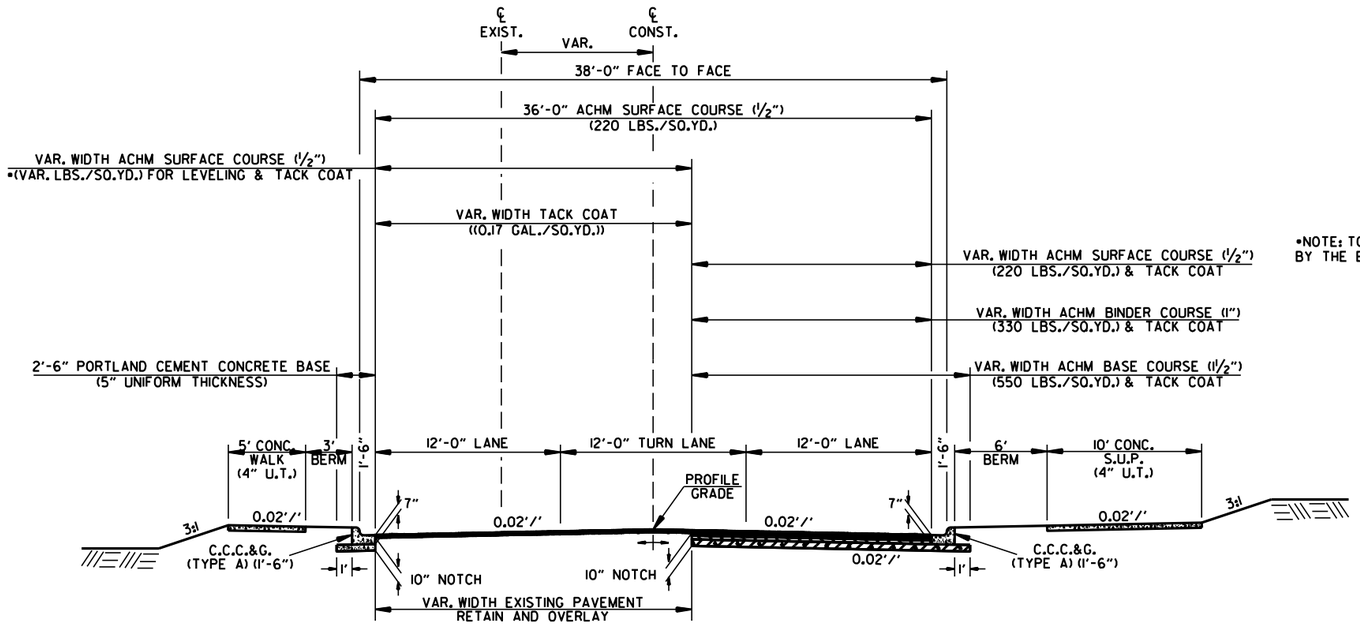

SITE 1 - THREE-LANE NOTCH, WIDEN, AND OVERLAY SECTION

STA. 102+00.00 TO STA. 107+75.08

•NOTE: TO BE USED IF AND WHERE DIRECTED BY THE ENGINEER

NOTES:

REFER TO CROSS SECTIONS FOR DEVIATION FROM THE NORMAL SLOPES. NO CHANGES SHALL BE MADE FROM THE PLANNED SLOPES WITHOUT THE APPROVAL OF THE ENGINEER.

ASPHALT FOR LEVELING OF EXISTING PAVEMENT SHALL BE PLACED ONLY IF AND WHERE DIRECTED BY THE ENGINEER. CALCULATIONS FOR THE AMOUNT OF LEVELING AND LEVELING OPERATIONS SHALL BE PERFORMED BEFORE CONSTRUCTING NOTCH AND WIDENING. CALCULATIONS WILL NOT BE PAID FOR DIRECTLY BUT PAYMENT WILL BE CONSIDERED INCLUDED IN THE VARIOUS PAY ITEMS.

THE FINAL 2" OF SURFACE COURSE IS TO BE PLACED AFTER ALL OTHER COURSES HAVE BEEN LAID. LONGITUDINAL JOINTS SHALL BE AT LANE LINES.

PRIOR TO AND DURING PLACEMENT OF PAVEMENT IN FRONT OF THE CURB AND GUTTER, THE CONTRACTOR SHALL PROVIDE POSITIVE DRAINAGE AT ALL TIMES. THE METHOD(S) USED SHALL BE APPROVED BY THE ENGINEER. PAYMENT FOR THIS WORK SHALL BE CONSIDERED INCLUDED IN THE PRICE BID FOR THE VARIOUS CONTRACT ITEMS.

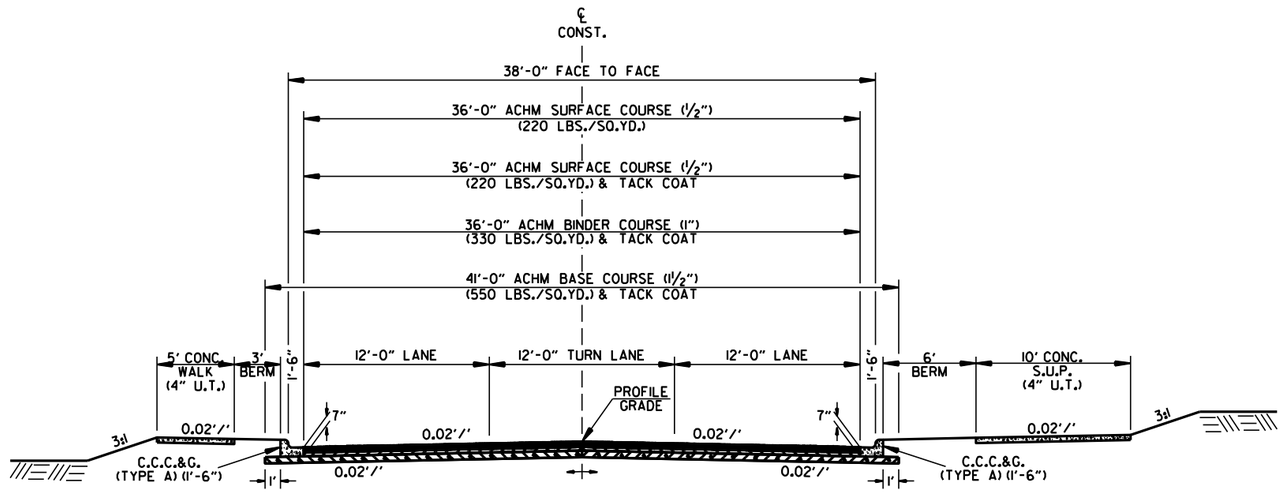

SITE 1 - THREE-LANE FULL DEPTH SECTION

STA. 107+75.08 TO STA. 108+40.67

MM41715 7/24/2023
R061613.DGN

TYPICAL SECTIONS OF IMPROVEMENT

DATE REVISED	DATE REVISED	FED.RD. DIST.NO.	STATE	JOB NO.	SHEET NO.	TOTAL SHEETS
		6	ARK.	061613	5	215
		TYPICAL SECTIONS OF IMPROVEMENT				

STATE OF ARKANSAS
LICENSED PROFESSIONAL ENGINEER
No. 11425
TRINITY D. SMITH

Aug 16 2023 2:57 PM

DocuSign

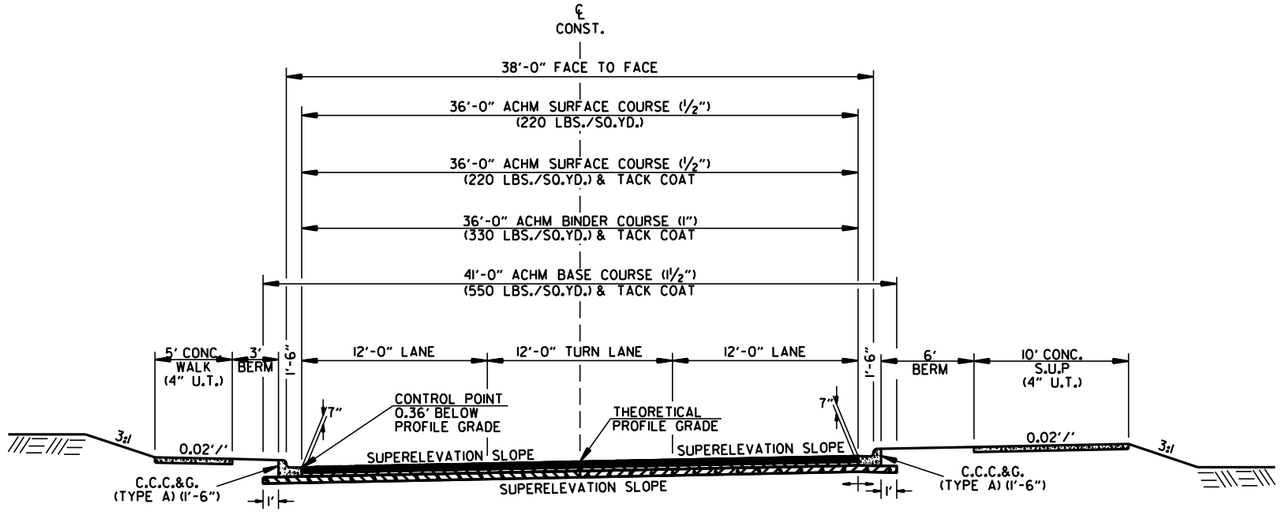

SITE 1 - THREE-LANE FULL DEPTH SECTION
SUPERELEVATION

STA. 108+40.67 TO STA. 110+16.38
STA. 113+20.74 TO STA. 116+73.01

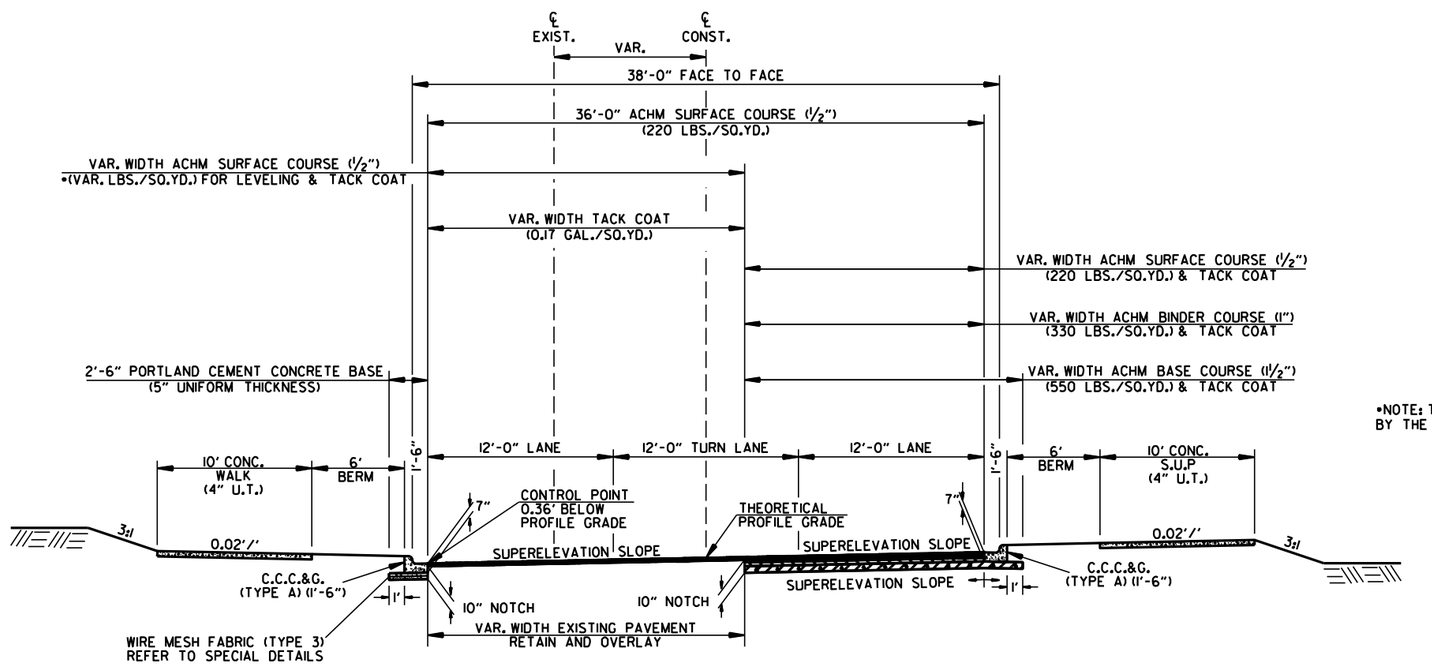

SITE 1 - THREE-LANE NOTCH, WIDEN, AND OVERLAY SECTION
SUPERELEVATION

STA. 116+73.01 TO STA. 119+07.91

NOTES:

REFER TO CROSS SECTIONS FOR DEVIATION FROM THE NORMAL SLOPES. NO CHANGES SHALL BE MADE FROM THE PLANNED SLOPES WITHOUT THE APPROVAL OF THE ENGINEER.

ASPHALT FOR LEVELING OF EXISTING PAVEMENT SHALL BE PLACED ONLY IF AND WHERE DIRECTED BY THE ENGINEER. CALCULATIONS FOR THE AMOUNT OF LEVELING AND LEVELING OPERATIONS SHALL BE PERFORMED BEFORE CONSTRUCTING NOTCH AND WIDENING. CALCULATIONS WILL NOT BE PAID FOR DIRECTLY BUT PAYMENT WILL BE CONSIDERED INCLUDED IN THE VARIOUS PAY ITEMS.

THE FINAL 2" OF SURFACE COURSE IS TO BE PLACED AFTER ALL OTHER COURSES HAVE BEEN LAID. LONGITUDINAL JOINTS SHALL BE AT LANE LINES.

PRIOR TO AND DURING PLACEMENT OF PAVEMENT IN FRONT OF THE CURB AND GUTTER, THE CONTRACTOR SHALL PROVIDE POSITIVE DRAINAGE AT ALL TIMES. THE METHOD(S) USED SHALL BE APPROVED BY THE ENGINEER. PAYMENT FOR THIS WORK SHALL BE CONSIDERED INCLUDED IN THE PRICE BID FOR THE VARIOUS CONTRACT ITEMS.

*NOTE: TO BE USED IF AND WHERE DIRECTED BY THE ENGINEER

MM41715 7/24/2023
R061613.DGN

TYPICAL SECTIONS OF IMPROVEMENT

DATE REVISED	DATE REVISED	FED.RD. DIST.NO.	STATE	JOB NO.	SHEET NO.	TOTAL SHEETS
		6	ARK.	061613	6	215
		TYPICAL SECTIONS OF IMPROVEMENT				

STATE OF ARKANSAS
LICENSED PROFESSIONAL ENGINEER
No. 11425
TRINITY D. SMITH

Aug 16 2023 2:58 PM

DocuSign

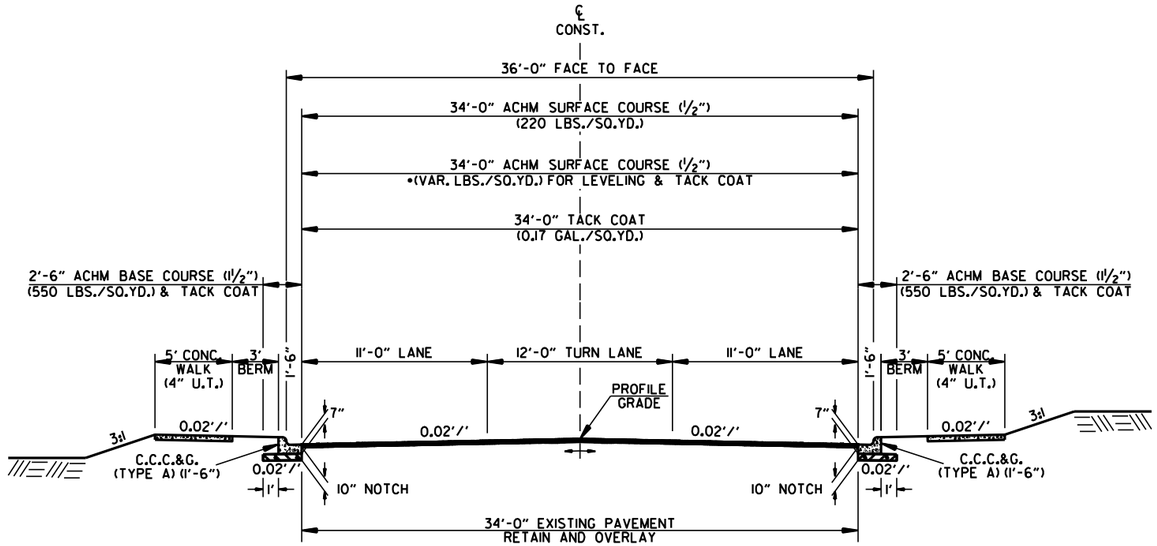

DEE DEE LN. - THREE-LANE NOTCH, WIDEN, AND OVERLAY SECTION

STA. 119+47.09 TO STA. 121+18.00

*NOTE: TO BE USED IF AND WHERE DIRECTED BY THE ENGINEER

NOTES:

REFER TO CROSS SECTIONS FOR DEVIATION FROM THE NORMAL SLOPES. NO CHANGES SHALL BE MADE FROM THE PLANNED SLOPES WITHOUT THE APPROVAL OF THE ENGINEER.

ASPHALT FOR LEVELING OF EXISTING PAVEMENT SHALL BE PLACED ONLY IF AND WHERE DIRECTED BY THE ENGINEER. CALCULATIONS FOR THE AMOUNT OF LEVELING AND LEVELING OPERATIONS SHALL BE PERFORMED BEFORE CONSTRUCTING NOTCH AND WIDENING. CALCULATIONS WILL NOT BE PAID FOR DIRECTLY BUT PAYMENT WILL BE CONSIDERED INCLUDED IN THE VARIOUS PAY ITEMS.

THE FINAL 2" OF SURFACE COURSE IS TO BE PLACED AFTER ALL OTHER COURSES HAVE BEEN LAID. LONGITUDINAL JOINTS SHALL BE AT LANE LINES.

PRIOR TO AND DURING PLACEMENT OF PAVEMENT IN FRONT OF THE CURB AND GUTTER, THE CONTRACTOR SHALL PROVIDE POSITIVE DRAINAGE AT ALL TIMES. THE METHOD(S) USED SHALL BE APPROVED BY THE ENGINEER. PAYMENT FOR THIS WORK SHALL BE CONSIDERED INCLUDED IN THE PRICE BID FOR THE VARIOUS CONTRACT ITEMS.

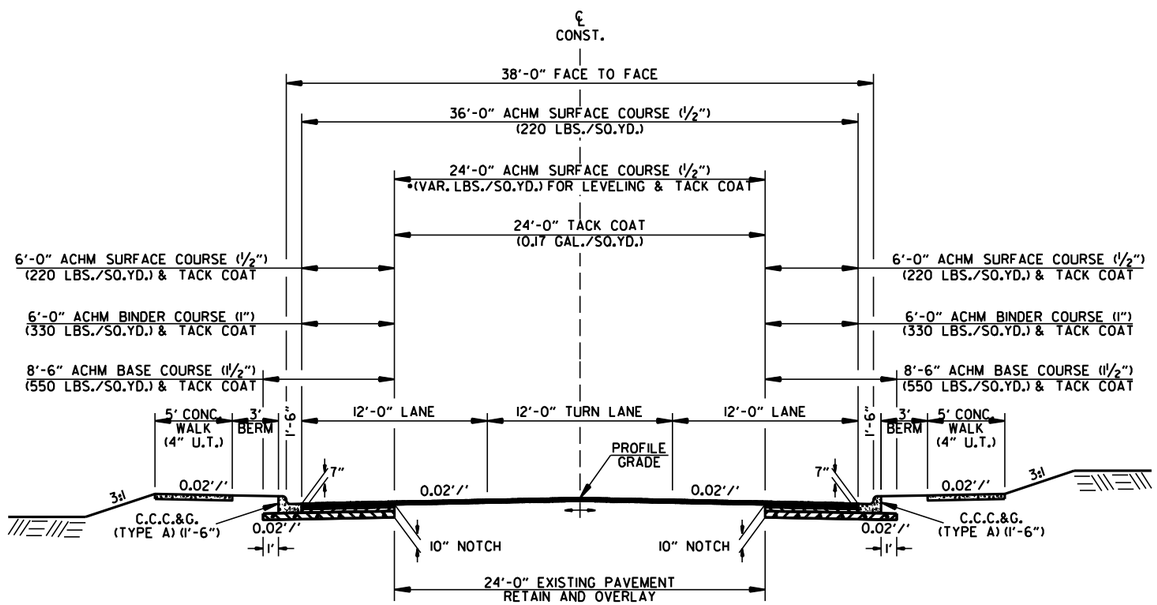

BROWNSVILLE LOOP/HWY. 31 - THREE-LANE NOTCH, WIDEN, AND OVERLAY SECTION

STA. 303+15.00 TO STA. 311+25.00

*NOTE: TO BE USED IF AND WHERE DIRECTED BY THE ENGINEER

TYPICAL SECTIONS OF IMPROVEMENT

WM41715 7/24/2023
R061613.DGN

DATE REVISED	DATE REVISED	FED.RD. DIST.NO.	STATE	JOB NO.	SHEET NO.	TOTAL SHEETS
		6	ARK.	061613	7	215
		TYPICAL SECTIONS OF IMPROVEMENT				

STATE OF ARKANSAS
LICENSED PROFESSIONAL
No. 11425
TRINITY D. SMITH

Aug 16 2023 2:58 PM

DocuSign

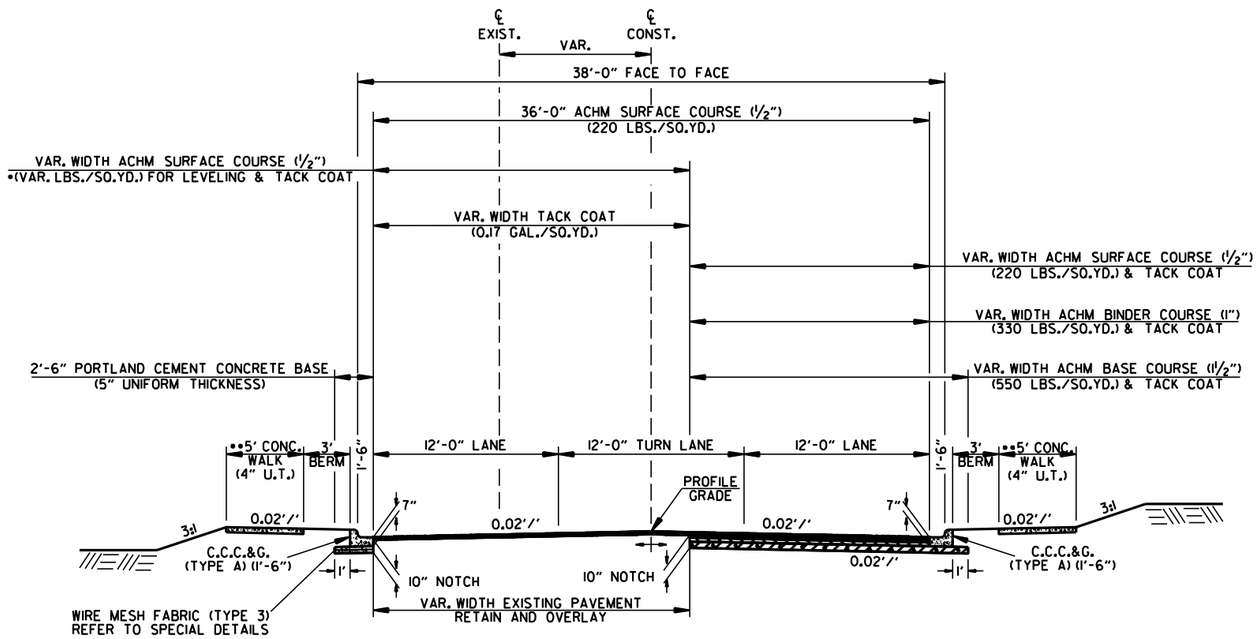

SITE 2 - THREE-LANE NOTCH, WIDEN, AND OVERLAY SECTION

STA. 202+00.00 TO STA. 206+05.00
STA. 206+05.00 TO STA. 208+35.48 (TAPER)

•NOTE: TO BE USED IF AND WHERE DIRECTED BY THE ENGINEER

••NOTE: 8' BERM AND NO SIDEWALK BEGINNING AT STATION 205+35.00

NOTES:

REFER TO CROSS SECTIONS FOR DEVIATION FROM THE NORMAL SLOPES. NO CHANGES SHALL BE MADE FROM THE PLANNED SLOPES WITHOUT THE APPROVAL OF THE ENGINEER.

ASPHALT FOR LEVELING OF EXISTING PAVEMENT SHALL BE PLACED ONLY IF AND WHERE DIRECTED BY THE ENGINEER. CALCULATIONS FOR THE AMOUNT OF LEVELING AND LEVELING OPERATIONS SHALL BE PERFORMED BEFORE CONSTRUCTING NOTCH AND WIDENING. CALCULATIONS WILL NOT BE PAID FOR DIRECTLY BUT PAYMENT WILL BE CONSIDERED INCLUDED IN THE VARIOUS PAY ITEMS.

THE FINAL 2" OF SURFACE COURSE IS TO BE PLACED AFTER ALL OTHER COURSES HAVE BEEN LAID. LONGITUDINAL JOINTS SHALL BE AT LANE LINES.

PRIOR TO AND DURING PLACEMENT OF PAVEMENT IN FRONT OF THE CURB AND GUTTER, THE CONTRACTOR SHALL PROVIDE POSITIVE DRAINAGE AT ALL TIMES. THE METHOD(S) USED SHALL BE APPROVED BY THE ENGINEER. PAYMENT FOR THIS WORK SHALL BE CONSIDERED INCLUDED IN THE PRICE BID FOR THE VARIOUS CONTRACT ITEMS.

MM41715 7/24/2023
R061613.DGN

TYPICAL SECTIONS OF IMPROVEMENT

DATE REVISED	DATE REVISED	FED.RD. DIST.NO.	STATE	JOB NO.	SHEET NO.	TOTAL SHEETS
		6	ARK.	061613	8	215
		TYPICAL SECTIONS OF IMPROVEMENT				

STATE OF ARKANSAS
LICENSED PROFESSIONAL ENGINEER
No. 11425
TRINITY D. SMITH

Aug 16 2023 2:58 PM

DocuSign

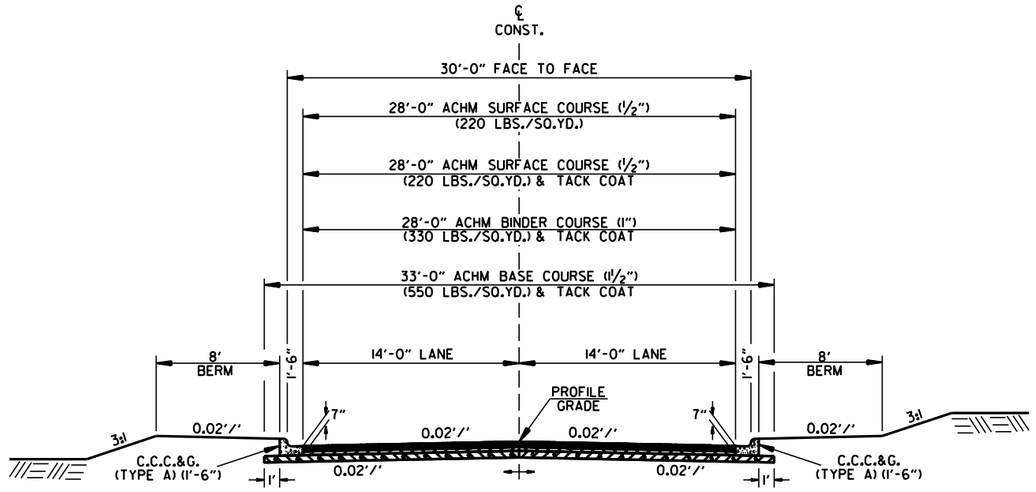

SITE 2 - TWO-LANE FULL DEPTH SECTION

STA. 208+35.48 TO STA. 208+75.00 (TAPER)
STA. 208+75.00 TO STA. 209+43.27

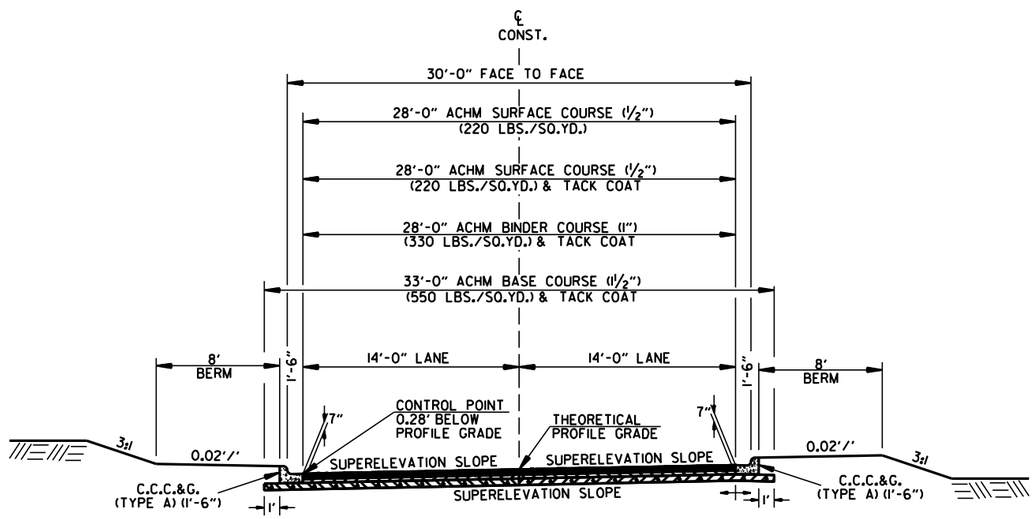

SITE 2 - TWO-LANE FULL DEPTH SECTION
SUPERELEVATION

STA. 209+43.27 TO STA. 210+74.63
STA. 213+74.83 TO STA. 216+85.18

NOTES:

REFER TO CROSS SECTIONS FOR DEVIATION FROM THE NORMAL SLOPES. NO CHANGES SHALL BE MADE FROM THE PLANNED SLOPES WITHOUT THE APPROVAL OF THE ENGINEER.

THE FINAL 2" OF SURFACE COURSE IS TO BE PLACED AFTER ALL OTHER COURSES HAVE BEEN LAID. LONGITUDINAL JOINTS SHALL BE AT LANE LINES.

PRIOR TO AND DURING PLACEMENT OF PAVEMENT IN FRONT OF THE CURB AND GUTTER, THE CONTRACTOR SHALL PROVIDE POSITIVE DRAINAGE AT ALL TIMES. THE METHOD(S) USED SHALL BE APPROVED BY THE ENGINEER. PAYMENT FOR THIS WORK SHALL BE CONSIDERED INCLUDED IN THE PRICE BID FOR THE VARIOUS CONTRACT ITEMS.

TYPICAL SECTIONS OF IMPROVEMENT

DATE REVISED	DATE REVISED	FED.RD. DIST.NO.	STATE	JOB NO.	SHEET NO.	TOTAL SHEETS
		6	ARK.	061613	9	215
		TYPICAL SECTIONS OF IMPROVEMENT				

STATE OF ARKANSAS
LICENSED PROFESSIONAL ENGINEER
No. 11425
TRINITY D. SMITH

Aug 16 2023 2:58 PM

DocuSign

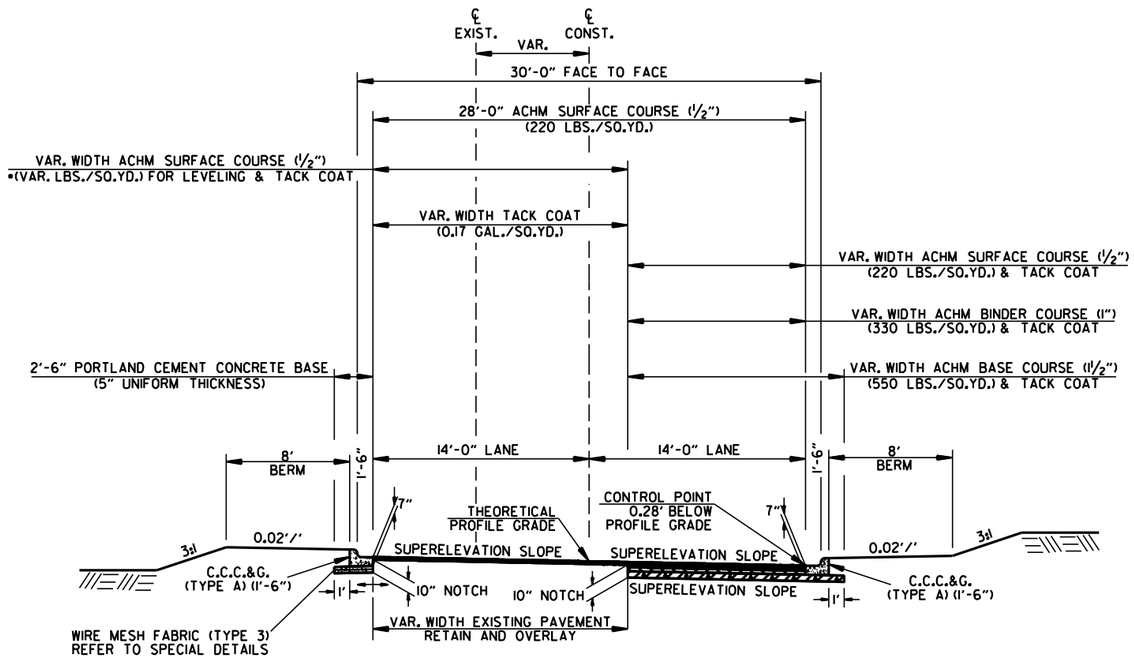

SITE 2 - TWO-LANE NOTCH, WIDEN, AND OVERLAY SECTION
SUPERELEVATION
STA. 216+85.18 TO STA. 221+20.00

*NOTE: TO BE USED IF AND WHERE DIRECTED BY THE ENGINEER

NOTES:

REFER TO CROSS SECTIONS FOR DEVIATION FROM THE NORMAL SLOPES. NO CHANGES SHALL BE MADE FROM THE PLANNED SLOPES WITHOUT THE APPROVAL OF THE ENGINEER.

ASPHALT FOR LEVELING OF EXISTING PAVEMENT SHALL BE PLACED ONLY IF AND WHERE DIRECTED BY THE ENGINEER. CALCULATIONS FOR THE AMOUNT OF LEVELING AND LEVELING OPERATIONS SHALL BE PERFORMED BEFORE CONSTRUCTING NOTCH AND WIDENING. CALCULATIONS WILL NOT BE PAID FOR DIRECTLY BUT PAYMENT WILL BE CONSIDERED INCLUDED IN THE VARIOUS PAY ITEMS.

THE FINAL 2" OF SURFACE COURSE IS TO BE PLACED AFTER ALL OTHER COURSES HAVE BEEN LAID. LONGITUDINAL JOINTS SHALL BE AT LANE LINES.

PRIOR TO AND DURING PLACEMENT OF PAVEMENT IN FRONT OF THE CURB AND GUTTER, THE CONTRACTOR SHALL PROVIDE POSITIVE DRAINAGE AT ALL TIMES. THE METHOD(S) USED SHALL BE APPROVED BY THE ENGINEER. PAYMENT FOR THIS WORK SHALL BE CONSIDERED INCLUDED IN THE PRICE BID FOR THE VARIOUS CONTRACT ITEMS.

MM41715 7/24/2023
R061613.DGN

TYPICAL SECTIONS OF IMPROVEMENT

DATE REVISED	DATE REVISED	FED.RD. DIST.NO.	STATE	JOB NO.	SHEET NO.	TOTAL SHEETS
		6	ARK.	061613	10	215
		SPECIAL DETAILS				

STATE OF ARKANSAS
LICENSED PROFESSIONAL ENGINEER
No. 11425
TRINITY D. SMITH

Aug 16 2023 2:59 PM

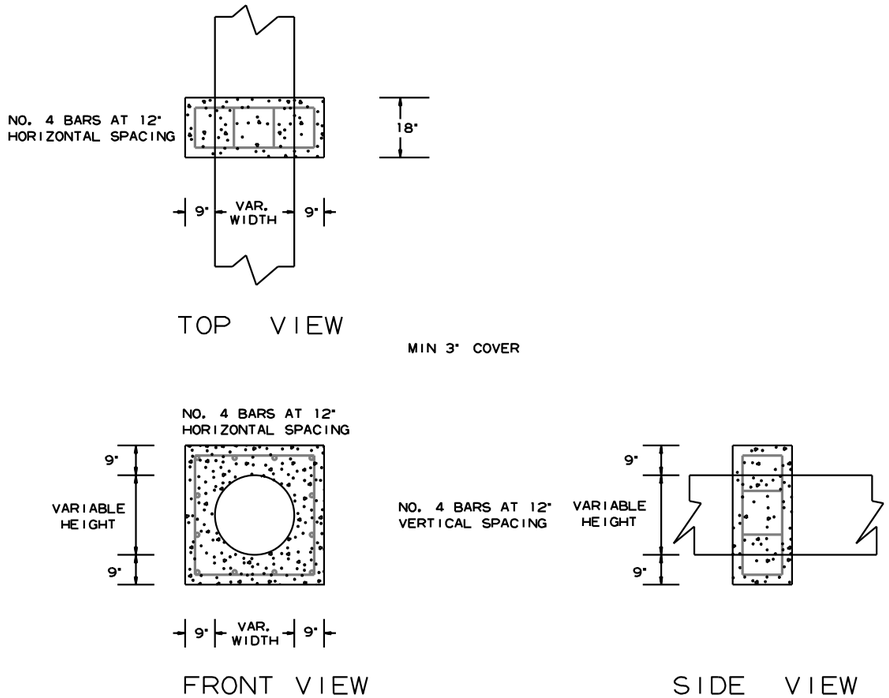

PIPE EXTENSION
REINFORCED CONCRETE COLLAR DETAIL

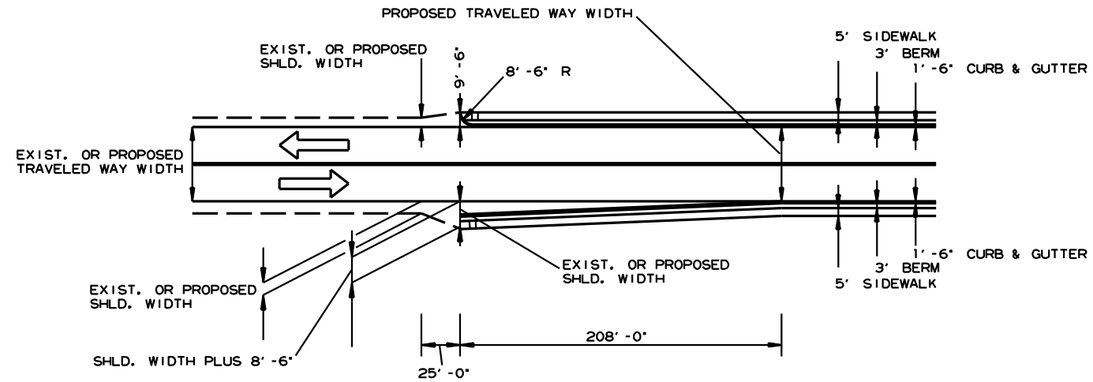

TRANSITION FROM OPEN SHOULDER
TO CURB & GUTTER SECTION

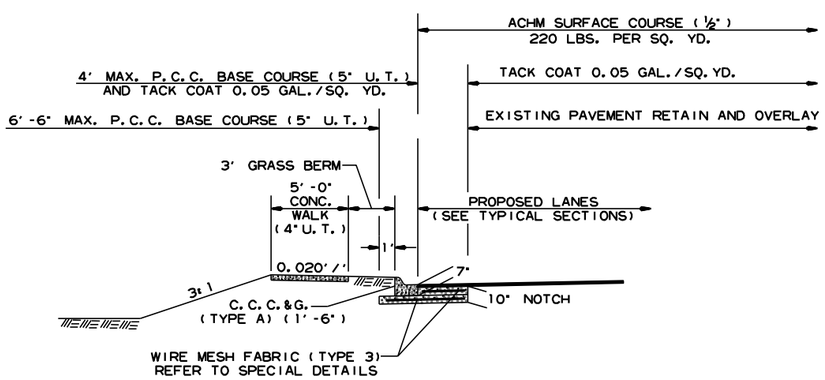

P.C.C. BASE WIDENING DETAIL

P.C.C. BASE WIDENING TO BE USED IF AND WHERE DIRECTED BY THE ENGINEER.

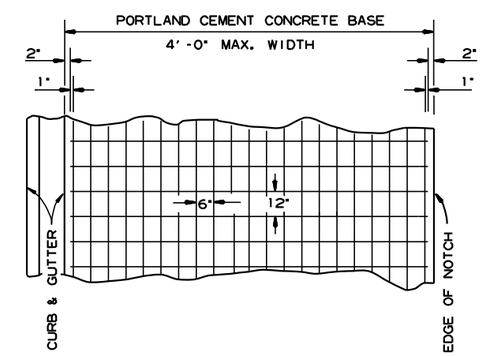

6" X 12" MESH FABRIC (TYPE 3) (W5.5 X W2.9) = 4.26 LBS./SQ. YD.

NOTES:

1. LAP MESH FABRIC MIN. 12" LONGITUDINALLY AND MIN. 6" TRANSVERSELY.
2. MESH FABRIC IS NOT REQUIRED WHEN WIDTH OF PORTLAND CEMENT CONCRETE BASE IS LESS THAN 12".
3. MESH FABRIC (TYPE 3) WILL NOT BE PAID FOR DIRECTLY, BUT FULL COMPENSATION THEREFORE WILL BE CONSIDERED INCLUDED IN THE CONTRACT PRICE BID PER SQ. YD. FOR PORTLAND CEMENT CONCRETE BASE (5" U.T.)

DETAIL OF REINFORCING
STEEL FOR PAVEMENT
(MESH FABRIC TYPE 3)

MM41715 7/24/2023
R061613.DGN

DATE REVISED	DATE REVISED	FED.RD. DIST.NO.	STATE	JOB NO.	SHEET NO.	TOTAL SHEETS
		6	ARK.	061613	11	215
		SPECIAL DETAILS				

STATE OF ARKANSAS
LICENSED PROFESSIONAL ENGINEER
No. 11425
TRINITY D. SMITH

Aug 16 2023 3:00 PM

DocuSign

6.0" Radius, 1.3" Border, Black on Orange;
"Job XXXXXX" C 2K; "Start Date Mo Year" C 2K;
"Est Completion Mo Year" C 2K; "IDRIVE " Arial;
" ARKANSAS.COM " Arial;

CONSTRUCTION PROJECT INFORMATION SIGN

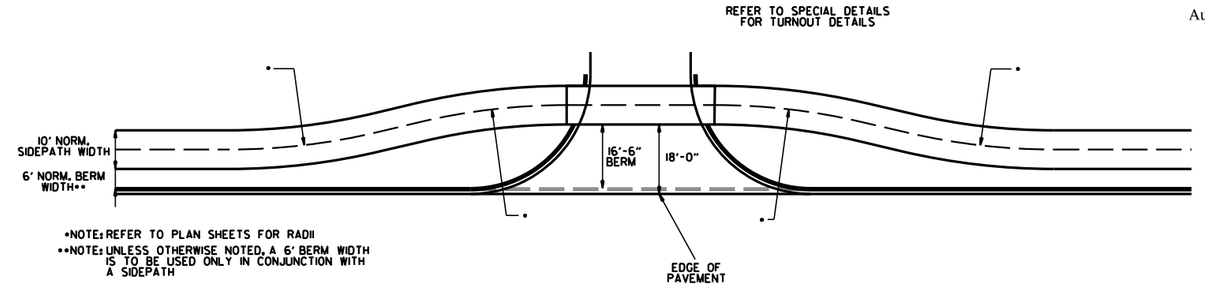

*NOTE: REFER TO PLAN SHEETS FOR RADII
**NOTE: UNLESS OTHERWISE NOTED, A 6' BERM WIDTH IS TO BE USED ONLY IN CONJUNCTION WITH A SIDEPATH

DETAIL FOR SIDEPATH BUMP-OUT AT TURNOUTS

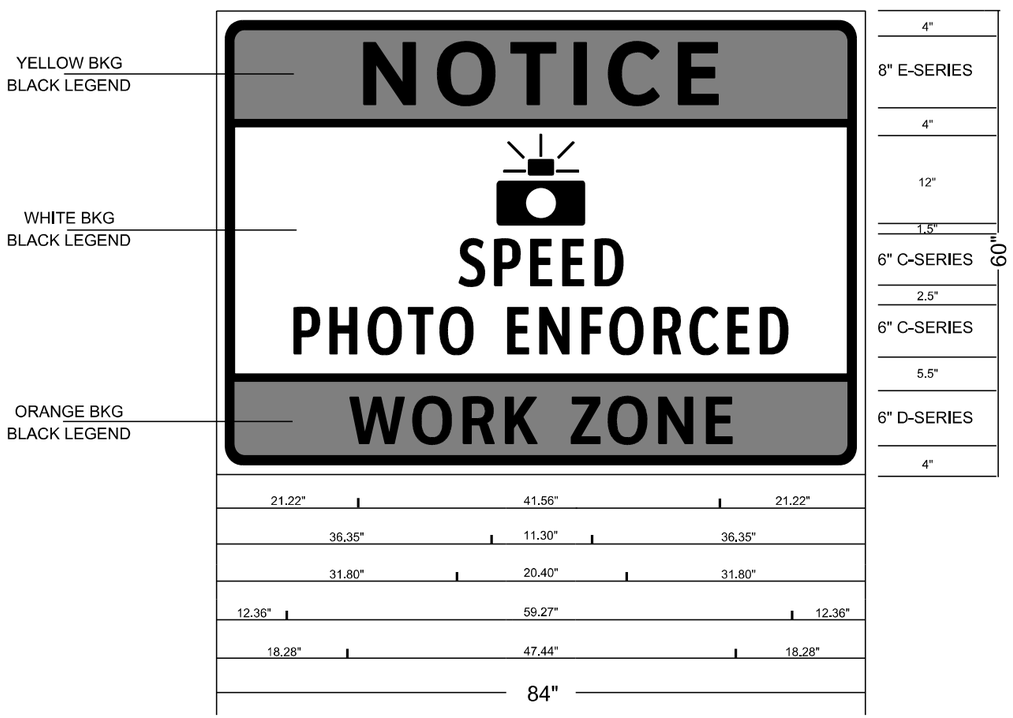

WZ-1 (INTERSTATE) SIGN

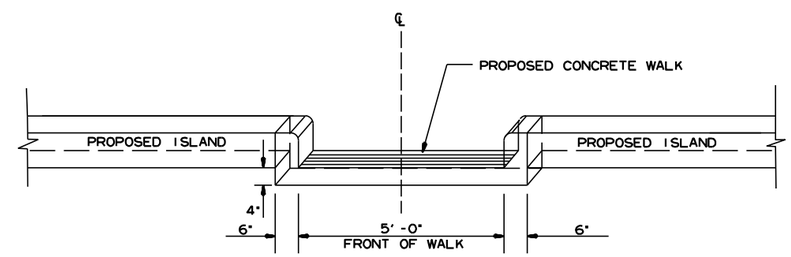

FACE SHALL MEET REQUIREMENTS OF TYPE C CURB

NOTE: CONCRETE WALK-THROUGH ISLAND SHALL BE POURED MONOLITHICALLY. ALL MATERIALS REQUIRED TO CONSTRUCT CONCRETE WALK-THROUGH ISLAND SHALL BE INCLUDED IN THE PRICE BID FOR CONCRETE ISLAND.

CONCRETE WALK-THROUGH ISLAND

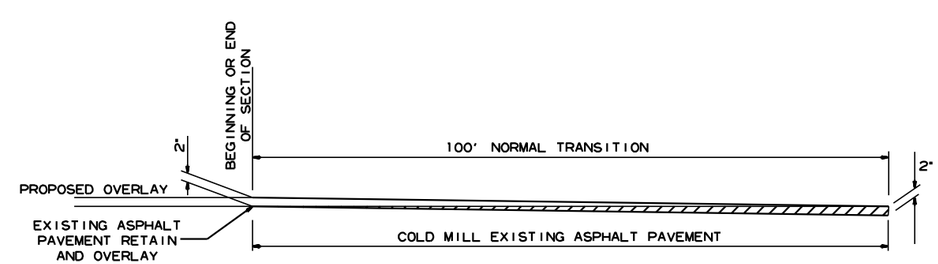

DETAIL FOR TRANSITIONS

MM41715 7/24/2023
R061613.DGN

SPECIAL DETAILS

DATE REVISED	DATE REVISED	FED.RD. DIST.NO.	STATE	JOB NO.	SHEET NO.	TOTAL SHEETS
		6	ARK.	061613	12	215
		SPECIAL DETAILS				

STATE OF ARKANSAS
LICENSED PROFESSIONAL ENGINEER
No. 11425
TRINITY D. SMITH

Aug 16 2023 3:03 PM

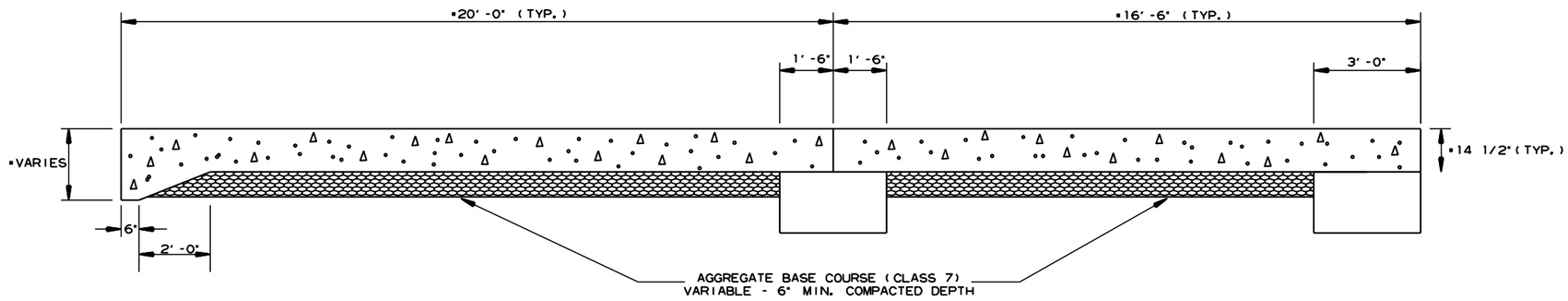

* SEE APPROACH SLAB DETAILS IN BRIDGE DRAWINGS

SECTION OF APPROACH SLAB

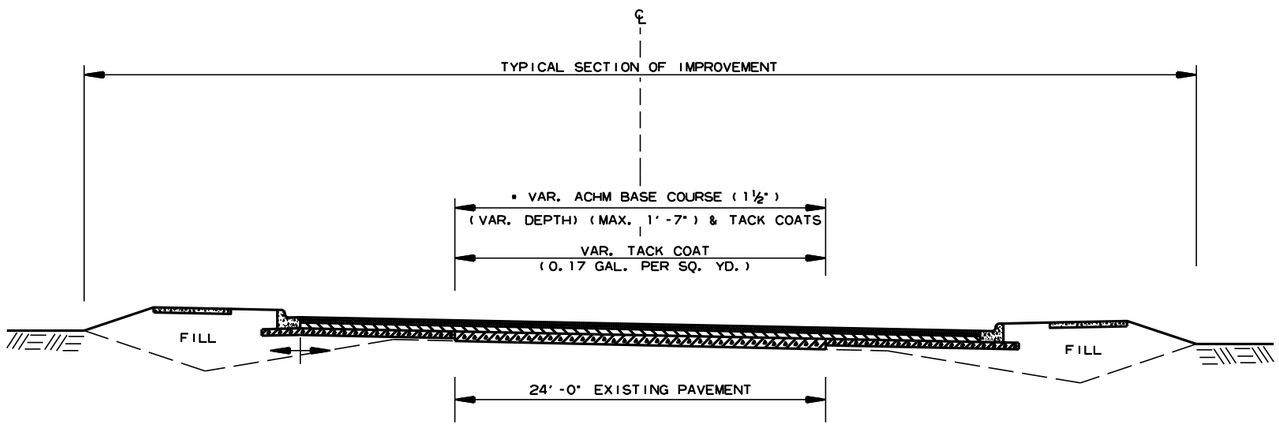

METHOD OF RAISING GRADE

HWY. 13 - STA. 218+50.00 TO STA. 219+90.00

NOTES:

(1) THIS DETAIL TO BE USED ONLY WHERE DIRECTED BY THE ENGINEER.

(2) QUANTITIES FOR METHOD OF GRADE RAISE USING ASPHALT WERE CALCULATED ON THIS PROJECT AT LOCATIONS WHERE THE DISTANCE BETWEEN THE EXISTING ASPHALT ROADWAY AND THE PROPOSED SUBGRADE WAS ONE FOOT OR LESS.

(3) IN LOCATIONS WHERE THE DISTANCE BETWEEN THE PROPOSED SUBGRADE AND THE EXISTING ASPHALT ROADWAY IS MORE THAN ONE FOOT, SCARIFICATION OF THE EXISTING ASPHALT ROADWAY WILL BE REQUIRED AS STATED IN SECTION 210, SUBSECTION 210.09, OF THE STANDARD SPECIFICATIONS.

MM41715 7/24/2023
R061613.DGN

DATE REVISED	DATE REVISED	FED.RD. DIST.NO.	STATE	JOB NO.	SHEET NO.	TOTAL SHEETS
		6	ARK.	061613	13	215
		SPECIAL DETAILS				

STATE OF ARKANSAS
LICENSED PROFESSIONAL ENGINEER
No. 11425
TRINITY D. SMITH

Aug 16 2023 3:04 PM

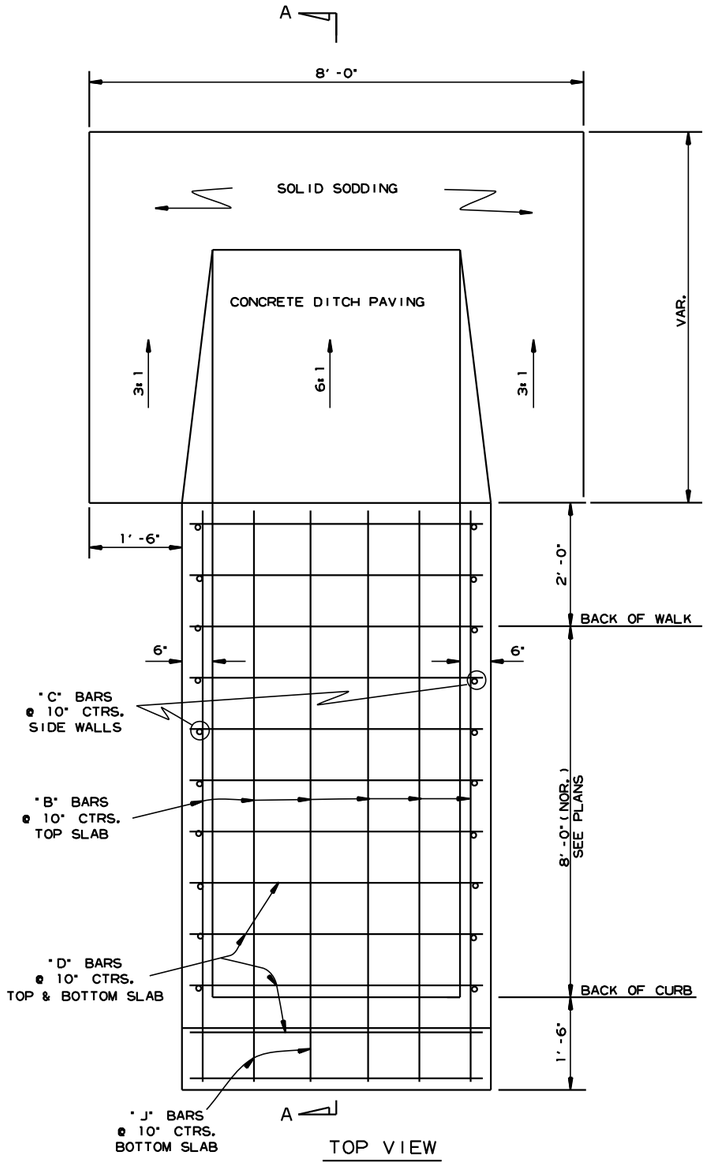

TOP VIEW

BAR DIAGRAM

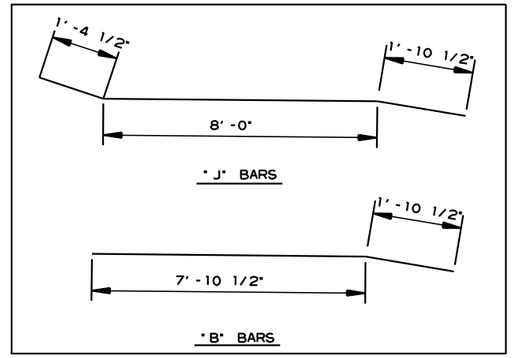

CLASS A CONC.	REINF. STEEL-RDWY. GRADE 60
CU. YDS.	POUND
2.53	207

QUANTITIES FOR INFORMATION ONLY
8' -0" DROP INLET (TYPE SPECIAL)

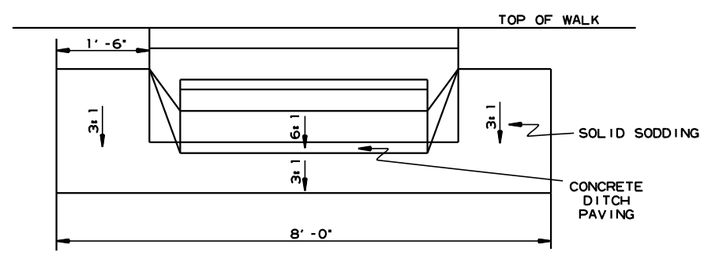

BACK VIEW

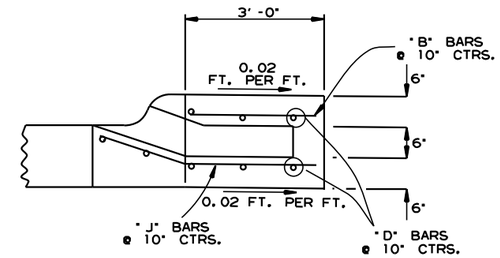

SECTION A-A - EXTENSION

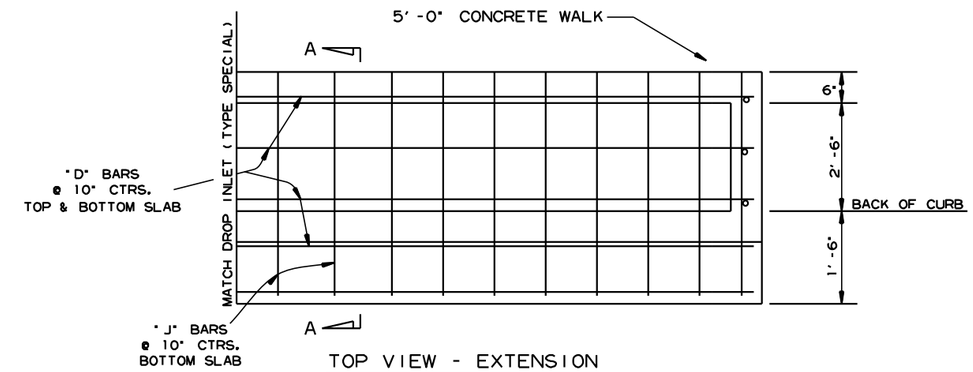

TOP VIEW - EXTENSION

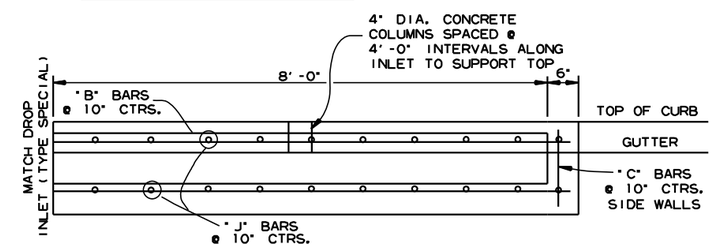

FRONT VIEW - EXTENSION

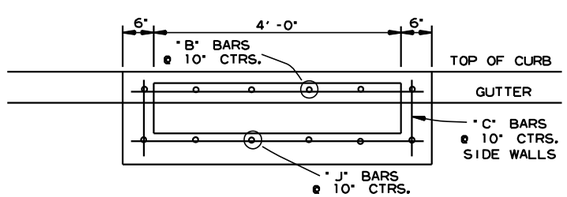

FRONT VIEW

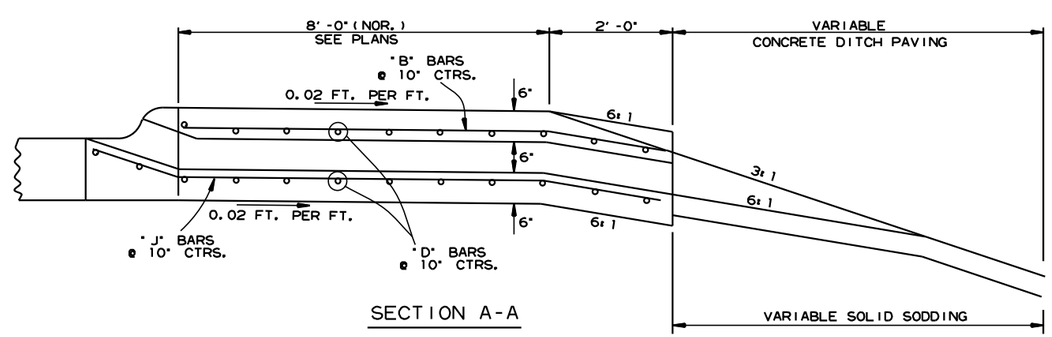

SECTION A-A

GENERAL NOTES:

1. ALL EXPOSED CORNERS TO HAVE 3/4" CHAMFER.
2. ALL REINF. BARS SHALL BE #4 AND HAVE 1-1/2" COVER.
3. DROP INLETS AND EXTENSIONS ON CURVED SECTIONS SHALL CONFORM TO THE CURVATURE OF THE CURB.
4. DURING CONSTRUCTION OF THE ROADWAY THE CONTRACTOR SHALL MAINTAIN DRAINAGE INTO OR AROUND THE DROP INLET AS APPROVED BY THE ENGINEER.
5. PAYMENT FOR CURB AND/OR CURB AND GUTTER WITHIN THE LIMITS OF DROP INLETS AND DROP INLET EXTENSIONS SHALL BE CONSIDERED INCLUDED IN PAYMENT MADE FOR DROP INLETS AND/OR DROP INLET EXTENSIONS.
6. CONCRETE DITCH PAVING & SOLID SODDING SHALL BE PAID FOR SEPARATELY.
7. CONSTRUCT EXTENSIONS UPSTREAM OF DROP INLET UNLESS OTHERWISE SPECIFIED.

DROP INLET (TYPE SPECIAL)

SPECIAL DETAILS

MM41715 7/24/2023
R061613.DGN

DATE REVISED	DATE REVISED	FED.RD. DIST.NO.	STATE	JOB NO.	SHEET NO.	TOTAL SHEETS
		6	ARK.	061613	14	215
		SPECIAL DETAILS				

STATE OF ARKANSAS
LICENSED PROFESSIONAL ENGINEER
No. 11425
TRINITY D. SMITH

Aug 16 2023 3:04 PM

DocuSign

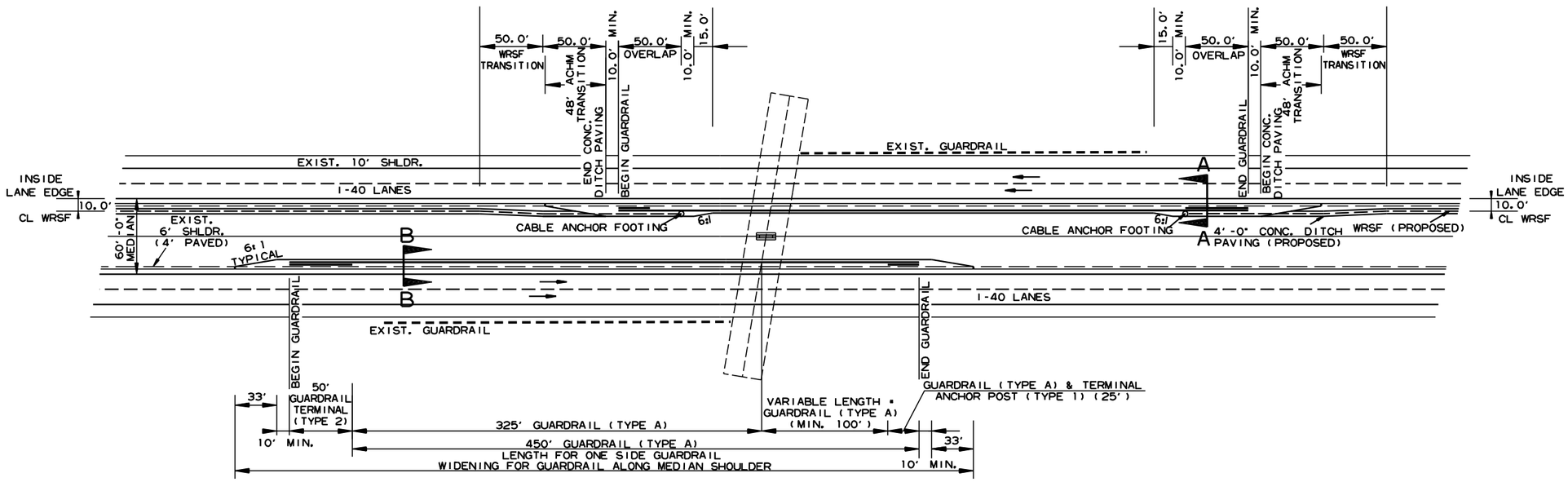

DETAIL AT OVERPASSES

NOTE: REFER TO PLAN SHEETS FOR PLACEMENT OF WIRE ROPE SAFETY FENCE ON EASTBOUND OR WESTBOUND FORESLOPES.

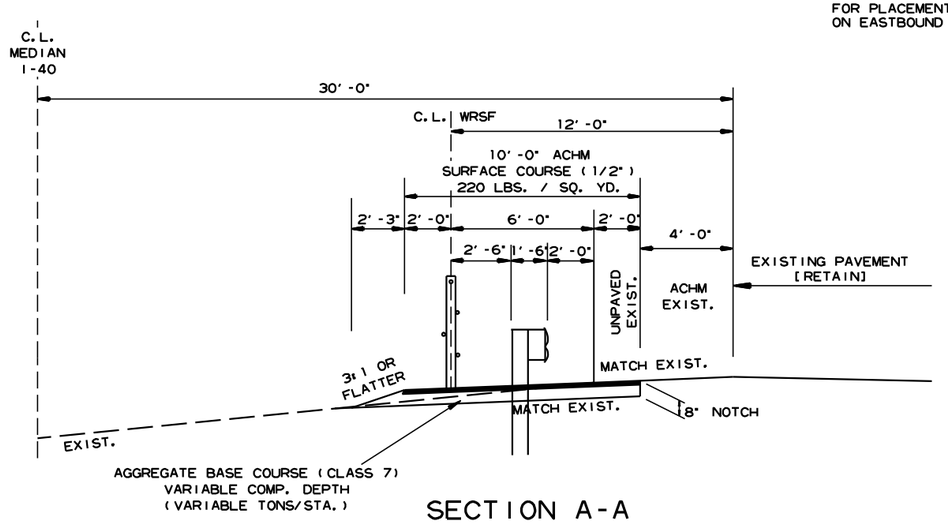

SECTION A-A

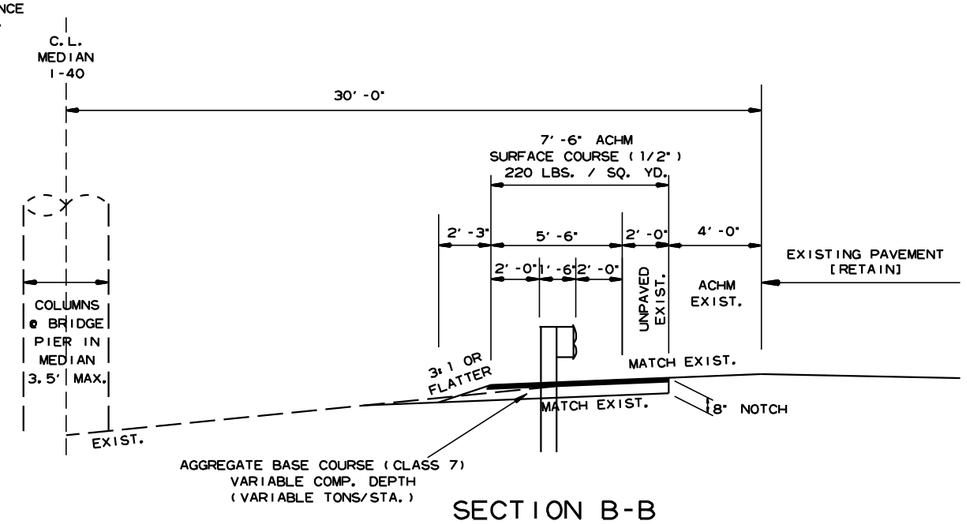

SECTION B-B

DETAILS OF SHOULDER WIDENING FOR GUARDRAIL AND OVERLAPS WITH ENDS OF WIRE ROPE SAFETY FENCE

MM41715 7/24/2023
R061613.DGN

DATE REVISED	DATE REVISED	FED.RD. DIST.NO.	STATE	JOB NO.	SHEET NO.	TOTAL SHEETS
		6	ARK.	061613	15	215
		SPECIAL DETAILS				

STATE OF ARKANSAS
LICENSED PROFESSIONAL ENGINEER
No. 11425
TRINITY D. SMITH

Aug 16 2023 3:04 PM

DocuSign

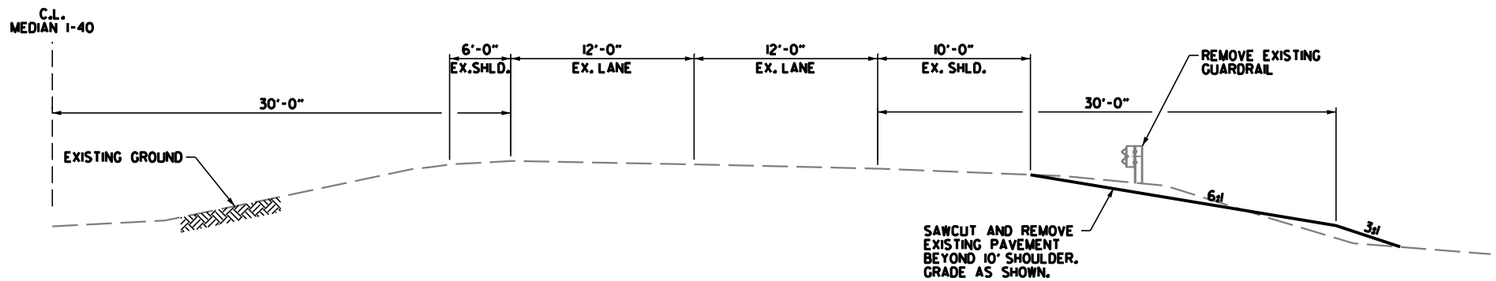

I-40 PARTIAL SECTION

(SHOWN IN DIRECTION OF TRAFFIC)

EB STA. 1001+65.00 TO STA. 1004+14.00
WB STA. 1003+75.00 TO STA. 1004+87.00
WB STA. 1007+30.00 TO STA. 1008+50.00
EB STA. 2001+70.00 TO STA. 2004+48.00
WB STA. 2003+90.00 TO STA. 2005+00.00
WB STA. 2006+81.00 TO STA. 2008+00.00

NOTES:

REFER TO CROSS SECTIONS FOR DEVIATIONS FROM NORMAL SLOPES. NO CHANGES SHALL BE MADE FROM THE PLANNED SLOPES WITHOUT THE APPROVAL OF THE ENGINEER.

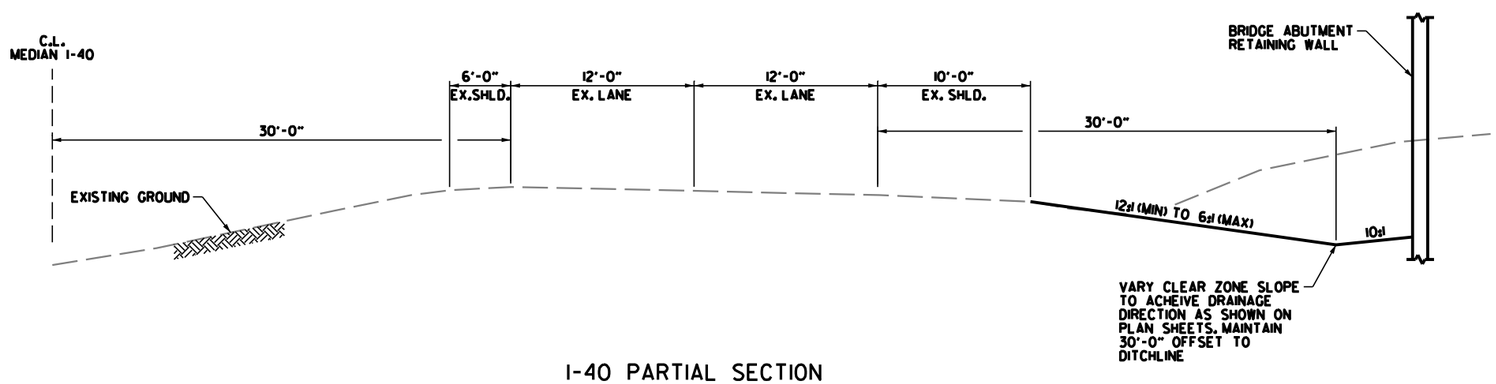

I-40 PARTIAL SECTION

(SHOWN IN DIRECTION OF TRAFFIC)

EB STA. 1004+14.00 TO STA. 1005+82.00
WB STA. 1004+87.00 TO STA. 1007+30.00
EB STA. 2004+48.00 TO STA. 2006+30.00
WB STA. 2005+00.00 TO STA. 2006+81.00

MM41715 7/24/2023
R061613.DGN

DATE REVISED	DATE REVISED	FED.RD. DIST.NO.	STATE	JOB NO.	SHEET NO.	TOTAL SHEETS
		6	ARK.	061613	16	215
		SPECIAL DETAILS				

STATE OF ARKANSAS
LICENSED PROFESSIONAL ENGINEER
No. 11425
TRINITY D. SMITH

Aug 16 2023 3:05 PM

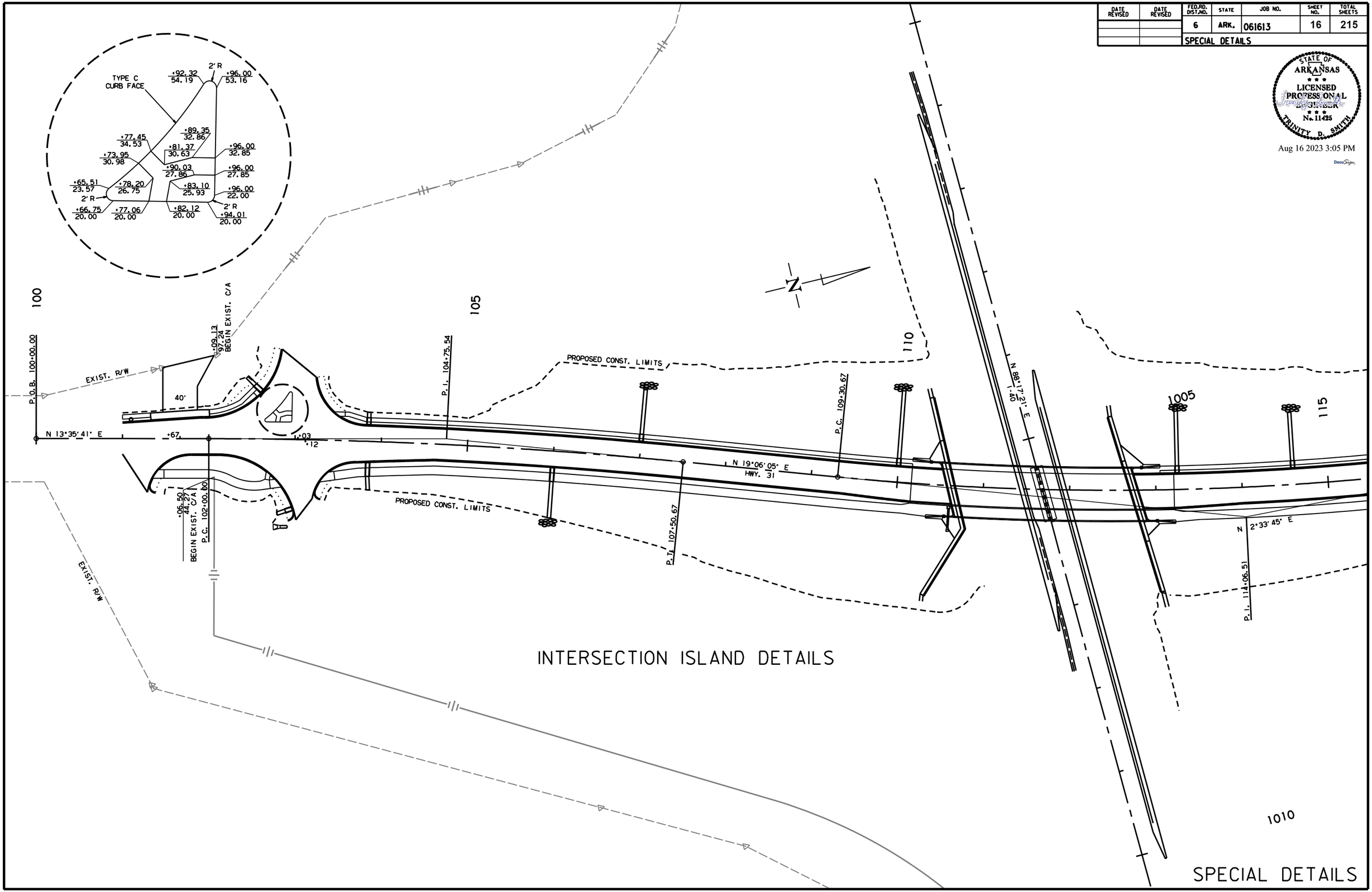

MM41715 7/24/2023
R061613.DGN

DATE REVISED	DATE REVISED	FED.RD. DIST.NO.	STATE	JOB NO.	SHEET NO.	TOTAL SHEETS
		6	ARK.	061613	17	215
		SPECIAL DETAILS				

STATE OF ARKANSAS
LICENSED PROFESSIONAL ENGINEER
No. 11425
TRINITY D. SMITH

Aug 16 2023 3:05 PM

DocuSign

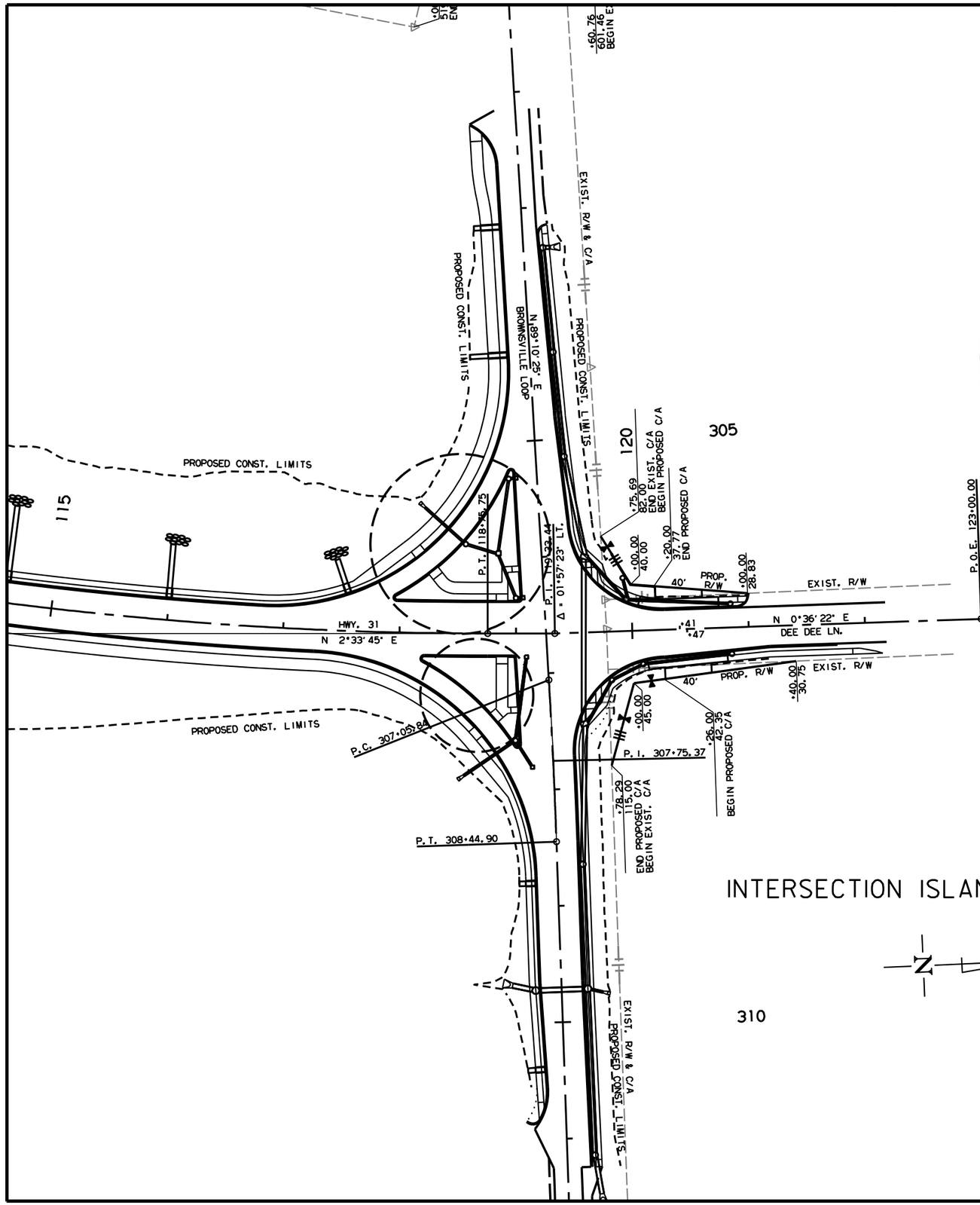

INTERSECTION ISLAND DETAILS

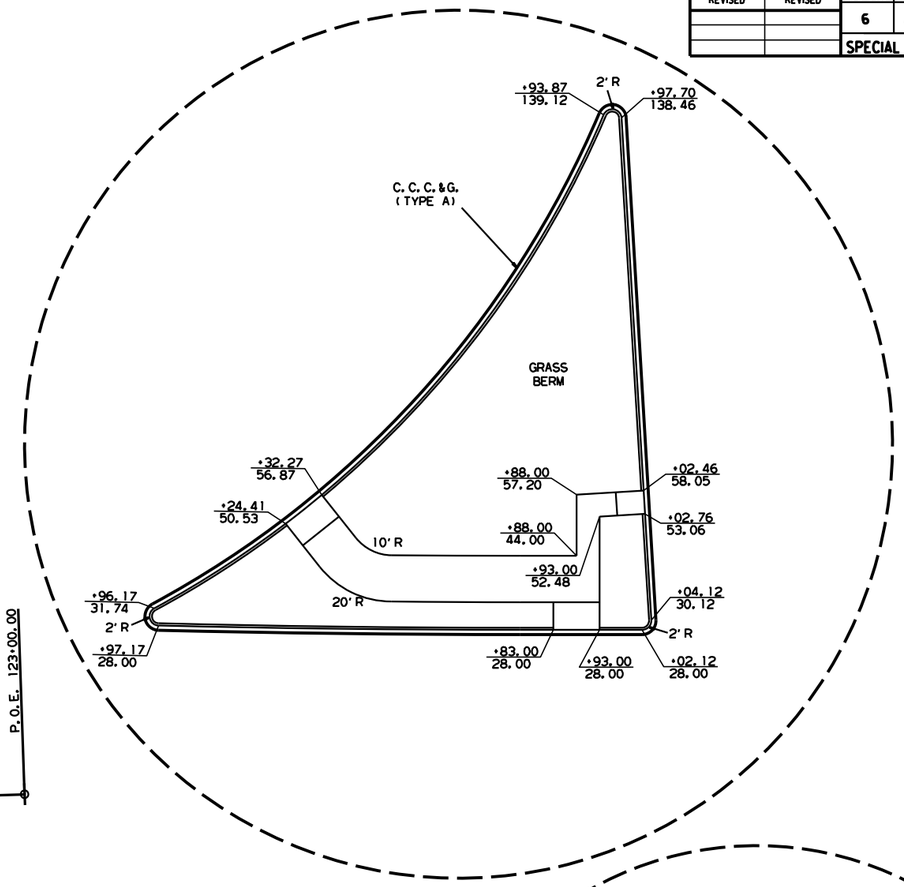

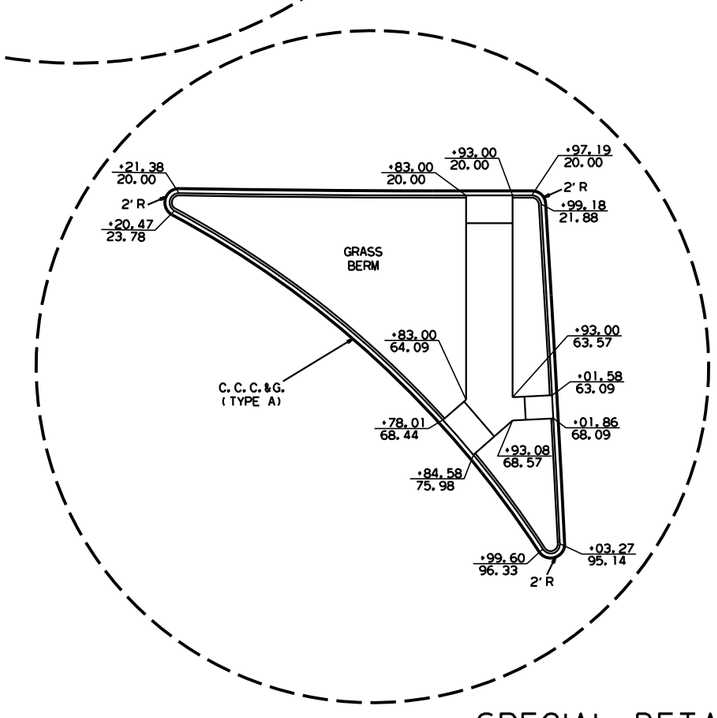

SPECIAL DETAILS

MM41715 7/24/2023
R06I613.DGN

DATE REVISED	DATE REVISED	FED.RD. DIST.NO.	STATE	JOB NO.	SHEET NO.	TOTAL SHEETS
		6	ARK.	061613	18	215
		SPECIAL DETAILS				

STATE OF ARKANSAS
LICENSED PROFESSIONAL ENGINEER
No. 11425
TRINITY D. SMITH

Aug 16 2023 3:05 PM

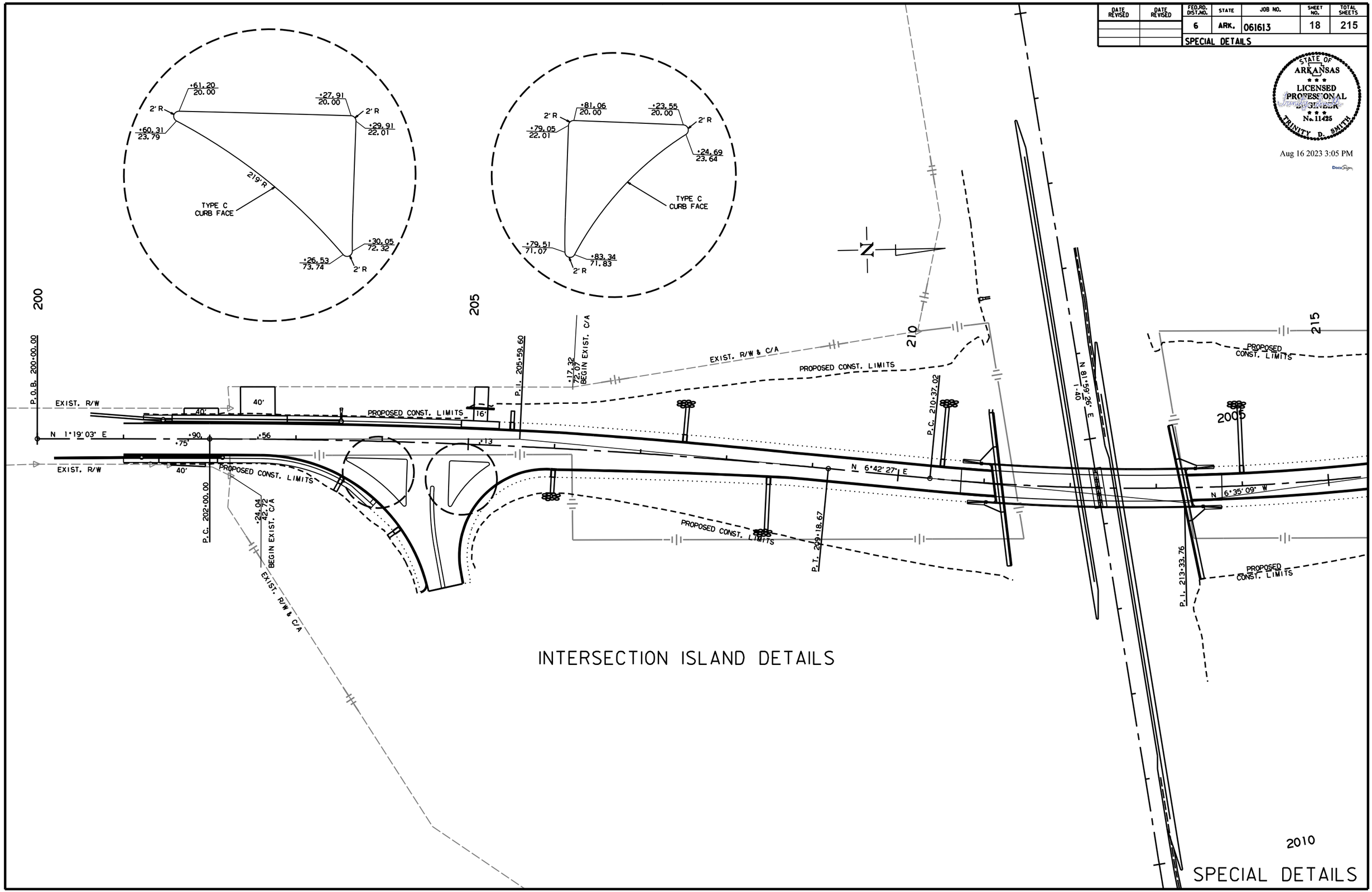

INTERSECTION ISLAND DETAILS

SPECIAL DETAILS

MM41715 7/24/2023
R061613.DGN

DATE REVISED	DATE REVISED	FED.RD. DIST.NO.	STATE	JOB NO.	SHEET NO.	TOTAL SHEETS
		6	ARK.	061613	19	215
		TEMPORARY EROSION CONTROL DETAILS				

STATE OF ARKANSAS
LICENSED PROFESSIONAL ENGINEER
No. 11425
TRINITY D. SMITH

Aug 16 2023 3:05 PM

DocuSign

LEGEND

(E-6) = ROCK DITCH CHECKS

(E-13) = FILTER SOCK (12")

NOTE: PERIMETER CONTROLS SHALL BE PLACED AS CLEARING AND GRUBBING OPERATIONS ARE STARTED. RETAIN ALL EROSION CONTROL DEVICES UNTIL END OF CONSTRUCTION, UNLESS OTHERWISE NOTED.

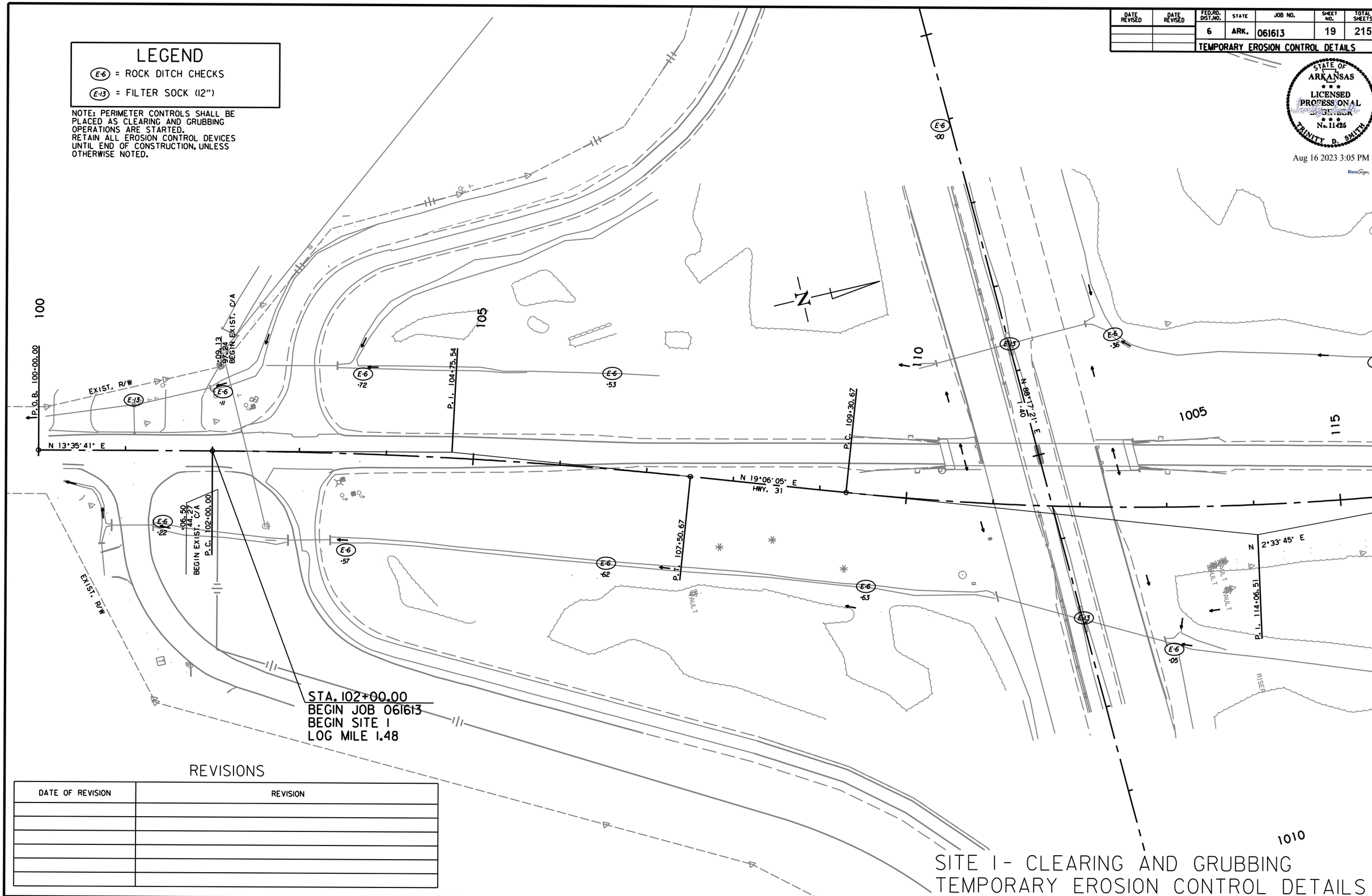

REVISIONS

DATE OF REVISION	REVISION

SITE 1- CLEARING AND GRUBBING
TEMPORARY EROSION CONTROL DETAILS

MM41715 7/24/2023
R061613.DGN

DATE REVISED	DATE REVISED	FED.RD. DIST.NO.	STATE	JOB NO.	SHEET NO.	TOTAL SHEETS
		6	ARK.	061613	20	215

TEMPORARY EROSION CONTROL DETAILS

STATE OF ARKANSAS
LICENSED PROFESSIONAL ENGINEER
No. 11425
TRINITY D. SMITH

Aug 16 2023 3:05 PM

DocuSign

LEGEND

E-6 = ROCK DITCH CHECKS

NOTE: PERIMETER CONTROLS SHALL BE PLACED AS CLEARING AND GRUBBING OPERATIONS ARE STARTED. RETAIN ALL EROSION CONTROL DEVICES UNTIL END OF CONSTRUCTION, UNLESS OTHERWISE NOTED.

REVISIONS

DATE OF REVISION	REVISION

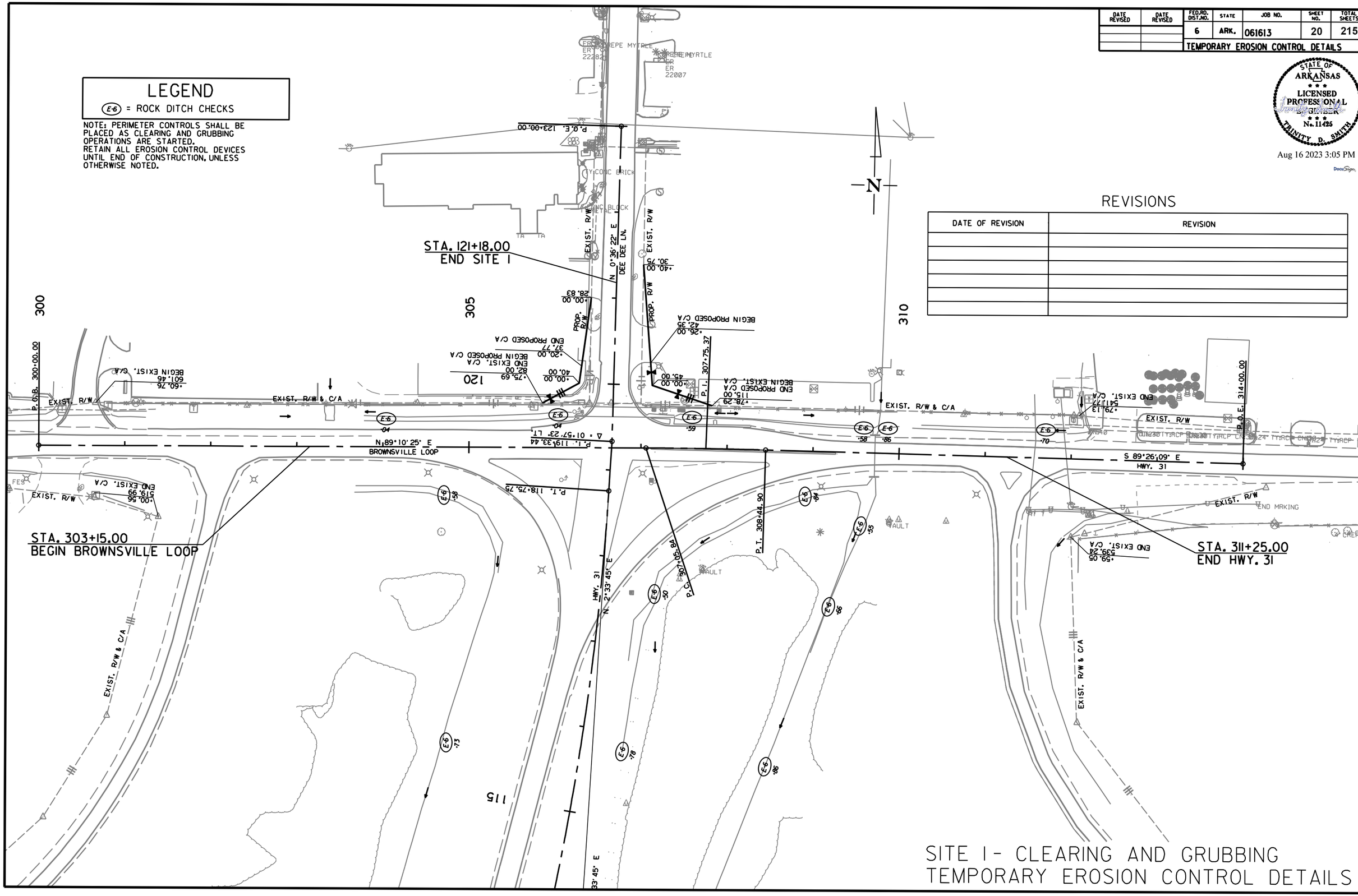

SITE I - CLEARING AND GRUBBING
TEMPORARY EROSION CONTROL DETAILS

MM41715 7/24/2023
R061613.DGN

DATE REVISED	DATE REVISED	FED.RD. DIST.NO.	STATE	JOB NO.	SHEET NO.	TOTAL SHEETS
		6	ARK.	061613	21	215
		TEMPORARY EROSION CONTROL DETAILS				

STATE OF ARKANSAS
LICENSED PROFESSIONAL ENGINEER
No. 11425
TRINITY D. SMITH

Aug 16 2023 3:06 PM

DocuSign

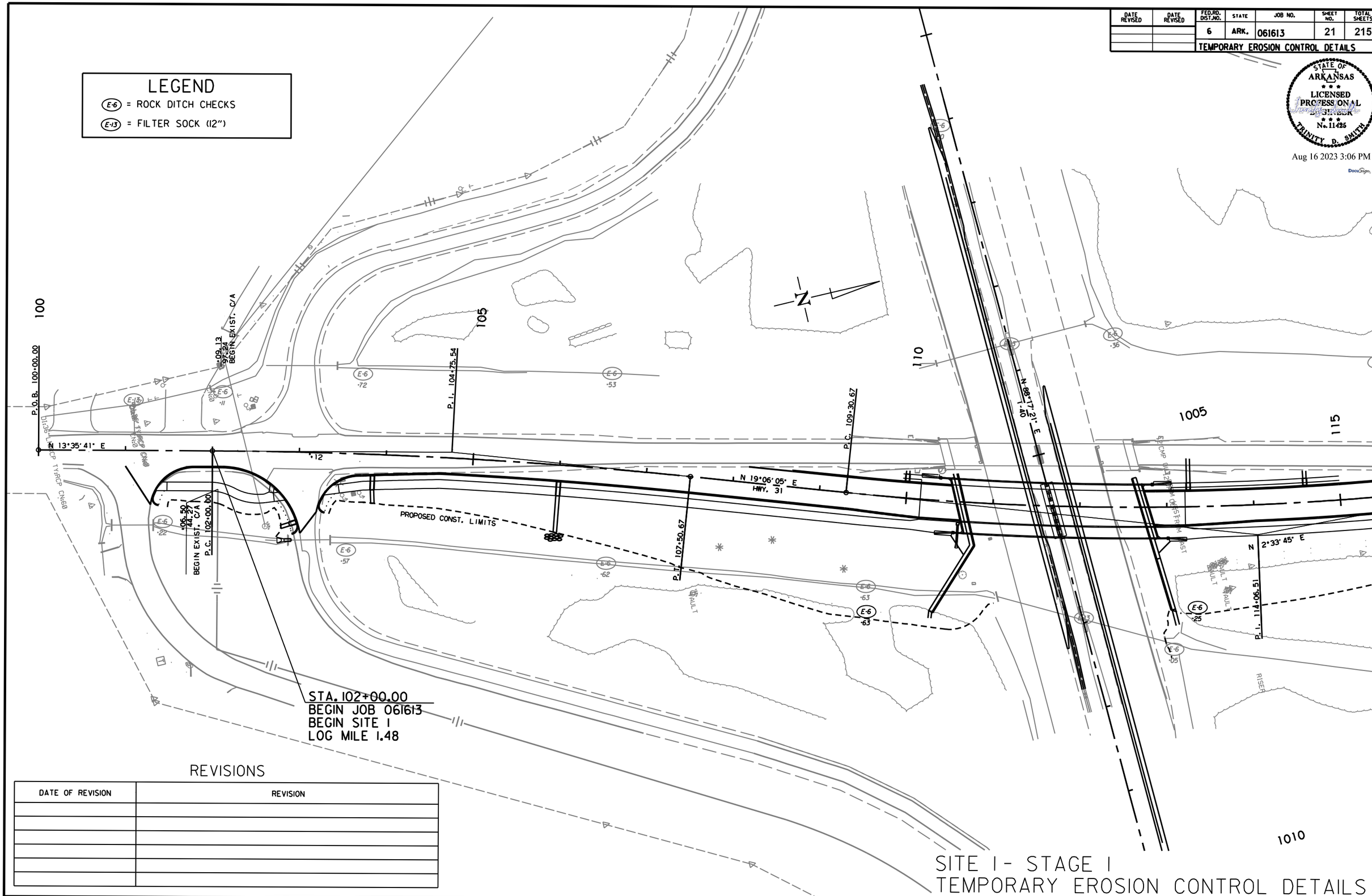

REVISIONS

DATE OF REVISION	REVISION

SITE 1 - STAGE 1
TEMPORARY EROSION CONTROL DETAILS

MM41715 7/24/2023
R061613.DGN

DATE REVISED	DATE REVISED	FED.RD. DIST.NO.	STATE	JOB NO.	SHEET NO.	TOTAL SHEETS
		6	ARK.	061613	22	215
		TEMPORARY EROSION CONTROL DETAILS				

STATE OF ARKANSAS
LICENSED PROFESSIONAL ENGINEER
No. 11425
TRINITY D. SMITH

Aug 16 2023 3:08 PM

DocuSign

LEGEND

(E-6) = ROCK DITCH CHECKS

(E-13) = FILTER SOCK (12")

REVISIONS

DATE OF REVISION	REVISION

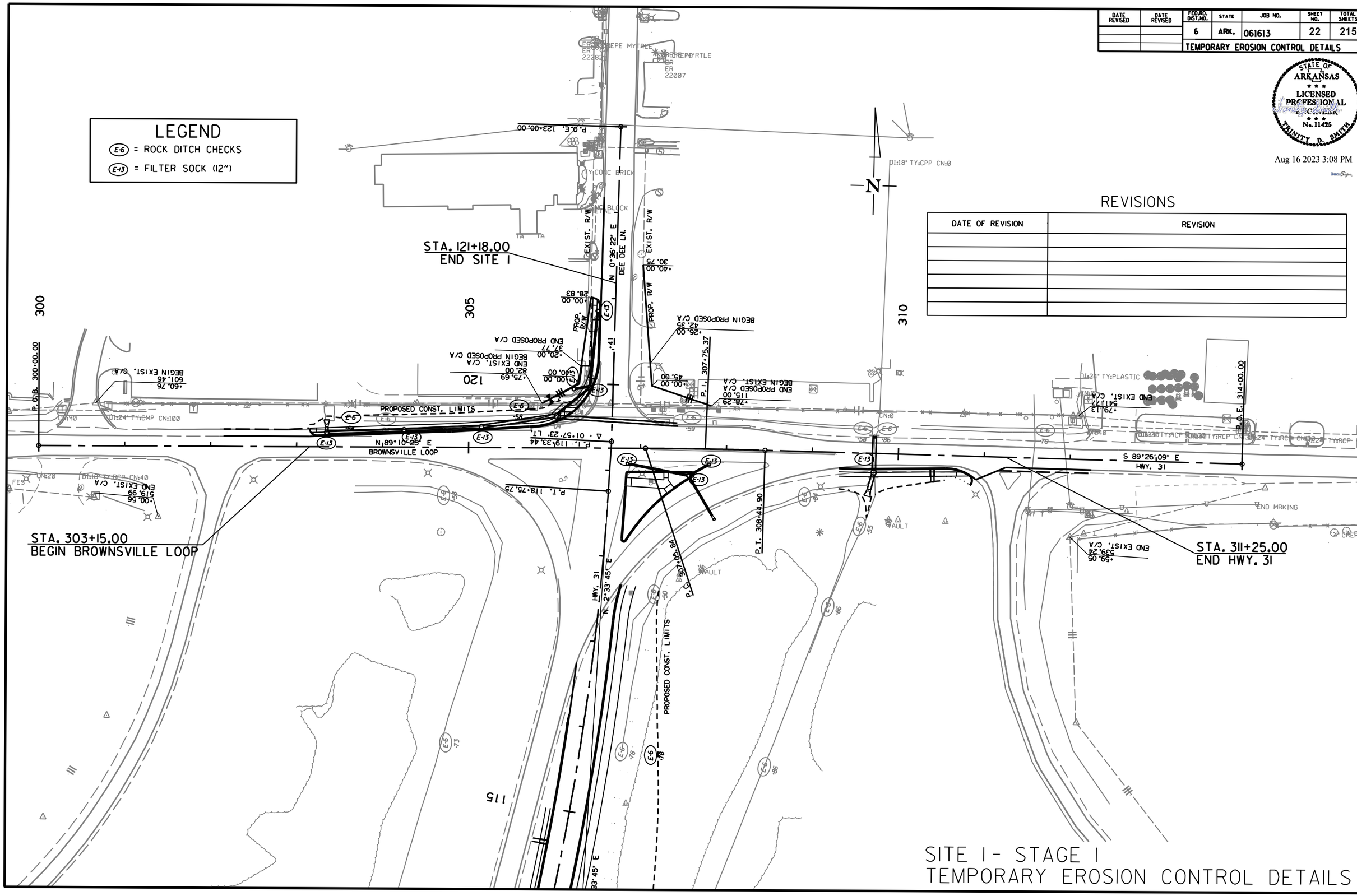

SITE 1- STAGE 1
TEMPORARY EROSION CONTROL DETAILS

MM41715 7/24/2023
R061613.DGN

DATE REVISED	DATE REVISED	FED.RD. DIST.NO.	STATE	JOB NO.	SHEET NO.	TOTAL SHEETS
		6	ARK.	061613	23	215
		TEMPORARY EROSION CONTROL DETAILS				

STATE OF ARKANSAS
LICENSED PROFESSIONAL ENGINEER
No. 11425
TRINITY D. SMITH

Aug 16 2023 3:09 PM

DocuSign

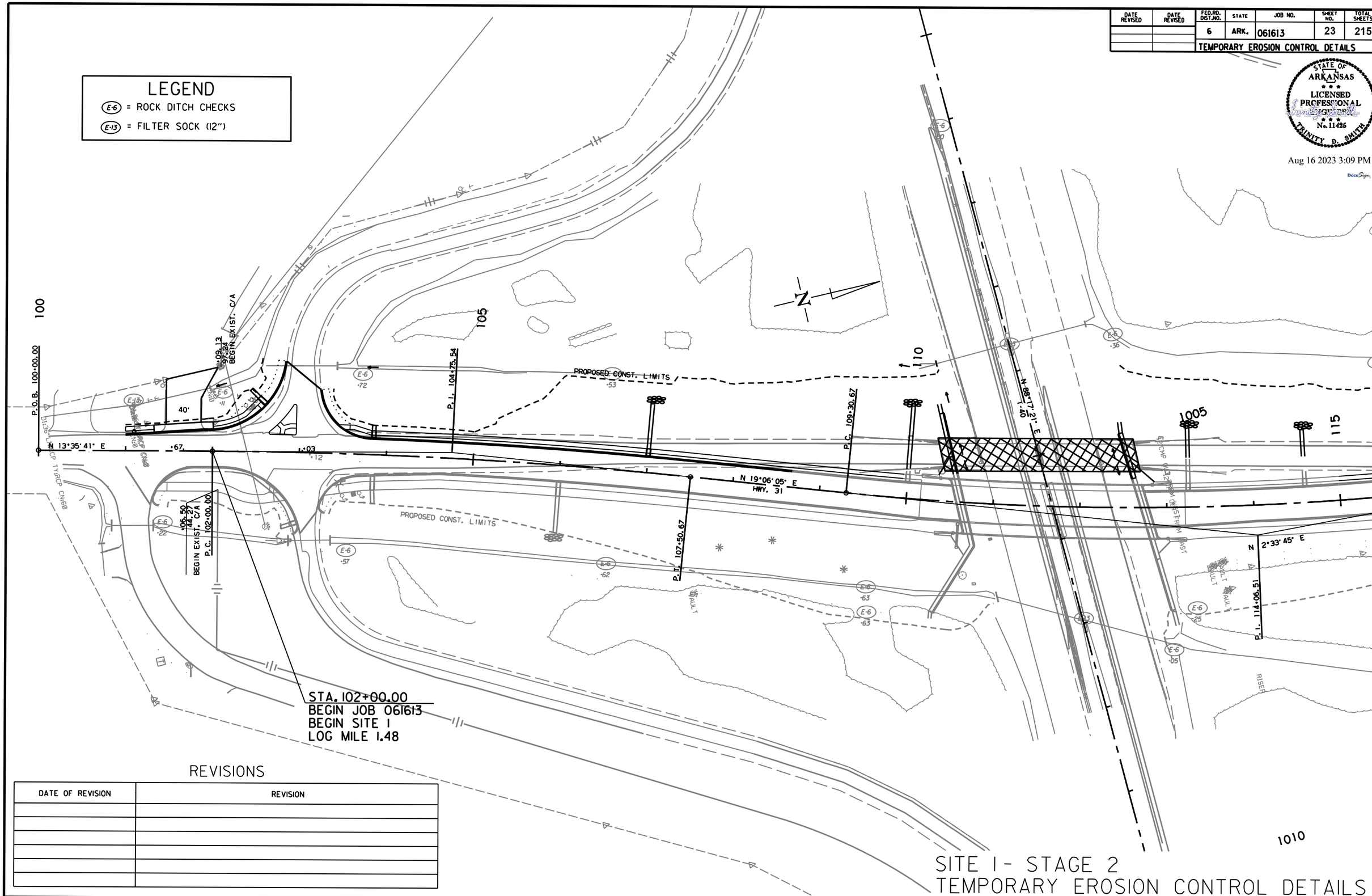

REVISIONS

DATE OF REVISION	REVISION

SITE 1 - STAGE 2
TEMPORARY EROSION CONTROL DETAILS

MM41715 7/24/2023
R061613.DGN

DATE REVISED	DATE REVISED	FED.RD. DIST.NO.	STATE	JOB NO.	SHEET NO.	TOTAL SHEETS
		6	ARK.	061613	24	215
		TEMPORARY EROSION CONTROL DETAILS				

STATE OF ARKANSAS
LICENSED PROFESSIONAL ENGINEER
No. 11425
TRINITY D. SMITH

Aug 16 2023 3:09 PM

DocuSign

LEGEND

(E-6) = ROCK DITCH CHECKS

(E-13) = FILTER SOCK (12")

REVISIONS

DATE OF REVISION	REVISION

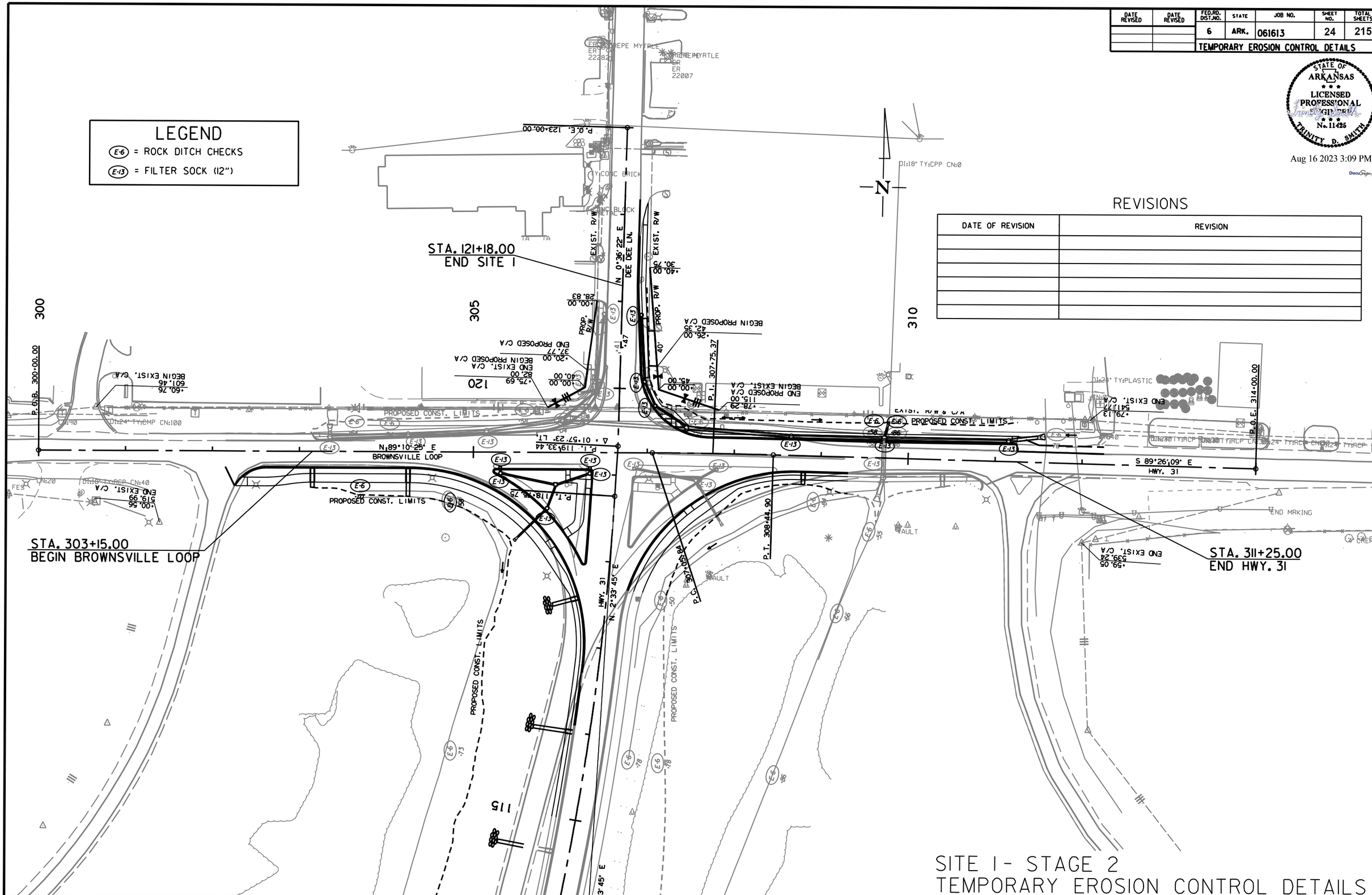

SITE 1- STAGE 2
TEMPORARY EROSION CONTROL DETAILS

MM41715 7/24/2023
R061613.DGN

DATE REVISED	DATE REVISED	FED.RD. DIST.NO.	STATE	JOB NO.	SHEET NO.	TOTAL SHEETS
		6	ARK.	061613	25	215
		TEMPORARY EROSION CONTROL DETAILS				

STATE OF ARKANSAS
LICENSED PROFESSIONAL ENGINEER
No. 11425
TRINITY D. SMITH

Aug 16,2023 3:09 PM

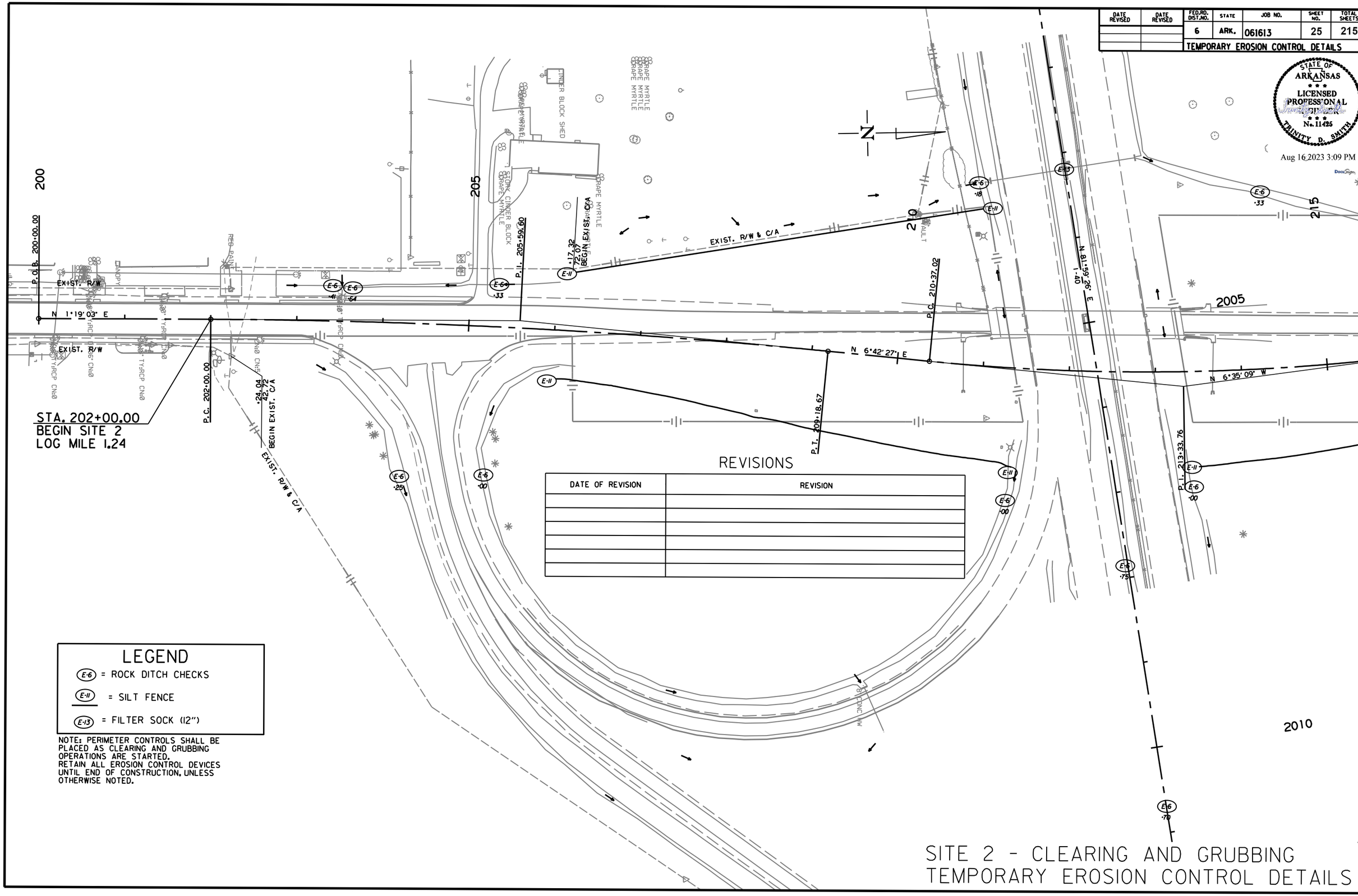

REVISIONS

DATE OF REVISION	REVISION

LEGEND

E-6 = ROCK DITCH CHECKS

E-11 = SILT FENCE

E-13 = FILTER SOCK (12")

NOTE: PERIMETER CONTROLS SHALL BE PLACED AS CLEARING AND GRUBBING OPERATIONS ARE STARTED.
RETAIN ALL EROSION CONTROL DEVICES UNTIL END OF CONSTRUCTION, UNLESS OTHERWISE NOTED.

SITE 2 - CLEARING AND GRUBBING TEMPORARY EROSION CONTROL DETAILS

MM41715 7/24/2023
R061613.DGN

DATE REVISED	DATE REVISED	FED.RD. DIST.NO.	STATE	JOB NO.	SHEET NO.	TOTAL SHEETS
		6	ARK.	061613	26	215
		TEMPORARY EROSION CONTROL DETAILS				

STATE OF ARKANSAS
LICENSED PROFESSIONAL ENGINEER
No. 11425
TRINITY D. SMITH

Aug 16 2023 3:09 PM

DocuSign

LEGEND

(E-6) = ROCK DITCH CHECKS

(E-11) = SILT FENCE

NOTE: PERIMETER CONTROLS SHALL BE PLACED AS CLEARING AND GRUBBING OPERATIONS ARE STARTED.
RETAIN ALL EROSION CONTROL DEVICES UNTIL END OF CONSTRUCTION, UNLESS OTHERWISE NOTED.

REVISIONS

DATE OF REVISION	REVISION

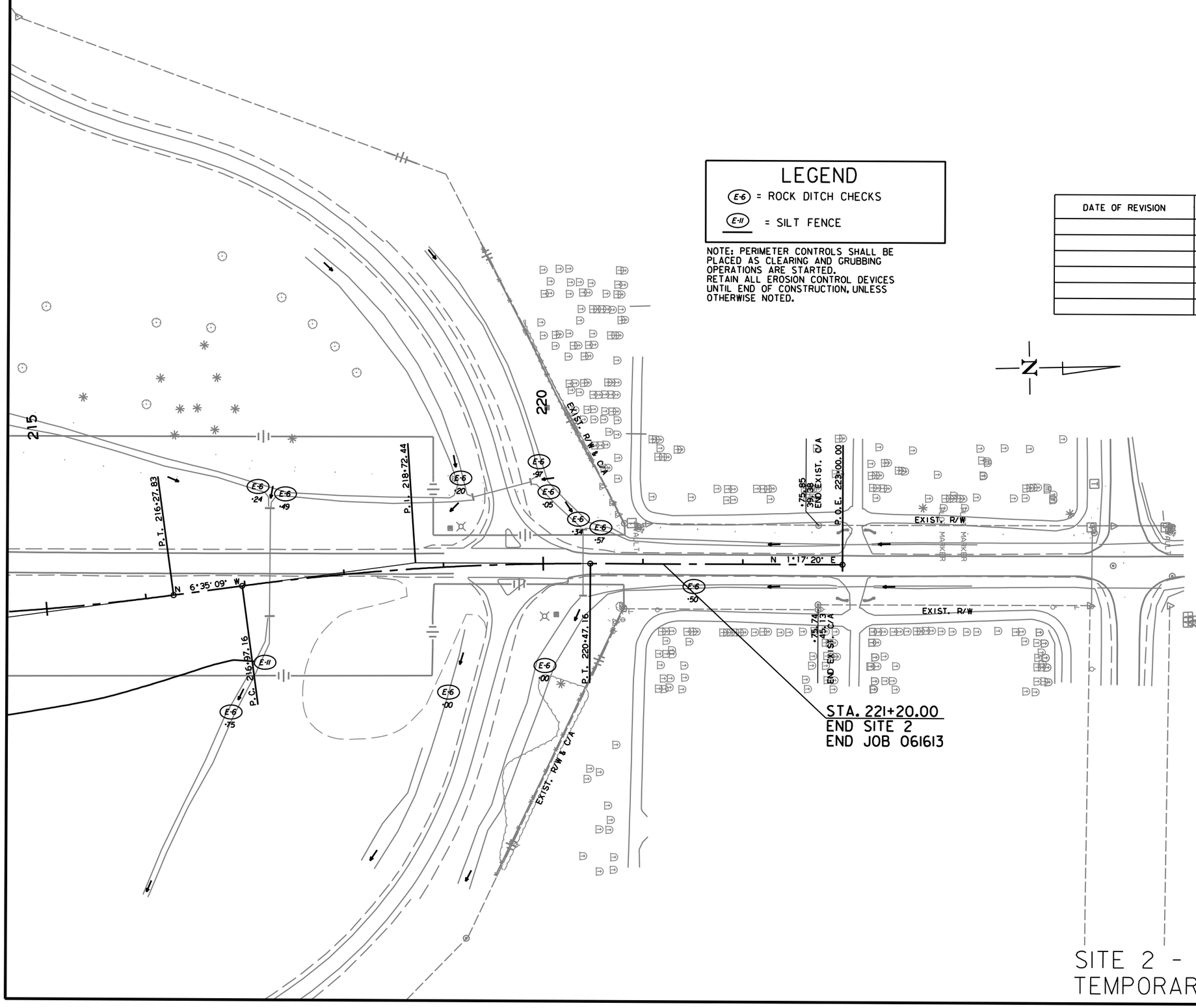

SITE 2 - CLEARING AND GRUBBING
TEMPORARY EROSION CONTROL DETAILS

MM41715 7/24/2023
R061613.DGN

DATE REVISED	DATE REVISED	FED.RD. DIST.NO.	STATE	JOB NO.	SHEET NO.	TOTAL SHEETS
		6	ARK.	061613	27	215
		TEMPORARY EROSION CONTROL DETAILS				

STATE OF ARKANSAS
LICENSED PROFESSIONAL ENGINEER
No. 11425
TRINITY D. SMITH

Aug 16 2023 3:09 PM

DocuSign

REVISIONS

DATE OF REVISION	REVISION

LEGEND

- E-6 = ROCK DITCH CHECKS
- E-11 = SILT FENCE
- E-13 = FILTER SOCK (12")

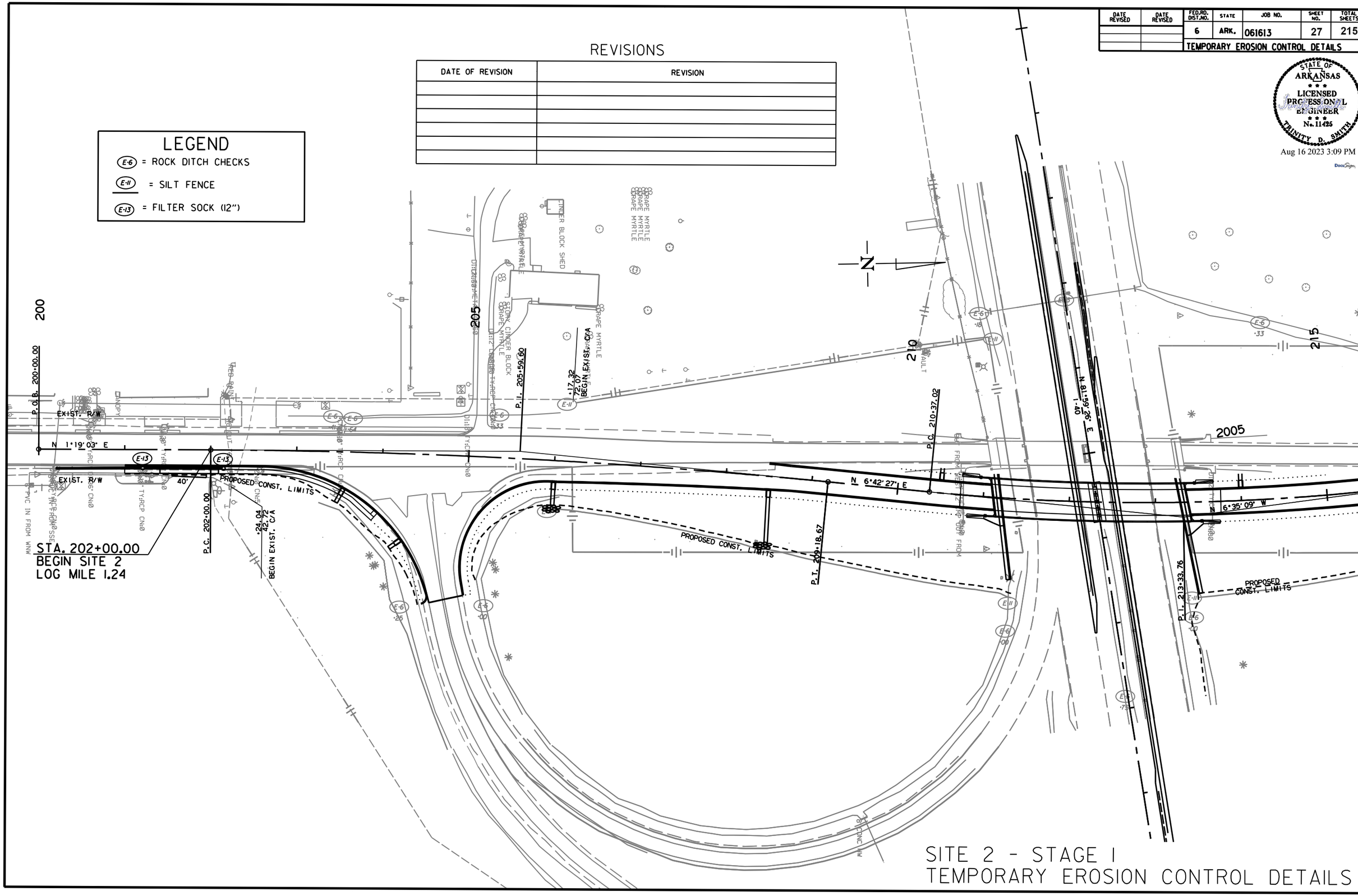

SITE 2 - STAGE 1
TEMPORARY EROSION CONTROL DETAILS

MM41715 7/24/2023
R061613.DGN

DATE REVISED	DATE REVISED	FED.RD. DIST.NO.	STATE	JOB NO.	SHEET NO.	TOTAL SHEETS
		6	ARK.	061613	28	215
		TEMPORARY EROSION CONTROL DETAILS				

STATE OF ARKANSAS
LICENSED PROFESSIONAL ENGINEER
No. 11425
TRINITY D. SMITH

Aug 16 2023 3:10 PM

DocuSign

LEGEND

- (E-6) = ROCK DITCH CHECKS
- (E-11) = SILT FENCE
- (E-13) = FILTER SOCK (12")

REVISIONS

DATE OF REVISION	REVISION

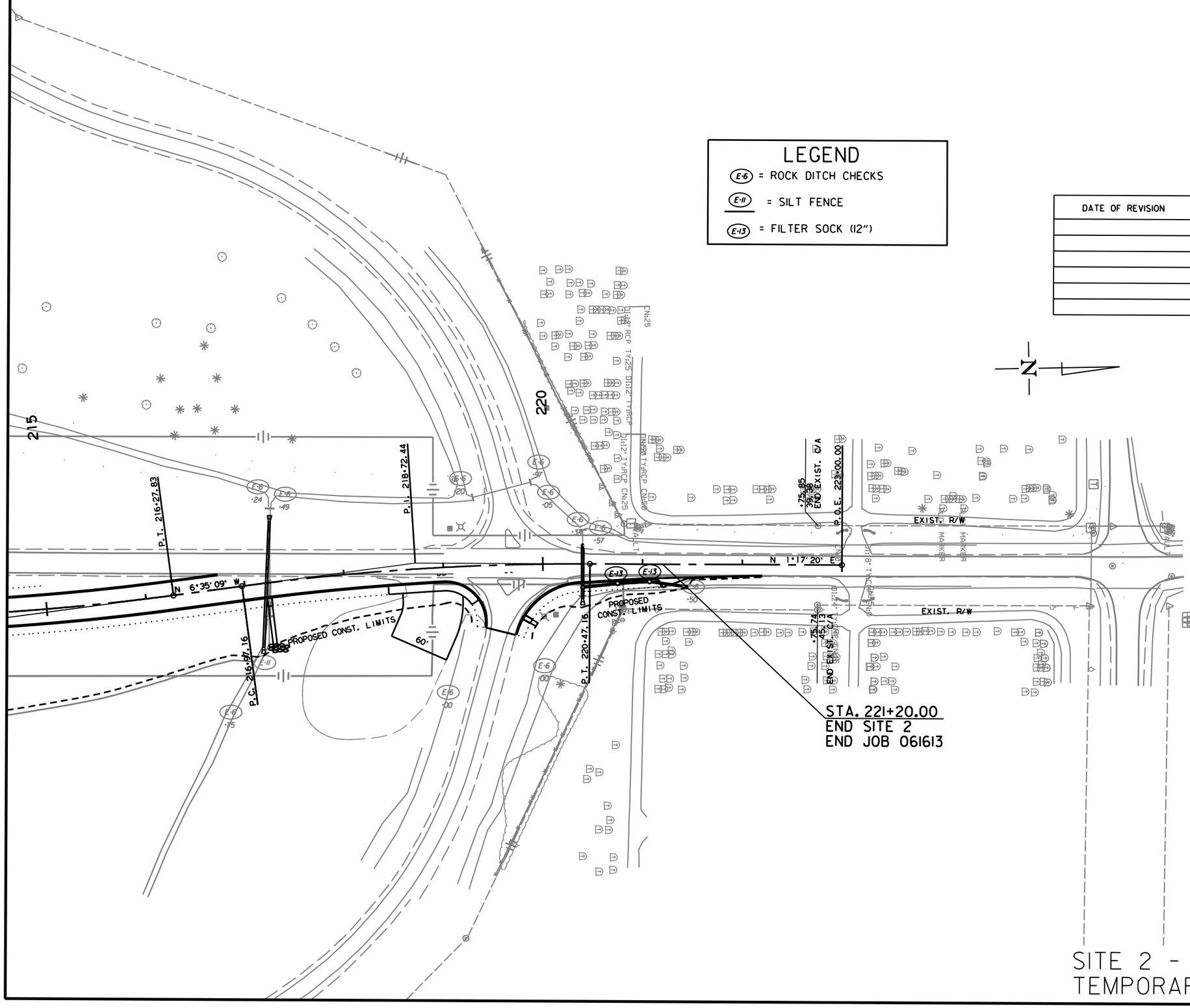

SITE 2 - STAGE 1
TEMPORARY EROSION CONTROL DETAILS

MM41715 7/24/2023
R061613.DGN

DATE REVISED	DATE REVISED	FED.RD. DIST.NO.	STATE	JOB NO.	SHEET NO.	TOTAL SHEETS
		6	ARK.	061613	29	215
		TEMPORARY EROSION CONTROL DETAILS				

STATE OF ARKANSAS
LICENSED PROFESSIONAL ENGINEER
No. 11425
TRINITY D. SMITH

Aug 16 2023 3:10 PM

DocuSign

REVISIONS

DATE OF REVISION	REVISION

LEGEND

- E-6 = ROCK DITCH CHECKS
- E-11 = SILT FENCE
- E-13 = FILTER SOCK (12")

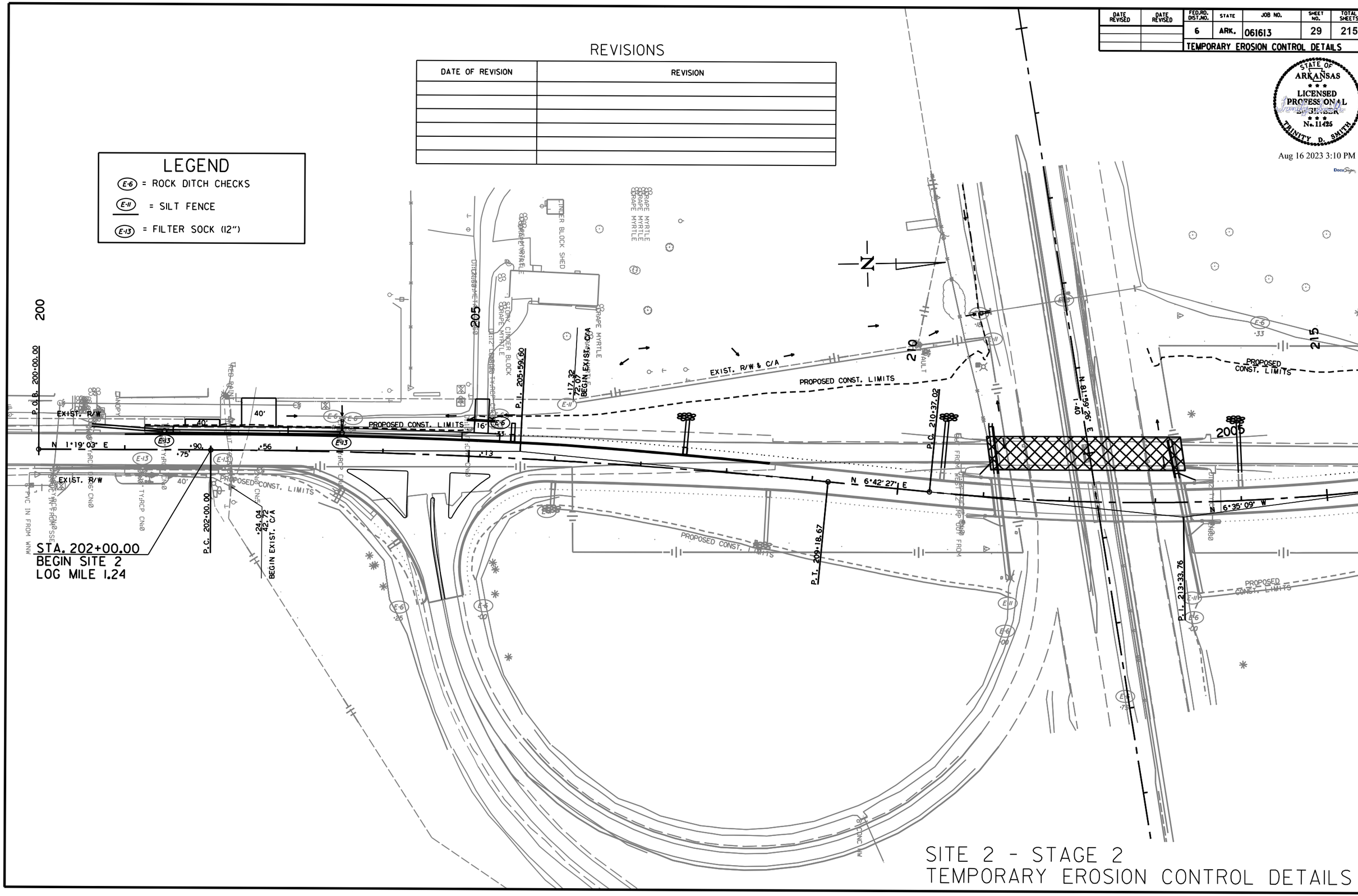

MM41715 7/24/2023
R061613.DGN

DATE REVISED	DATE REVISED	FED.RD. DIST.NO.	STATE	JOB NO.	SHEET NO.	TOTAL SHEETS
		6	ARK.	061613	30	215
		TEMPORARY EROSION CONTROL DETAILS				

STATE OF ARKANSAS
LICENSED PROFESSIONAL ENGINEER
No. 11425
TRINITY D. SMITH

Aug 16 2023 3:10 PM

DocuSign

LEGEND

- (E-6) = ROCK DITCH CHECKS
- (E-11) = SILT FENCE
- (E-13) = FILTER SOCK (12")

REVISIONS

DATE OF REVISION	REVISION

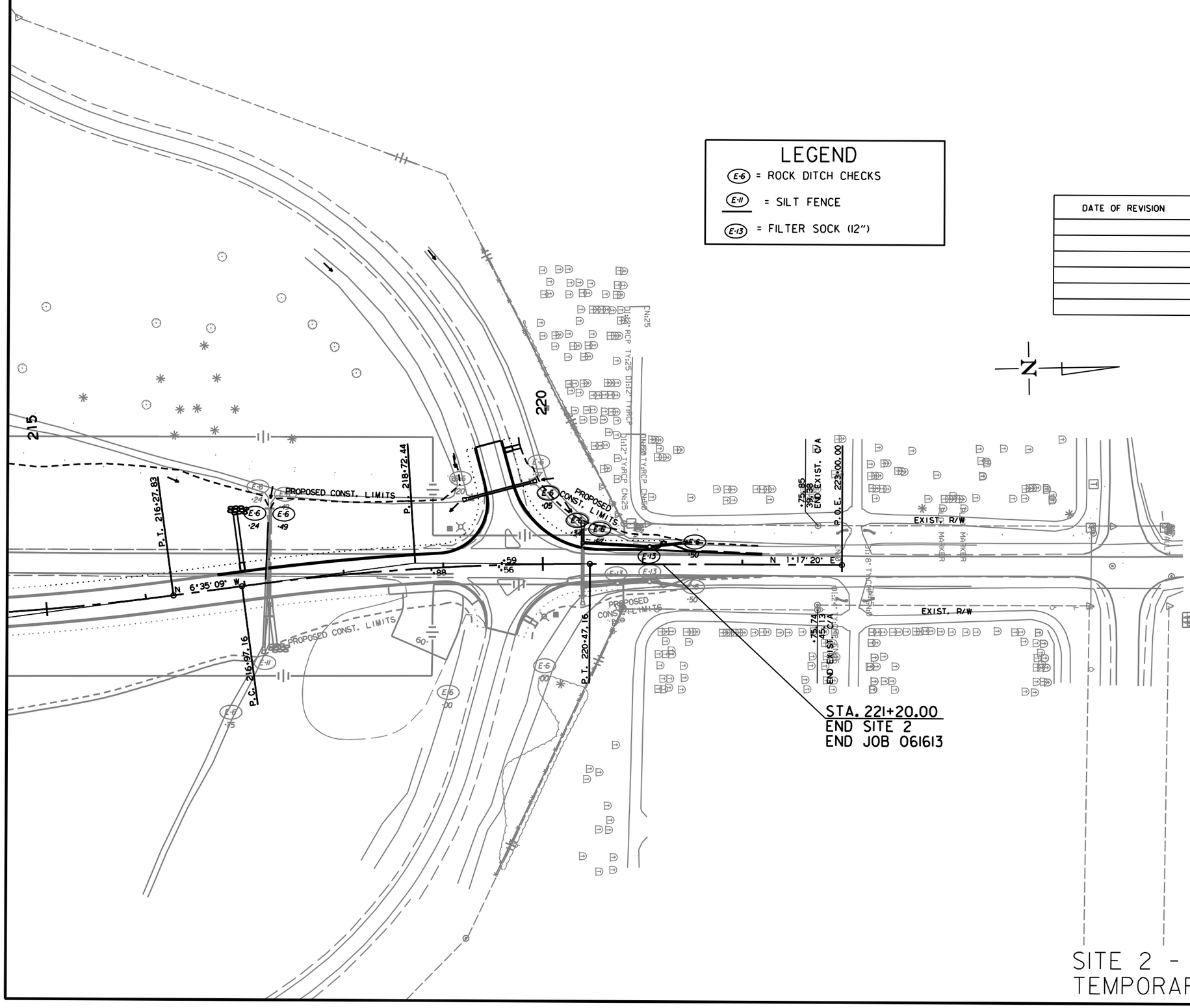

SITE 2 - STAGE 2
TEMPORARY EROSION CONTROL DETAILS

MM41715 7/24/2023
R061613.DGN

DATE REVISED	DATE REVISED	FED.RD. DIST.NO.	STATE	JOB NO.	SHEET NO.	TOTAL SHEETS
		6	ARK.	061613	31	215
		MAINTENANCE OF TRAFFIC DETAILS				

STATE OF ARKANSAS
LICENSED PROFESSIONAL ENGINEER
No. 11425
TRINITY D. SMITH

Aug 16 2023 3:10 PM

M.S. N.S. = MOBILE SPEED NOTIFICATION SYSTEM

P.R. T.S. = PHOTO RADAR TRAILER SYSTEM

**NOTE: THE PHOTO RADAR TRAILER SYSTEM TO BE FURNISHED AND PLACED BY STATE FORCES.

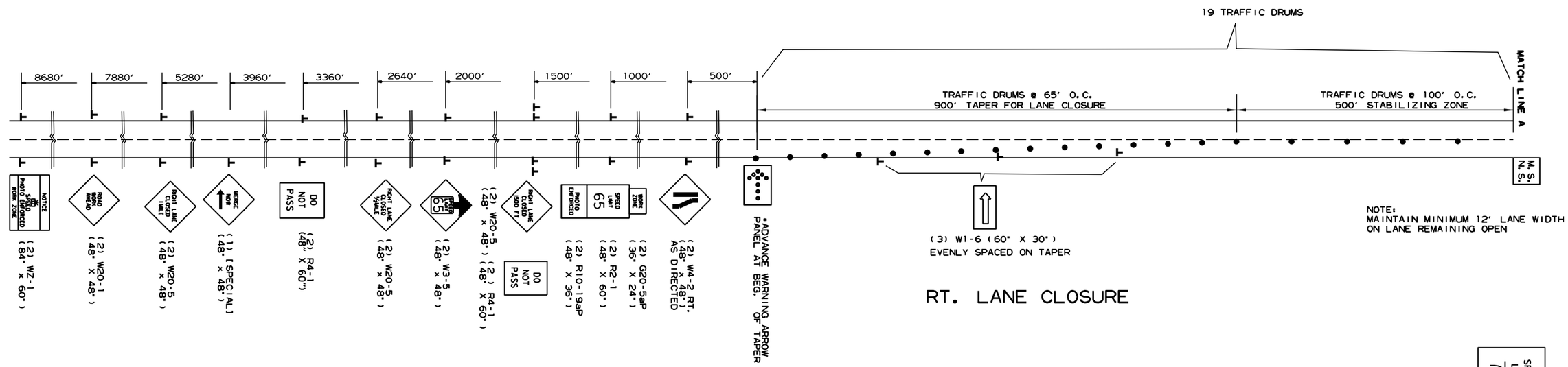

RT. LANE CLOSURE

*PORTABLE CHANGEABLE MESSAGE SIGN TO BE USED IF AND WHERE DIRECTED BY THE ENGINEER

*TO BE PLACED AT MINIMUM OFFSET OF 12' FROM EDGE OF THROUGH LANE OF TRAFFIC, OR FURTHER IF PRACTICAL.

SPEED LIMIT SIGNS ARE ALSO PROVIDED FOR PLACEMENT PAST ENTRANCE RAMPS WITHIN THE WORK ZONE.

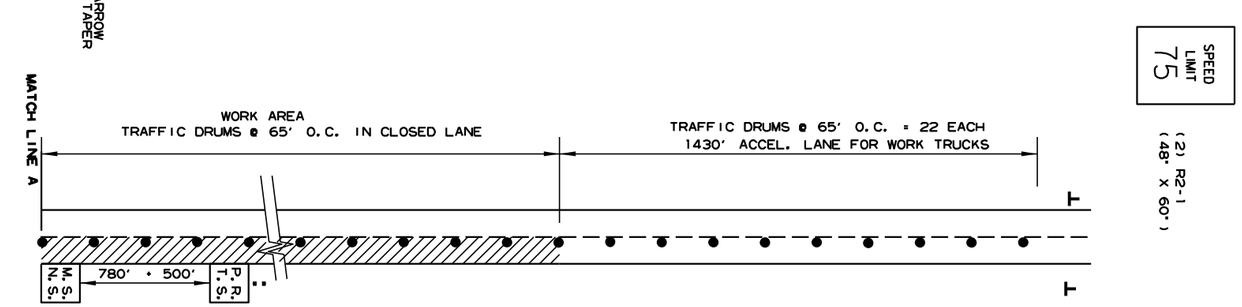

DIVERSION FOR RT. LANE WORK ZONE

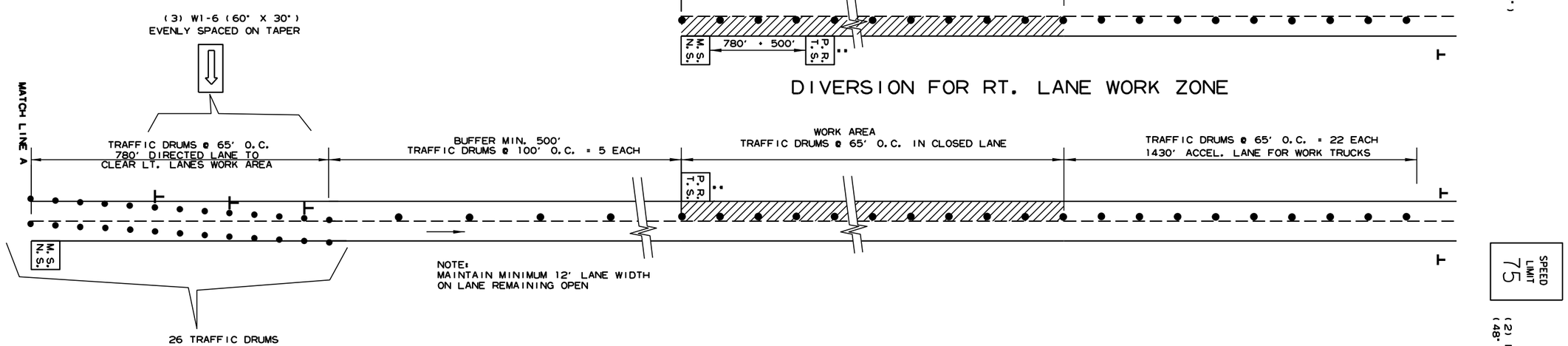

DIVERSION FOR LT. LANE WORK ZONE

I-40 LANE CLOSURE
MAINTENANCE OF TRAFFIC DETAILS

MM41715 7/24/2023
R06I613.DGN

DATE REVISED	DATE REVISED	FED.RD. DIST.NO.	STATE	JOB NO.	SHEET NO.	TOTAL SHEETS
		6	ARK.	061613	32	215
		MAINTENANCE OF TRAFFIC DETAILS				

STATE OF ARKANSAS
LICENSED PROFESSIONAL ENGINEER
No. 11425
TRINITY D. SMITH

Aug 16 2023 3:11 PM

DocuSign

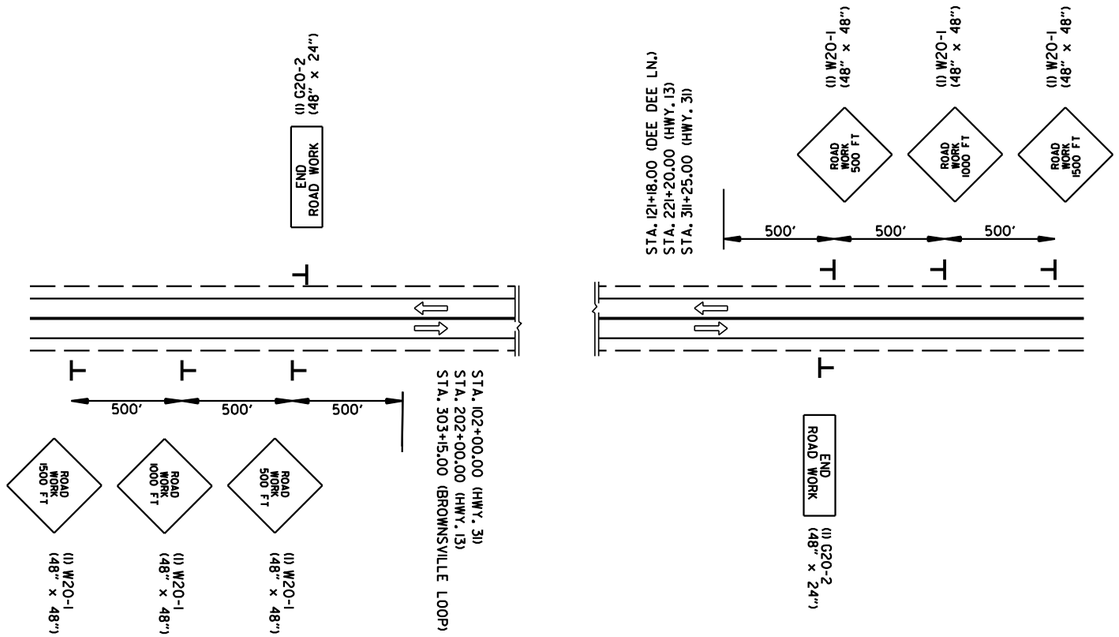

ADVANCE WARNING (ALL STAGES)

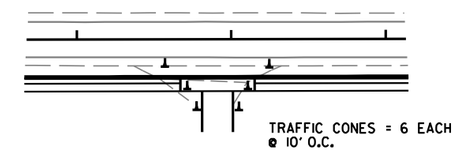

DRIVEWAY/TRAFFIC CONE DETAIL

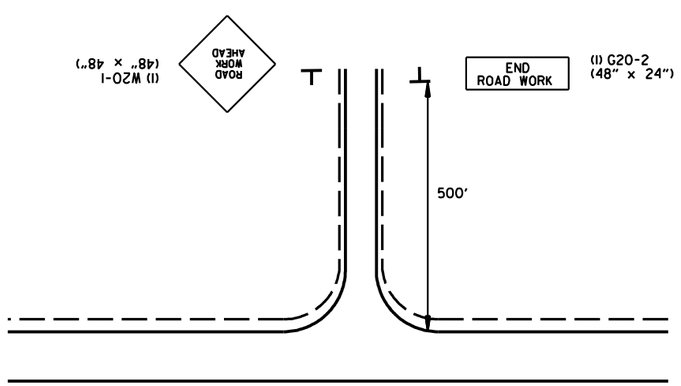

ADVANCE WARNING - SIDE ROADS
(ALL STAGES)

STA. 101+11 RT., NATHAN RD.

NOTE: STATION BASED OFF PROPOSED CENTERLINE.

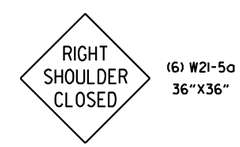

(6) W21-5a
36"X36"

ALL STAGES
TO BE USED IF AND
WHERE DIRECTED BY
THE ENGINEER

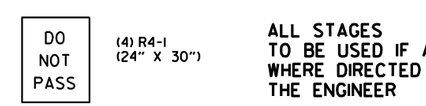

(4) R4-1
(24" X 30")

ALL STAGES
TO BE USED IF AND
WHERE DIRECTED BY
THE ENGINEER

(6) W8-1
(30" X 30")

ALL STAGES
TO BE USED IF AND
WHERE DIRECTED BY
THE ENGINEER

ADVANCE WARNING
MAINTENANCE OF TRAFFIC DETAILS

MM41715 7/24/2023
R061613.DGN

DATE REVISED	DATE REVISED	FED.RD. DIST.NO.	STATE	JOB NO.	SHEET NO.	TOTAL SHEETS
		6	ARK.	061613	33	215
		MAINTENANCE OF TRAFFIC DETAILS				

STATE OF ARKANSAS
LICENSED PROFESSIONAL ENGINEER
No. 11425
TRINITY D. SMITH

Aug 16 2023 3:11 PM

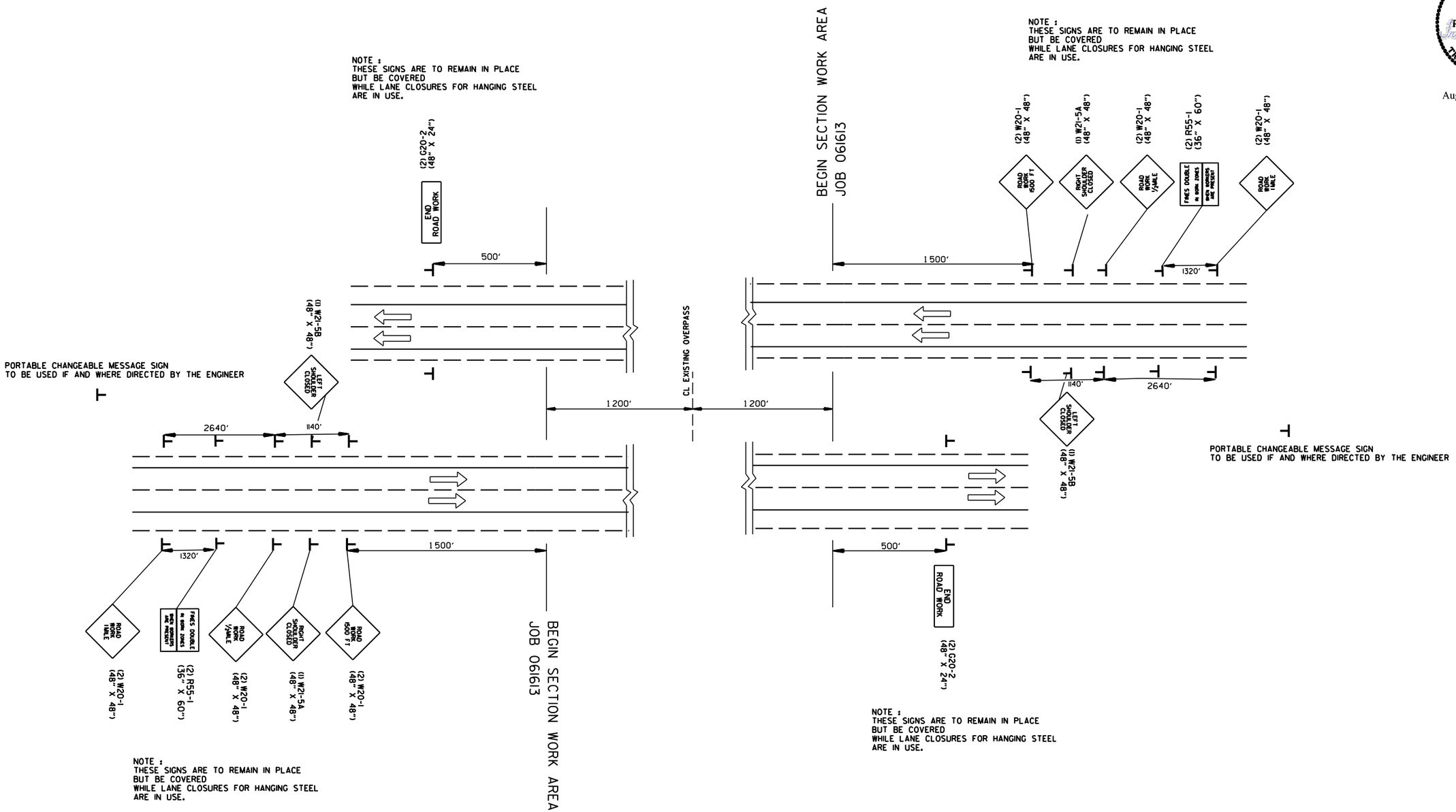

ADVANCE SIGNS AT BEGINNING AND END OF SITES ON I-40
ALL STAGES
TWO SETS NEEDED

ADVANCE WARNING
MAINTENANCE OF TRAFFIC DETAILS

MM41715 7/24/2023
R06I613.DGN

DATE REVISED	DATE REVISED	FED.RD. DIST.NO.	STATE	JOB NO.	SHEET NO.	TOTAL SHEETS
		6	ARK.	061613	34	215
		MAINTENANCE OF TRAFFIC DETAILS				

STATE OF ARKANSAS
LICENSED PROFESSIONAL ENGINEER
No. 11425
TRINITY D. SMITH

Aug 16 2023 3:12 PM

DocuSign

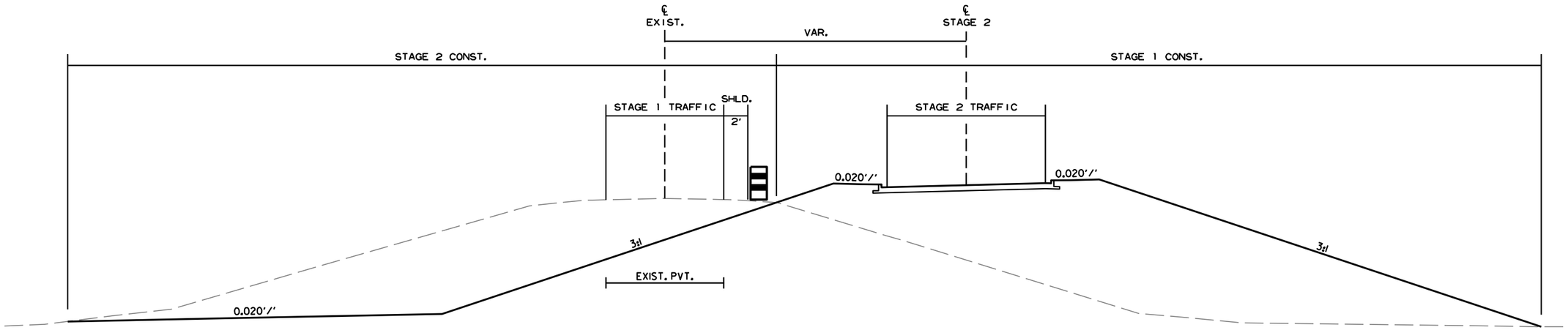

DETAIL FOR STAGE CONSTRUCTION (HWY. 31 & HWY. 13)
STA. 102+00.00 - STA. 121+18.00
STA. 202+00.00 - STA. 221+20.00

= TRAFFIC DRUM

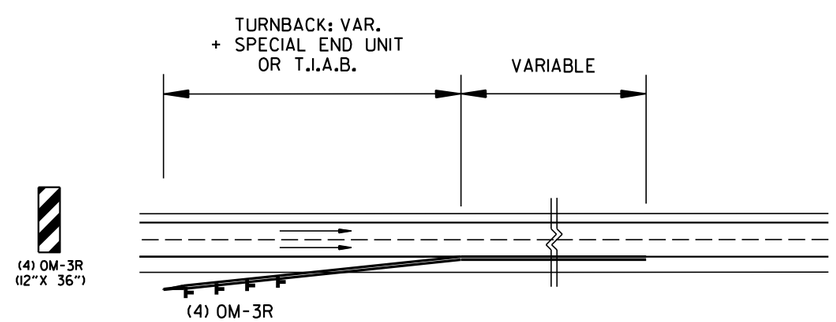

REFER ALSO TO STANDARD DRAWING TC-5
FOR DETAILS OF PLACEMENT OF PCCB TURNBACKS.

NOTE: OM-3R SIGNS SHALL BE
EQUALLY SPACED ALONG P.C.C.B.
TURNBACK.

DETAIL OF OBJECT MARKERS
AT PRECAST CONCRETE BARRIER TURNBACKS

MM41715 7/24/2023
R061613.DGN

ALL STAGES
MAINTENANCE OF TRAFFIC DETAILS

DATE REVISED	DATE REVISED	FED.RD. DIST.NO.	STATE	JOB NO.	SHEET NO.	TOTAL SHEETS
		6	ARK.	061613	35	215
		MAINTENANCE OF TRAFFIC DETAILS				

STATE OF ARKANSAS
LICENSED PROFESSIONAL ENGINEER
No. 11425
TRINITY D. SMITH

Aug 16 2023 3:12 PM

DocuSign

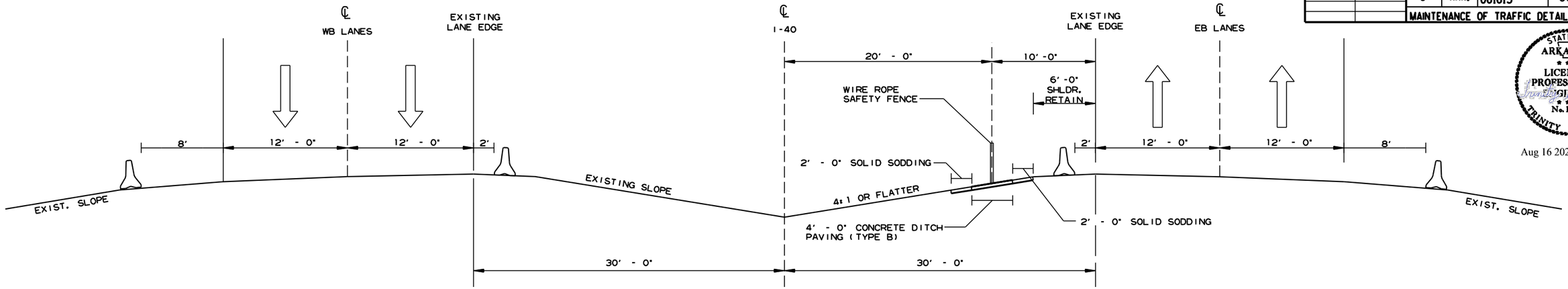

LOCATION OF TEMPORARY PRECAST CONCRETE BARRIER
FOR MAINTENANCE OF TRAFFIC ON I-40

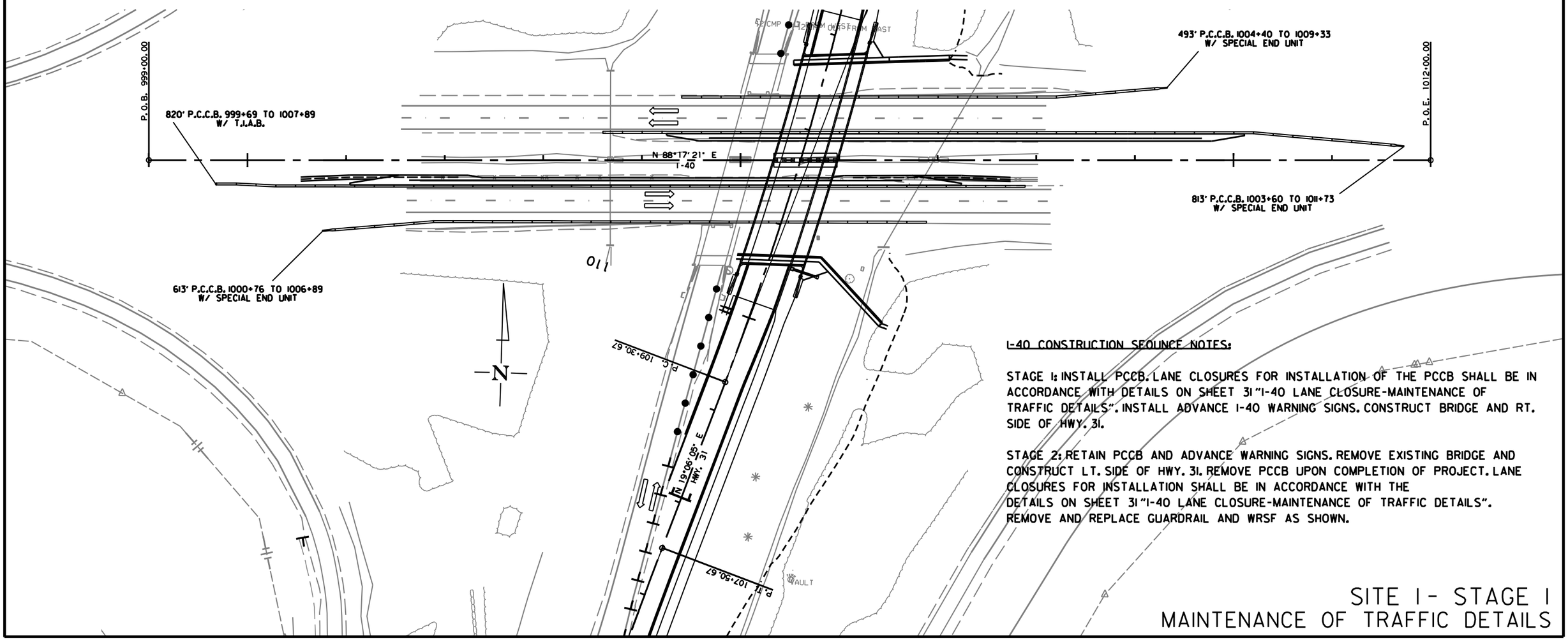

I-40 CONSTRUCTION SEQUNCE NOTES:

STAGE 1: INSTALL PCCB. LANE CLOSURES FOR INSTALLATION OF THE PCCB SHALL BE IN ACCORDANCE WITH DETAILS ON SHEET 31 "I-40 LANE CLOSURE-MAINTENANCE OF TRAFFIC DETAILS". INSTALL ADVANCE I-40 WARNING SIGNS. CONSTRUCT BRIDGE AND RT. SIDE OF HWY. 31.

STAGE 2: RETAIN PCCB AND ADVANCE WARNING SIGNS. REMOVE EXISTING BRIDGE AND CONSTRUCT LT. SIDE OF HWY. 31. REMOVE PCCB UPON COMPLETION OF PROJECT. LANE CLOSURES FOR INSTALLATION SHALL BE IN ACCORDANCE WITH THE DETAILS ON SHEET 31 "I-40 LANE CLOSURE-MAINTENANCE OF TRAFFIC DETAILS". REMOVE AND REPLACE GUARDRAIL AND WRSF AS SHOWN.

SITE 1 - STAGE 1
MAINTENANCE OF TRAFFIC DETAILS

MM41715 7/24/2023
R061613.DGN

DATE REVISED	DATE REVISED	FED.RD. DIST.NO.	STATE	JOB NO.	SHEET NO.	TOTAL SHEETS
		6	ARK.	061613	36	215
		MAINTENANCE OF TRAFFIC DETAILS				

STATE OF ARKANSAS
LICENSED PROFESSIONAL ENGINEER
No. 11425
TRINITY D. SMITH

Aug 16 2023 3:13 PM

DocuSign

HWY. 31 CONSTRUCTION SEQUENCE NOTES

STAGE 1: MAINTAIN TRAFFIC ON EXISTING LANES. INSTALL ADVANCE WARNING SIGNS AND CHANNELIZING DEVICES. CONSTRUCT BRIDGE AND RT SIDE OF HWY. 31. CONSTRUCT NORTHWEST AND SOUTHEAST QUADRANTS OF NORTHERN INTERSECTION AS SHOWN IN THE STAGE 1 MAINTENANCE OF TRAFFIC DETAILS. APPLY LEVELING TO EXISTING LANES IF AND WHERE DIRECTED BY THE ENGINEER.

STAGE 2: RETAIN ADVANCE WARNING SIGNS. INSTALL CONSTRUCTION PAVEMENT MARKINGS AND CHANNELIZING DEVICES. SHIFT TRAFFIC TO NEW HWY. 31 ROADWAY. REMOVE EXISTING BRIDGE AND CONSTRUCT LT. SIDE OF HWY. 31. CONSTRUCT NORTHEAST AND SOUTHWEST QUADRANTS OF NORTHERN INTERSECTION AS SHOWN IN THE STAGE 2 MAINTENANCE OF TRAFFIC DETAILS. CONSTRUCT SOUTHWEST ISLAND OF NORTHERN INTERSECTION AND I-40 EB EXIT ISLAND AFTER TURNOUTS HAVE BEEN WIDENED. COLD MILL TRANSITIONS AND PLACE FINAL 2" LIFT OF ACHM SURFACE COURSE. INSTALL PERMANENT PAVEMENT MARKINGS AS SHOWN IN THE PERMANENT PAVEMENT MARKINGS DETAILS.

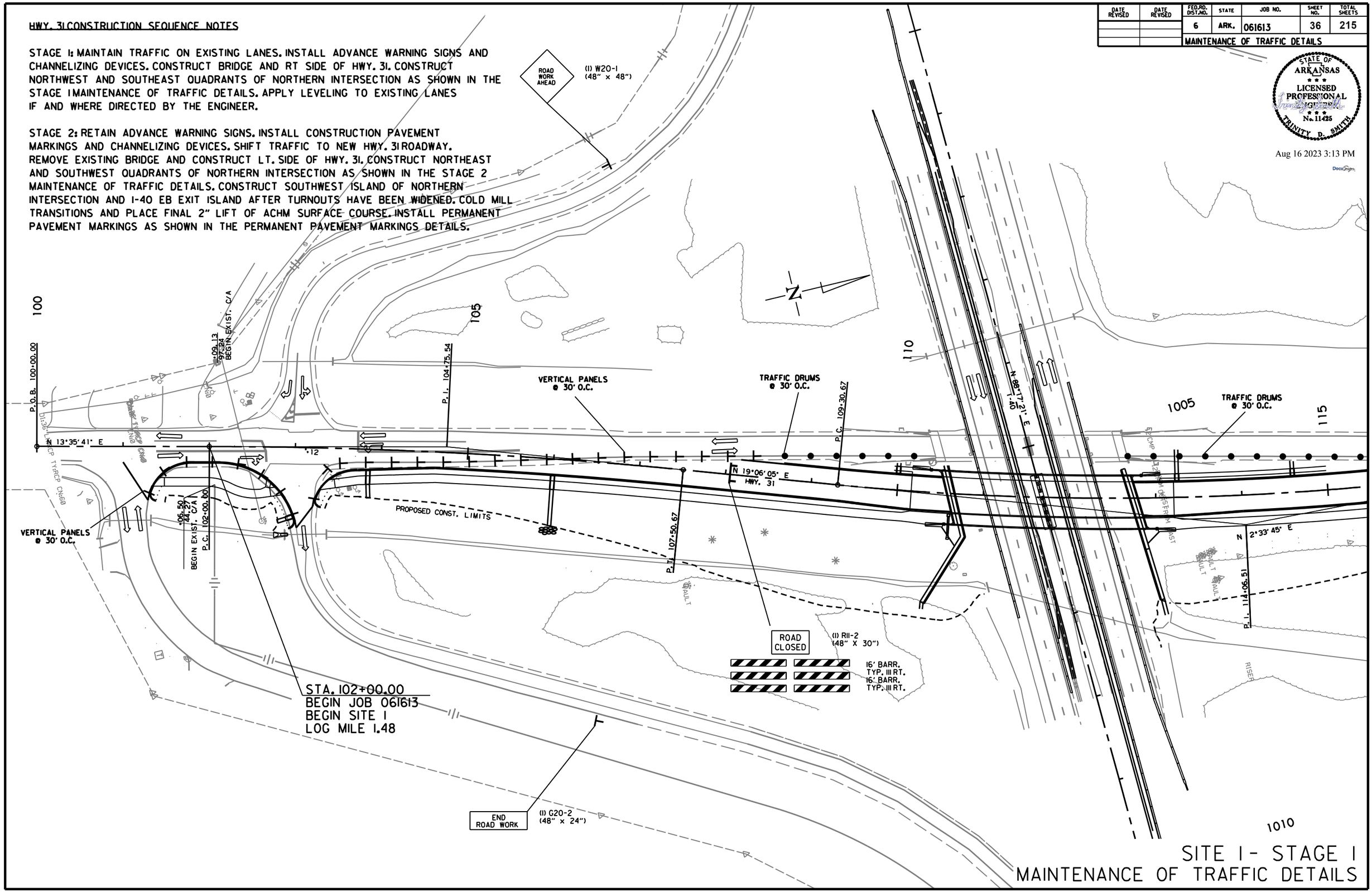

SITE 1 - STAGE 1
MAINTENANCE OF TRAFFIC DETAILS

MM41715 7/24/2023
R061613.DGN

DATE REVISED	DATE REVISED	FED.RD. DIST.NO.	STATE	JOB NO.	SHEET NO.	TOTAL SHEETS
		6	ARK.	061613	37	215
		MAINTENANCE OF TRAFFIC DETAILS				

STATE OF ARKANSAS
LICENSED PROFESSIONAL ENGINEER
No. 11425
TRINITY D. SMITH

Aug 16 2023 3:14 PM

DocuSign

HWY. 31 CONSTRUCTION SEQUENCE NOTES

STAGE 1: MAINTAIN TRAFFIC ON EXISTING LANES. INSTALL ADVANCE WARNING SIGNS AND CHANNELIZING DEVICES. CONSTRUCT BRIDGE AND RT SIDE OF HWY. 31. CONSTRUCT NORTHWEST AND SOUTHEAST QUADRANTS OF NORTHERN INTERSECTION AS SHOWN IN THE STAGE 1 MAINTENANCE OF TRAFFIC DETAILS. APPLY LEVELING TO EXISTING LANES IF AND WHERE DIRECTED BY THE ENGINEER.

STAGE 2: RETAIN ADVANCE WARNING SIGNS. INSTALL CONSTRUCTION PAVEMENT MARKINGS AND CHANNELIZING DEVICES. SHIFT TRAFFIC TO NEW HWY. 31 ROADWAY. REMOVE EXISTING BRIDGE AND CONSTRUCT LT. SIDE OF HWY. 31. CONSTRUCT NORTHEAST AND SOUTHWEST QUADRANTS OF NORTHERN INTERSECTION AS SHOWN IN THE STAGE 2 MAINTENANCE OF TRAFFIC DETAILS. CONSTRUCT SOUTHWEST ISLAND OF NORTHERN INTERSECTION AND I-40 EB EXIT ISLAND AFTER TURNOUTS HAVE BEEN WIDENED. COLD MILL TRANSITIONS AND PLACE FINAL 2" LIFT OF ACHM SURFACE COURSE. INSTALL PERMANENT PAVEMENT MARKINGS AS SHOWN IN THE PERMANENT PAVEMENT MARKINGS DETAILS.

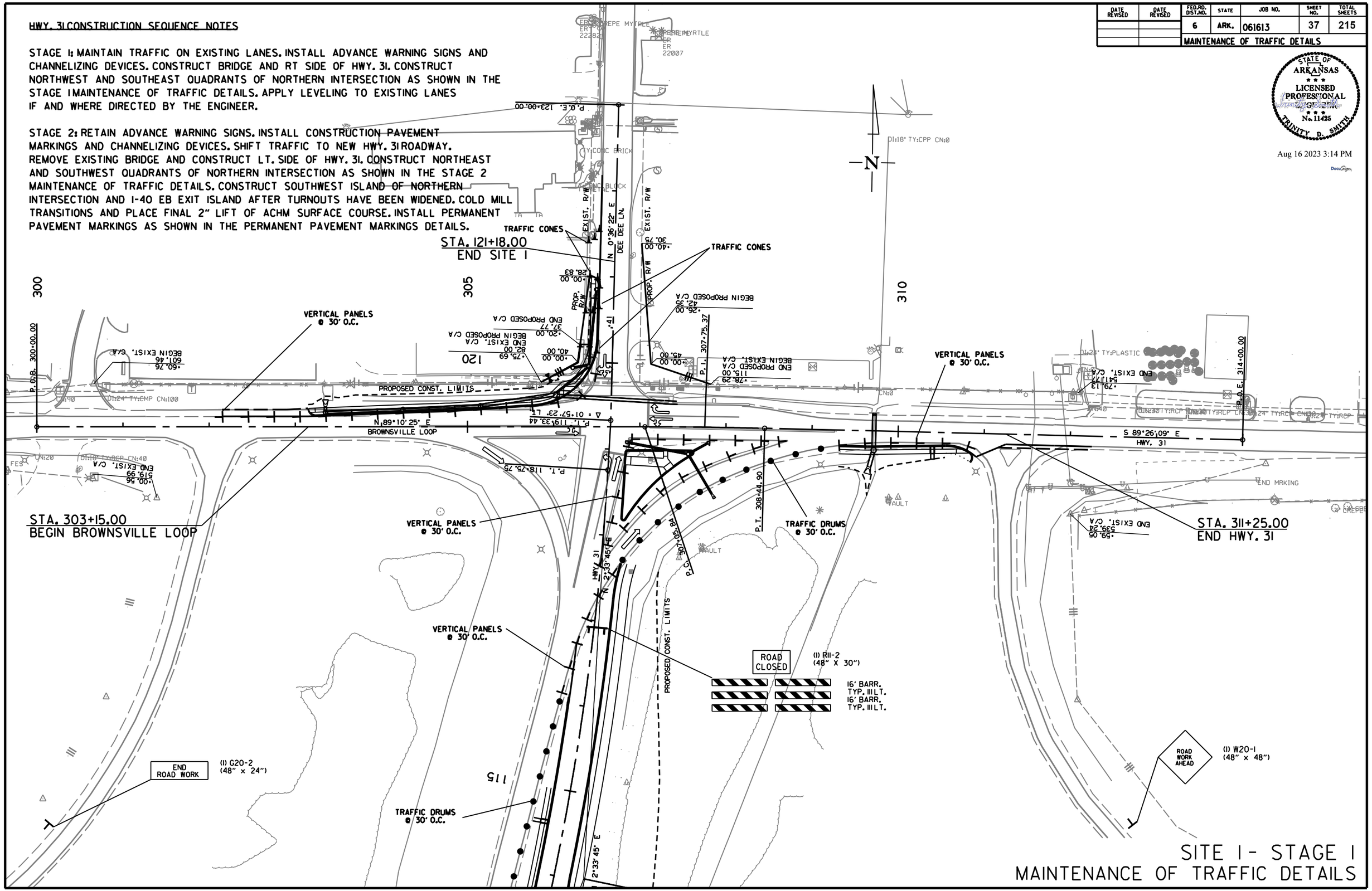

SITE 1 - STAGE 1
MAINTENANCE OF TRAFFIC DETAILS

MM41715 7/24/2023
R061613.DGN

DATE REVISED	DATE REVISED	FED.RD. DIST.NO.	STATE	JOB NO.	SHEET NO.	TOTAL SHEETS
		6	ARK.	061613	38	215
		MAINTENANCE OF TRAFFIC DETAILS				

STATE OF ARKANSAS
LICENSED PROFESSIONAL ENGINEER
No. 11425
TRINITY D. SMITH

Aug 16 2023 3:14 PM

HWY. 31 CONSTRUCTION SEQUENCE NOTES

STAGE 1: MAINTAIN TRAFFIC ON EXISTING LANES. INSTALL ADVANCE WARNING SIGNS AND CHANNELIZING DEVICES. CONSTRUCT BRIDGE AND RT SIDE OF HWY. 31. CONSTRUCT NORTHWEST AND SOUTHEAST QUADRANTS OF NORTHERN INTERSECTION AS SHOWN IN THE STAGE 1 MAINTENANCE OF TRAFFIC DETAILS. APPLY LEVELING TO EXISTING LANES IF AND WHERE DIRECTED BY THE ENGINEER.

STAGE 2: RETAIN ADVANCE WARNING SIGNS. INSTALL CONSTRUCTION PAVEMENT MARKINGS AND CHANNELIZING DEVICES. SHIFT TRAFFIC TO NEW HWY. 31 ROADWAY. REMOVE EXISTING BRIDGE AND CONSTRUCT LT. SIDE OF HWY. 31. CONSTRUCT NORTHEAST AND SOUTHWEST QUADRANTS OF NORTHERN INTERSECTION AS SHOWN IN THE STAGE 2 MAINTENANCE OF TRAFFIC DETAILS. CONSTRUCT SOUTHWEST ISLAND OF NORTHERN INTERSECTION AND I-40 EB EXIT ISLAND AFTER TURNOUTS HAVE BEEN WIDENED. COLD MILL TRANSITIONS AND PLACE FINAL 2" LIFT OF ACHM SURFACE COURSE. INSTALL PERMANENT PAVEMENT MARKINGS AS SHOWN IN THE PERMANENT PAVEMENT MARKINGS DETAILS.

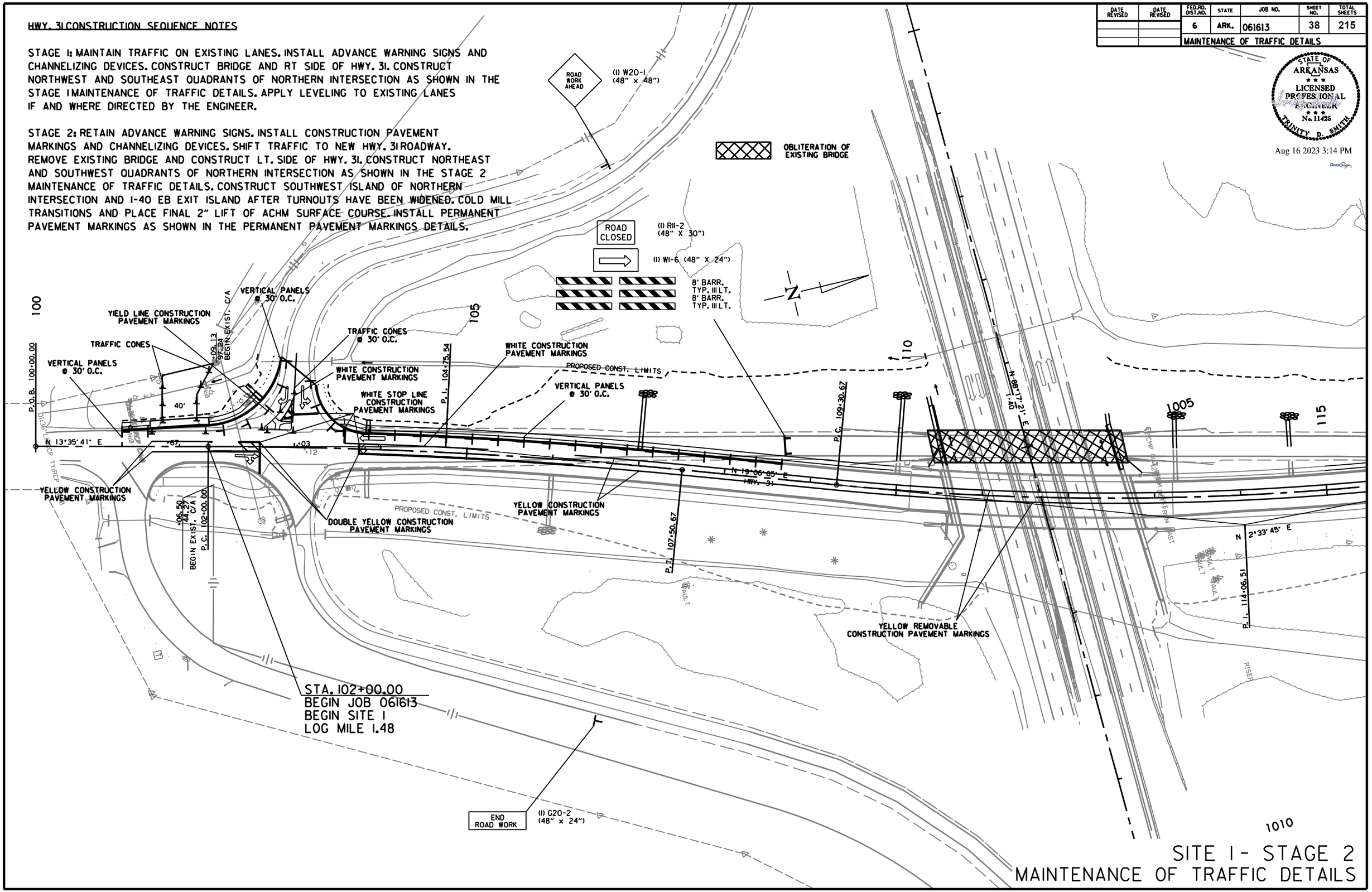

SITE 1 - STAGE 2
MAINTENANCE OF TRAFFIC DETAILS

MM41715 7/24/2023
R061613.DGN

DATE REVISED	DATE REVISED	FED.RD. DIST.NO.	STATE	JOB NO.	SHEET NO.	TOTAL SHEETS
		6	ARK.	061613	39	215
		MAINTENANCE OF TRAFFIC DETAILS				

STATE OF ARKANSAS
LICENSED PROFESSIONAL ENGINEER
No. 11425
TRINITY D. SMITH

Aug 16 2023 3:14 PM

DocuSign

HWY. 31 CONSTRUCTION SEQUENCE NOTES

STAGE 1: MAINTAIN TRAFFIC ON EXISTING LANES. INSTALL ADVANCE WARNING SIGNS AND CHANNELIZING DEVICES. CONSTRUCT BRIDGE AND RT SIDE OF HWY. 31. CONSTRUCT NORTHWEST AND SOUTHEAST QUADRANTS OF NORTHERN INTERSECTION AS SHOWN IN THE STAGE 1 MAINTENANCE OF TRAFFIC DETAILS. APPLY LEVELING TO EXISTING LANES IF AND WHERE DIRECTED BY THE ENGINEER.

STAGE 2: RETAIN ADVANCE WARNING SIGNS. INSTALL CONSTRUCTION PAVEMENT MARKINGS AND CHANNELIZING DEVICES. SHIFT TRAFFIC TO NEW HWY. 31 ROADWAY. REMOVE EXISTING BRIDGE AND CONSTRUCT LT. SIDE OF HWY. 31. CONSTRUCT NORTHEAST AND SOUTHWEST QUADRANTS OF NORTHERN INTERSECTION AS SHOWN IN THE STAGE 2 MAINTENANCE OF TRAFFIC DETAILS. CONSTRUCT SOUTHWEST ISLAND OF NORTHERN INTERSECTION AND I-40 EB EXIT ISLAND AFTER TURNOUTS HAVE BEEN WIDENED. COLD MILL TRANSITIONS AND PLACE FINAL 2" LIFT OF ACHM SURFACE COURSE. INSTALL PERMANENT PAVEMENT MARKINGS AS SHOWN IN THE PERMANENT PAVEMENT MARKINGS DETAILS.

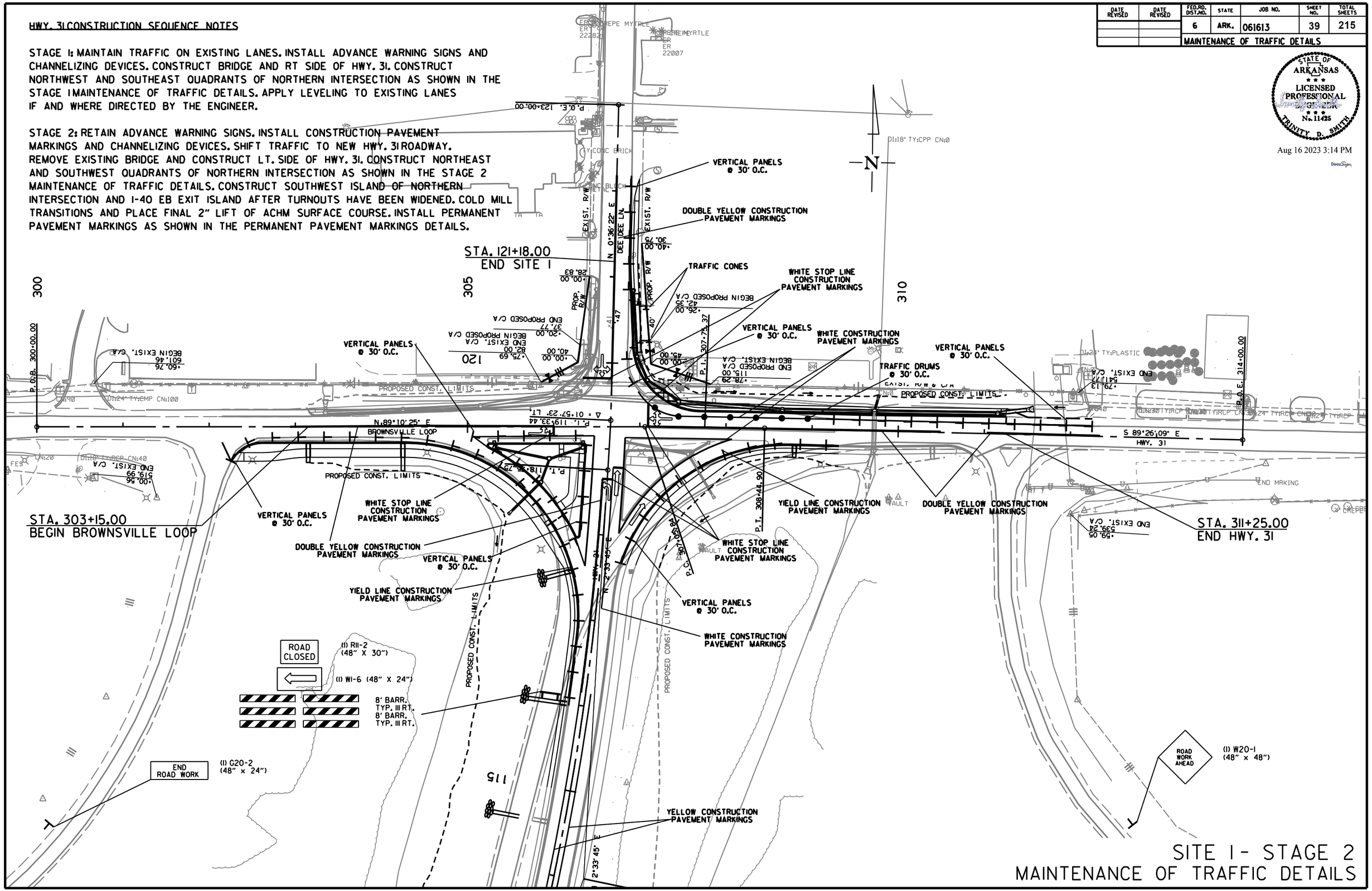

SITE 1 - STAGE 2
MAINTENANCE OF TRAFFIC DETAILS

MM41715 7/24/2023
R061613.DGN

DATE REVISED	DATE REVISED	FED.RD. DIST.NO.	STATE	JOB NO.	SHEET NO.	TOTAL SHEETS
		6	ARK.	061613	40	215
		MAINTENANCE OF TRAFFIC DETAILS				

STATE OF ARKANSAS
LICENSED PROFESSIONAL ENGINEER
No. 11425
TRINITY D. SMITH

Aug 16 2023 3:15 PM

DocuSign

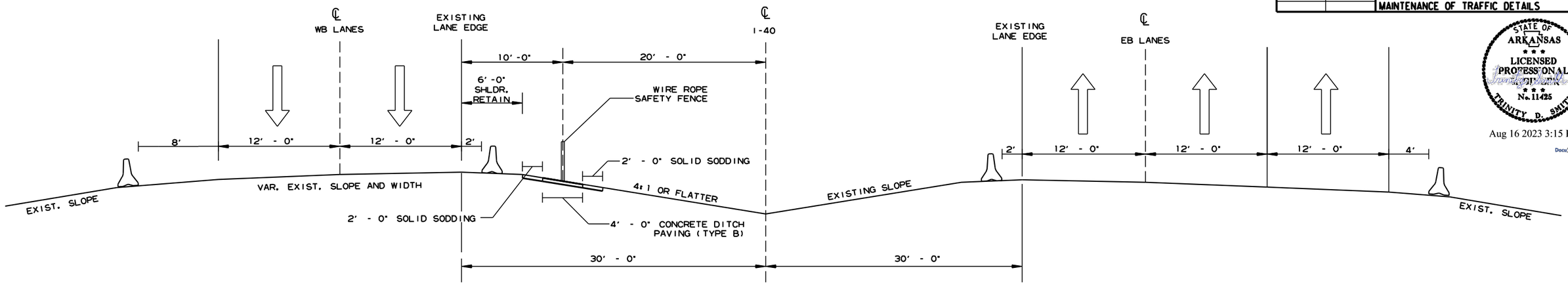

LOCATION OF TEMPORARY PRECAST CONCRETE BARRIER
FOR MAINTENANCE OF TRAFFIC ON I-40

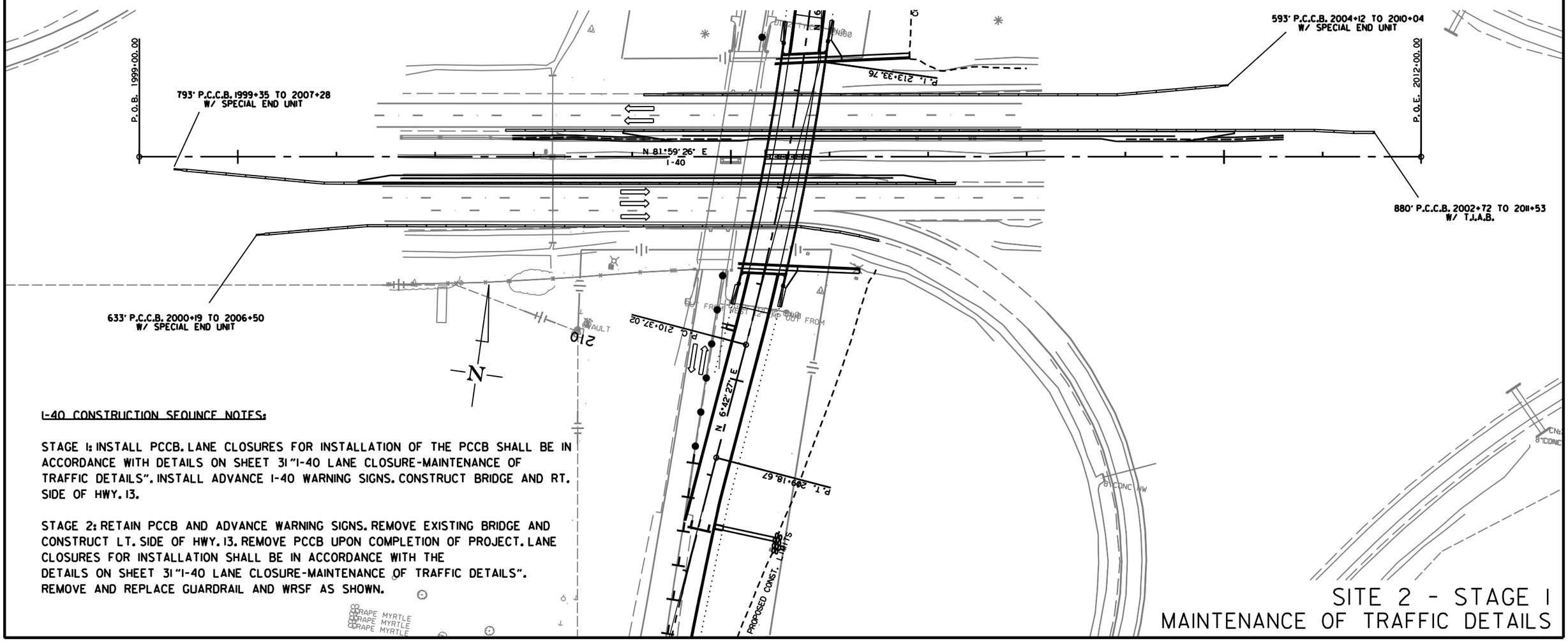

I-40 CONSTRUCTION SEQUNCE NOTES:

STAGE 1: INSTALL PCCB. LANE CLOSURES FOR INSTALLATION OF THE PCCB SHALL BE IN ACCORDANCE WITH DETAILS ON SHEET 31 "I-40 LANE CLOSURE-MAINTENANCE OF TRAFFIC DETAILS". INSTALL ADVANCE I-40 WARNING SIGNS. CONSTRUCT BRIDGE AND RT. SIDE OF HWY. 13.

STAGE 2: RETAIN PCCB AND ADVANCE WARNING SIGNS. REMOVE EXISTING BRIDGE AND CONSTRUCT LT. SIDE OF HWY. 13. REMOVE PCCB UPON COMPLETION OF PROJECT. LANE CLOSURES FOR INSTALLATION SHALL BE IN ACCORDANCE WITH THE DETAILS ON SHEET 31 "I-40 LANE CLOSURE-MAINTENANCE OF TRAFFIC DETAILS". REMOVE AND REPLACE GUARDRAIL AND WRSF AS SHOWN.

SITE 2 - STAGE 1
MAINTENANCE OF TRAFFIC DETAILS

MM41715 7/24/2023
R061613.DGN

DATE REVISED	DATE REVISED	FED.RD. DIST.NO.	STATE	JOB NO.	SHEET NO.	TOTAL SHEETS
		6	ARK.	061613	41	215
		MAINTENANCE OF TRAFFIC DETAILS				

STATE OF ARKANSAS
LICENSED PROFESSIONAL ENGINEER
No. 11425
TRINITY D. SMITH

Aug 16 2023 3:15 PM

DocuSign

HWY. 13 CONSTRUCTION SEQUENCE NOTES

STAGE 1: MAINTAIN TRAFFIC ON EXISTING LANES. INSTALL ADVANCE WARNING SIGNS AND CHANELIZING DEVICES. CONSTRUCT BRIDGE AND RT. SIDE OF HWY. 13. APPLY LEVELING COURSE TO EXISTING LANES IF AND WHERE DIRECTED BY THE ENGINEER.

STAGE 2: RETAIN ADVANCE WARNING SIGNS AND INSTALL CONSTRUCTION PAVEMEMENT MARKINGS AND CHANNELIZING DEVICES. SHIFT TRAFFIC TO NEW HWY. 13 ROADWAY. REMOVE EXISTING BRIDGE AND CONSTRUCT LT. SIDE OF HWY. 13. CONSTRUCT I-40 EB ENTRANCE/EXIT ISLANDS. COLD MILL TRANSITIONS AND PLACE FINAL 2" OF ACHM SURFACE COURSE. INSTALL PERMANENT PAVEMENT MARKINGS AS SHOWN IN THE PERMANENT PAVEMENT MARKINGS DETAILS.

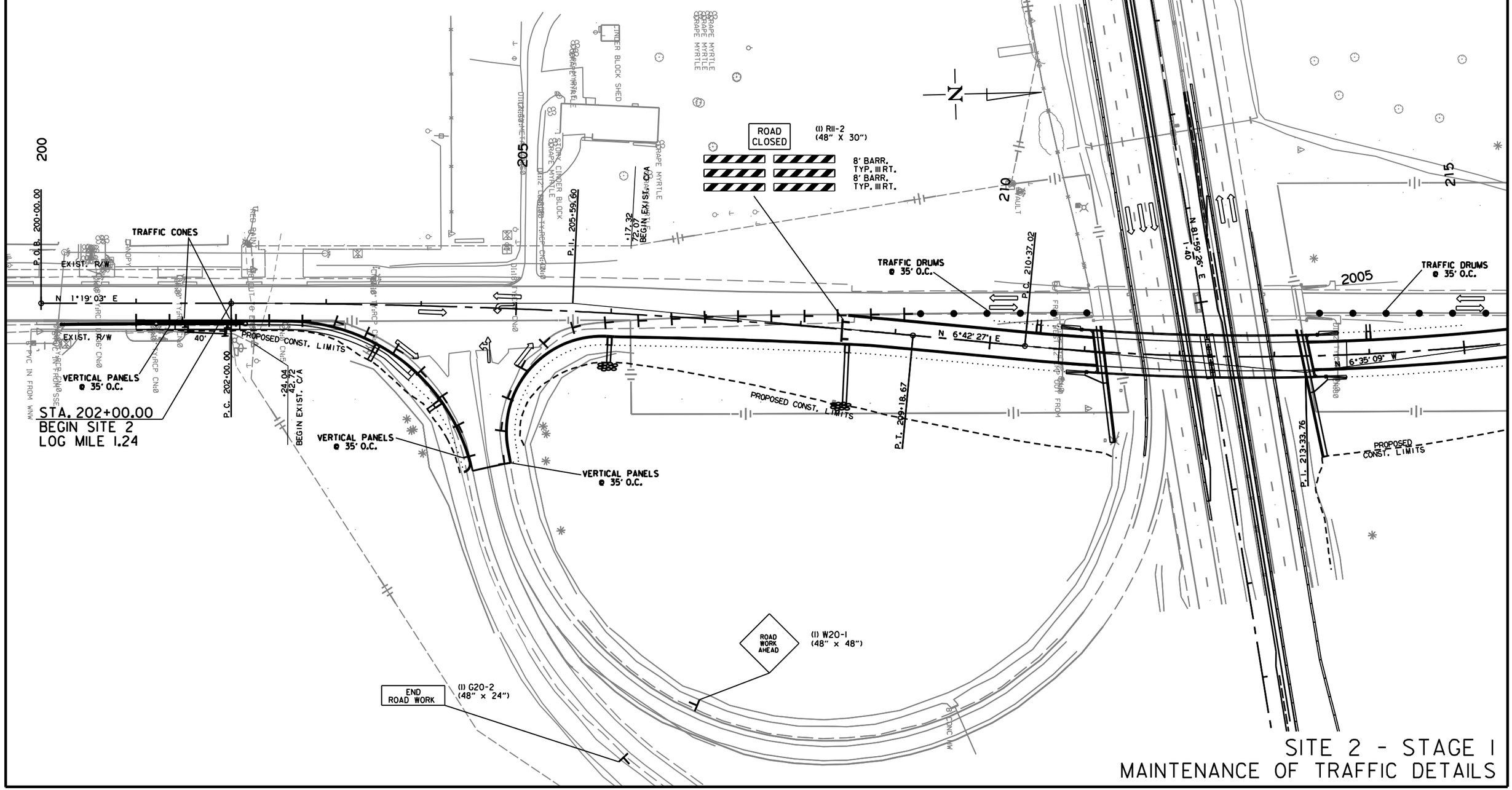

MM41715 7/24/2023
R061613.DGN

DATE REVISED	DATE REVISED	FED.RD. DIST.NO.	STATE	JOB NO.	SHEET NO.	TOTAL SHEETS
		6	ARK.	061613	42	215
		MAINTENANCE OF TRAFFIC DETAILS				

STATE OF ARKANSAS
LICENSED PROFESSIONAL ENGINEER
No. 11425
TRINITY D. SMITH

Aug 16 2023 3:15 PM

DocuSign

HWY. 13 CONSTRUCTION SEQUENCE NOTES

STAGE 1: MAINTAIN TRAFFIC ON EXISTING LANES. INSTALL ADVANCE WARNING SIGNS AND CHANELIZING DEVICES. CONSTRUCT BRIDGE AND RT. SIDE OF HWY. 13. APPLY LEVELING COURSE TO EXISTING LANES IF AND WHERE DIRECTED BY THE ENGINEER.

STAGE 2: RETAIN ADVANCE WARNING SIGNS AND INSTALL CONSTRUCTION PAVEMEMENT MARKINGS AND CHANNELIZING DEVICES. SHIFT TRAFFIC TO NEW HWY. 13 ROADWAY. REMOVE EXISTING BRIDGE AND CONSTRUCT LT. SIDE OF HWY. 13. CONSTRUCT I-40 EB ENTRANCE/EXIT ISLANDS. COLD MILL TRANSITIONS AND PLACE FINAL 2" OF ACHM SURFACE COURSE. INSTALL PERMANENT PAVEMENT MARKINGS AS SHOWN IN THE PERMANENT PAVEMENT MARKINGS DETAILS.

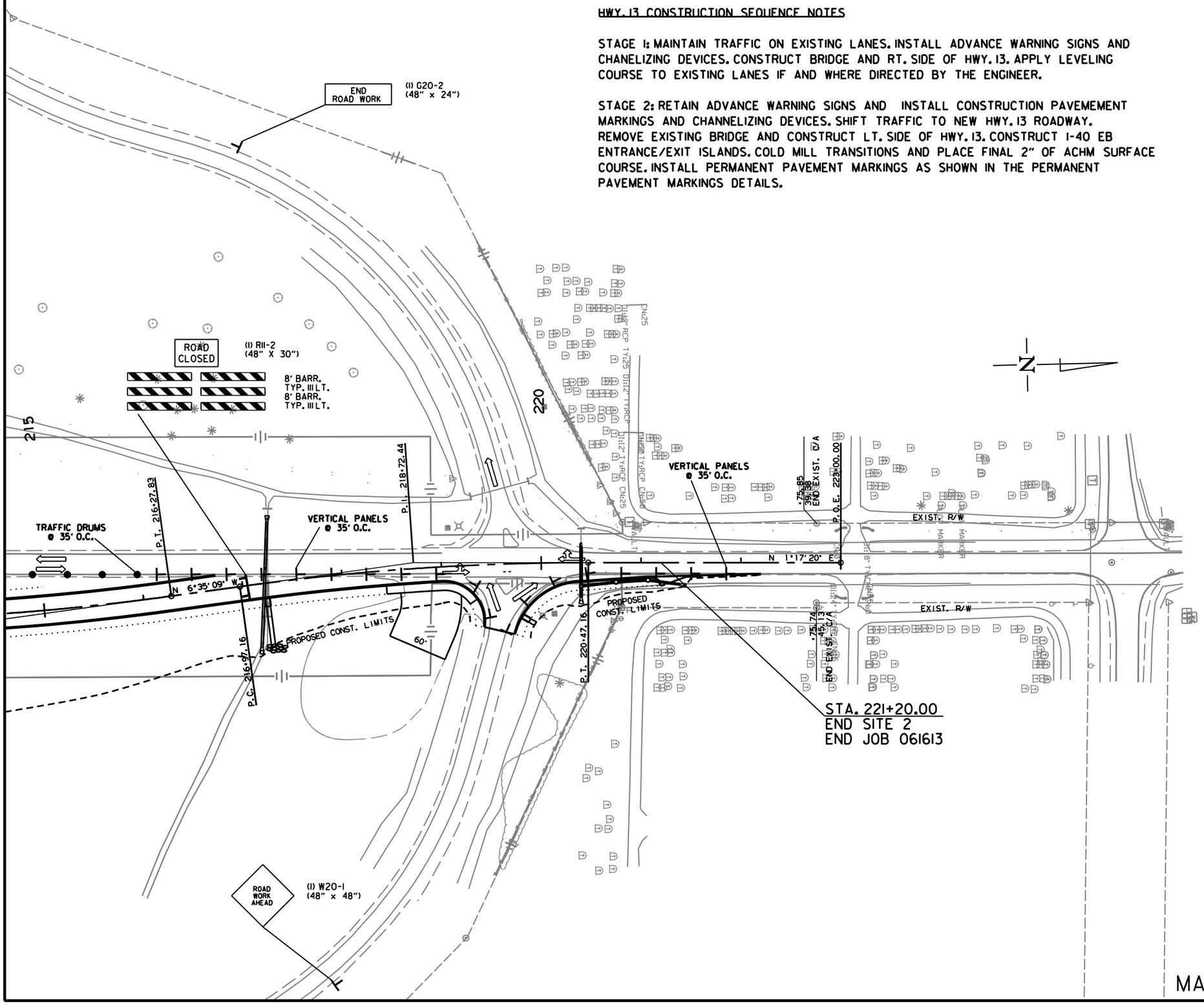

SITE 2 - STAGE 1
MAINTENANCE OF TRAFFIC DETAILS

MM41715 7/24/2023
R061613.DGN

DATE REVISED	DATE REVISED	FED.RD. DIST.NO.	STATE	JOB NO.	SHEET NO.	TOTAL SHEETS
		6	ARK.	061613	43	215
		MAINTENANCE OF TRAFFIC DETAILS				

STATE OF ARKANSAS
LICENSED PROFESSIONAL ENGINEER
No. 11425
TRINITY D. SMITH

Aug 16 2023 3:16 PM

DocuSign

HWY. 13 CONSTRUCTION SEQUENCE NOTES

STAGE 1: MAINTAIN TRAFFIC ON EXISTING LANES. INSTALL ADVANCE WARNING SIGNS AND CHANELIZING DEVICES. CONSTRUCT BRIDGE AND RT. SIDE OF HWY. 13. APPLY LEVELING COURSE TO EXISTING LANES IF AND WHERE DIRECTED BY THE ENGINEER.

STAGE 2: RETAIN ADVANCE WARNING SIGNS AND INSTALL CONSTRUCTION PAVEMEMENT MARKINGS AND CHANNELIZING DEVICES. SHIFT TRAFFIC TO NEW HWY. 13 ROADWAY. REMOVE EXISTING BRIDGE AND CONSTRUCT LT. SIDE OF HWY. 13. CONSTRUCT I-40 EB ENTRANCE/EXIT ISLANDS. COLD MILL TRANSITIONS AND PLACE FINAL 2" OF ACHM SURFACE COURSE. INSTALL PERMANENT PAVEMENT MARKINGS AS SHOWN IN THE PERMANENT PAVEMENT MARKINGS DETAILS.

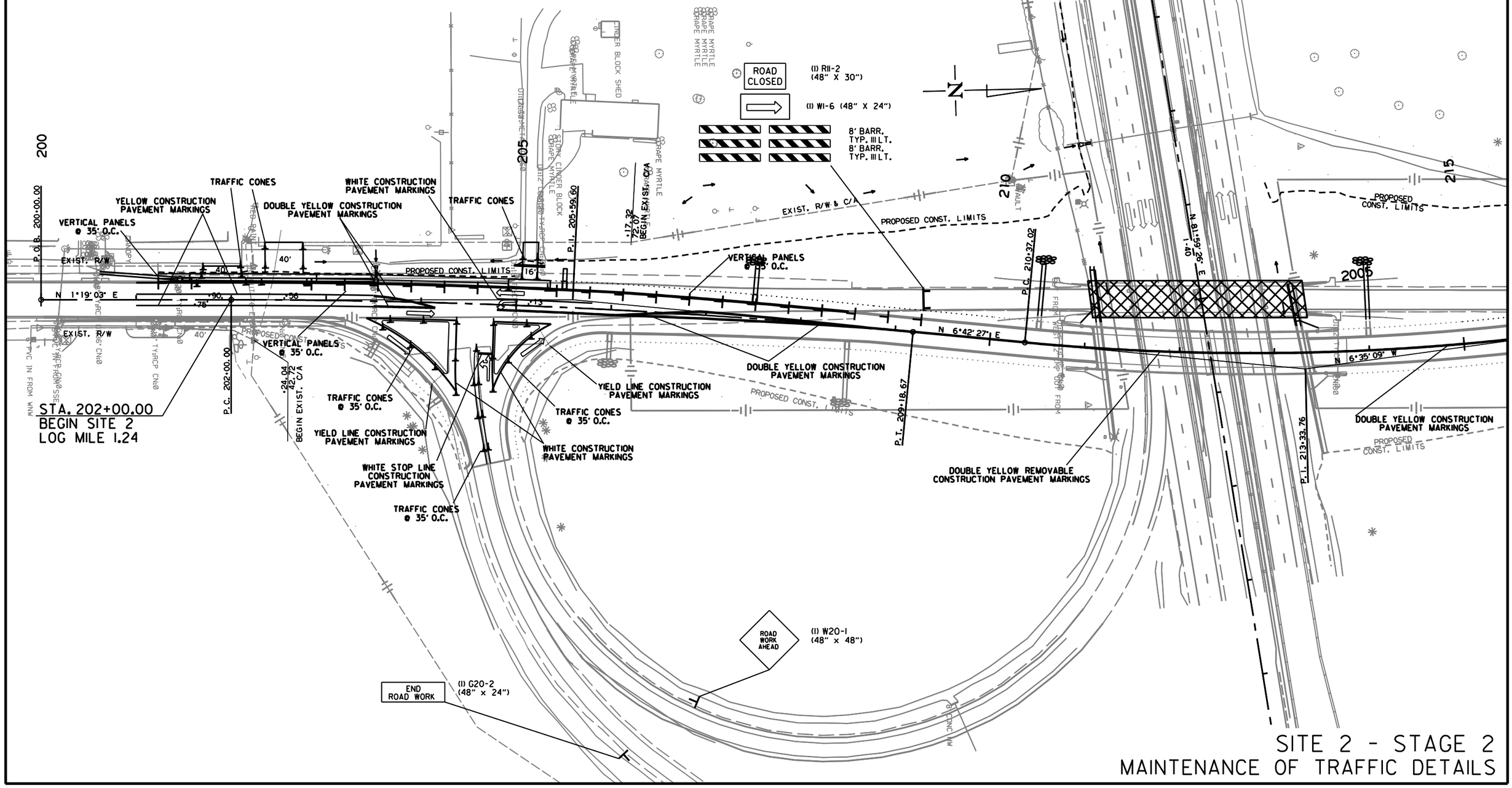

SITE 2 - STAGE 2
MAINTENANCE OF TRAFFIC DETAILS

MM41715 7/24/2023
R061613.DGN

DATE REVISED	DATE REVISED	FED.RD. DIST.NO.	STATE	JOB NO.	SHEET NO.	TOTAL SHEETS
		6	ARK.	061613	44	215
		MAINTENANCE OF TRAFFIC DETAILS				

STATE OF ARKANSAS
LICENSED PROFESSIONAL
No. 11425
TRINITY D. SMITH

Aug 16 2023 3:16 PM

DocuSign

HWY. 13 CONSTRUCTION SEQUENCE NOTES

STAGE 1: MAINTAIN TRAFFIC ON EXISTING LANES. INSTALL ADVANCE WARNING SIGNS AND CHANELIZING DEVICES. CONSTRUCT BRIDGE AND RT. SIDE OF HWY. 13. APPLY LEVELING COURSE TO EXISTING LANES IF AND WHERE DIRECTED BY THE ENGINEER.

STAGE 2: RETAIN ADVANCE WARNING SIGNS AND INSTALL CONSTRUCTION PAVEMEMENT MARKINGS AND CHANNELIZING DEVICES. SHIFT TRAFFIC TO NEW HWY. 13 ROADWAY. REMOVE EXISTING BRIDGE AND CONSTRUCT LT. SIDE OF HWY. 13. CONSTRUCT I-40 EB ENTRANCE/EXIT ISLANDS. COLD MILL TRANSITIONS AND PLACE FINAL 2" OF ACHM SURFACE COURSE. INSTALL PERMANENT PAVEMENT MARKINGS AS SHOWN IN THE PERMANENT PAVEMENT MARKINGS DETAILS.

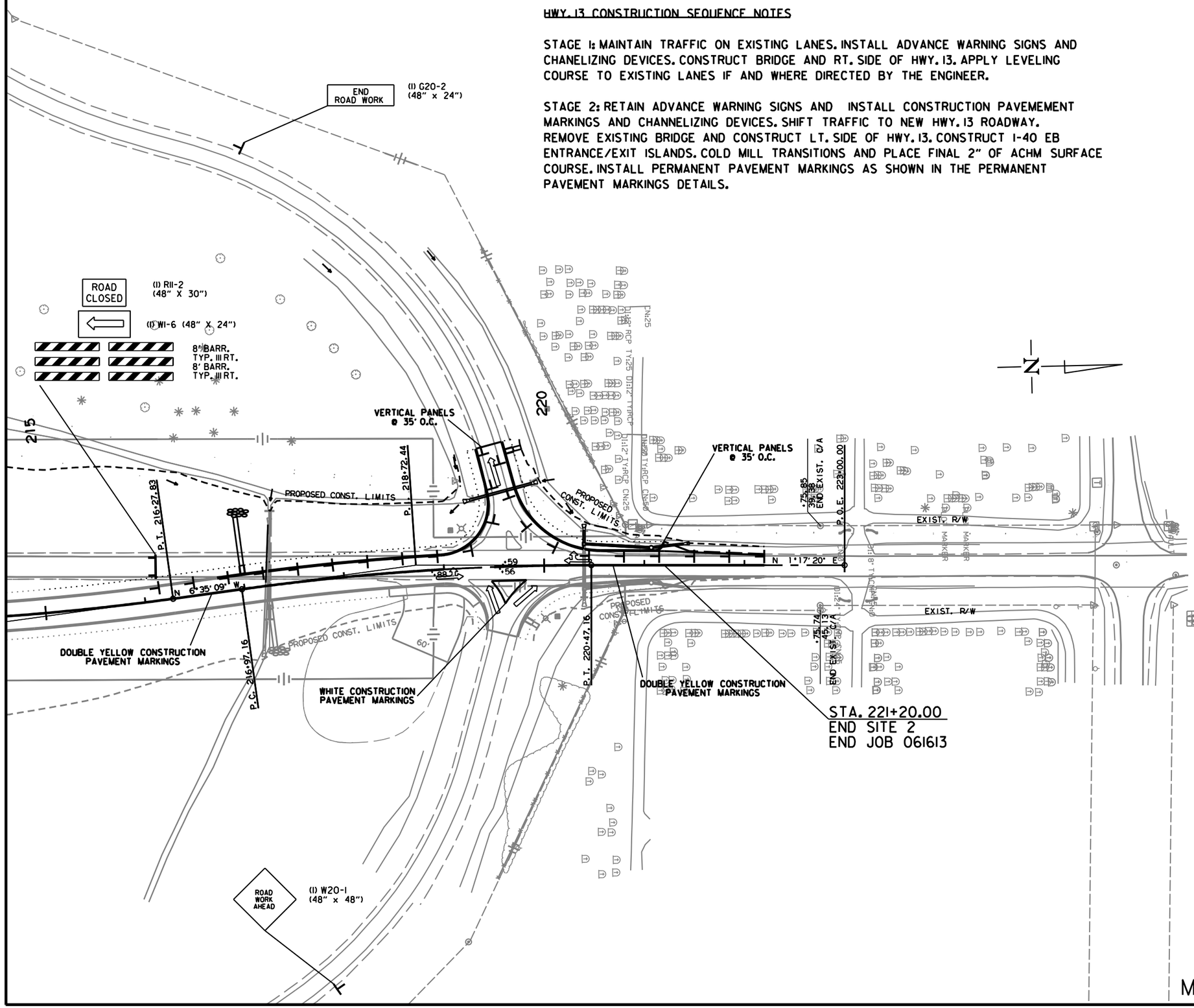

SITE 2 - STAGE 2
MAINTENANCE OF TRAFFIC DETAILS

MM41715 7/24/2023
R061613.DGN

DATE REVISED	DATE REVISED	FED.RD. DIST.NO.	STATE	JOB NO.	SHEET NO.	TOTAL SHEETS
		6	ARK.	061613	45	215

PERMANENT PAVEMENT MARKING DETAILS

STATE OF ARKANSAS
LICENSED PROFESSIONAL ENGINEER
No. 11425
TRINITY D. SMITH

Aug 16 2023 3:16 PM

DocuSign

LEGEND

- = 6" WHITE THERMOPLASTIC PAVEMENT MARKING
- = 12" WHITE (STOP LINE) THERMOPLASTIC PAVEMENT MARKING
- = 12" WHITE (CROSSWALK) THERMOPLASTIC PAVEMENT MARKING
- = 6" SKIP YELLOW WITH 6" YELLOW THERMOPLASTIC PAVEMENT MARKING & RAISED PAVEMENT MARKERS (TYPE II)(YELLOW/YELLOW) SPACED 80' O.C.
- = THERMOPLASTIC PAVEMENT MARKING (YIELD LINE)
- = THERMOPLASTIC PAVEMENT MARKING (WORD)
- = THERMOPLASTIC PAVEMENT MARKING (ARROW)

NOTE: USE THE CORRESPONDING PAVEMENT MARKINGS LISTED ABOVE UNLESS OTHERWISE SPECIFIED IN THE PERMANENT PAVEMENT MARKING DETAILS.

PERMANENT PAVEMENT MARKINGS (SITE 1)

RAISED PAVEMENT MARKERS TYPE II (YEL/YEL) (80' O.C.) = 51 EACH
THERMOPLASTIC PAVEMENT MARKING WHITE (6") = 1850 LIN. FT.
THERMOPLASTIC PAVEMENT MARKING WHITE (8") = 944 LIN. FT.
THERMOPLASTIC PAVEMENT MARKING WHITE (12") = 1228 LIN. FT.
THERMOPLASTIC PAVEMENT MARKING YELLOW (6") = 6628 LIN. FT.
THERMOPLASTIC PAVEMENT MARKING YELLOW (8") = 90 LIN. FT.
THERMOPLASTIC PAVEMENT MARKING (YIELD LINE) = 53 LIN. FT.
THERMOPLASTIC PAVEMENT MARKING (WORDS) = 5 EACH
THERMOPLASTIC PAVEMENT MARKING (ARROWS) = 10 EACH
REFLECTORIZED PAINT PAVEMENT MARKING WHITE (10") = 694 LIN. FT.

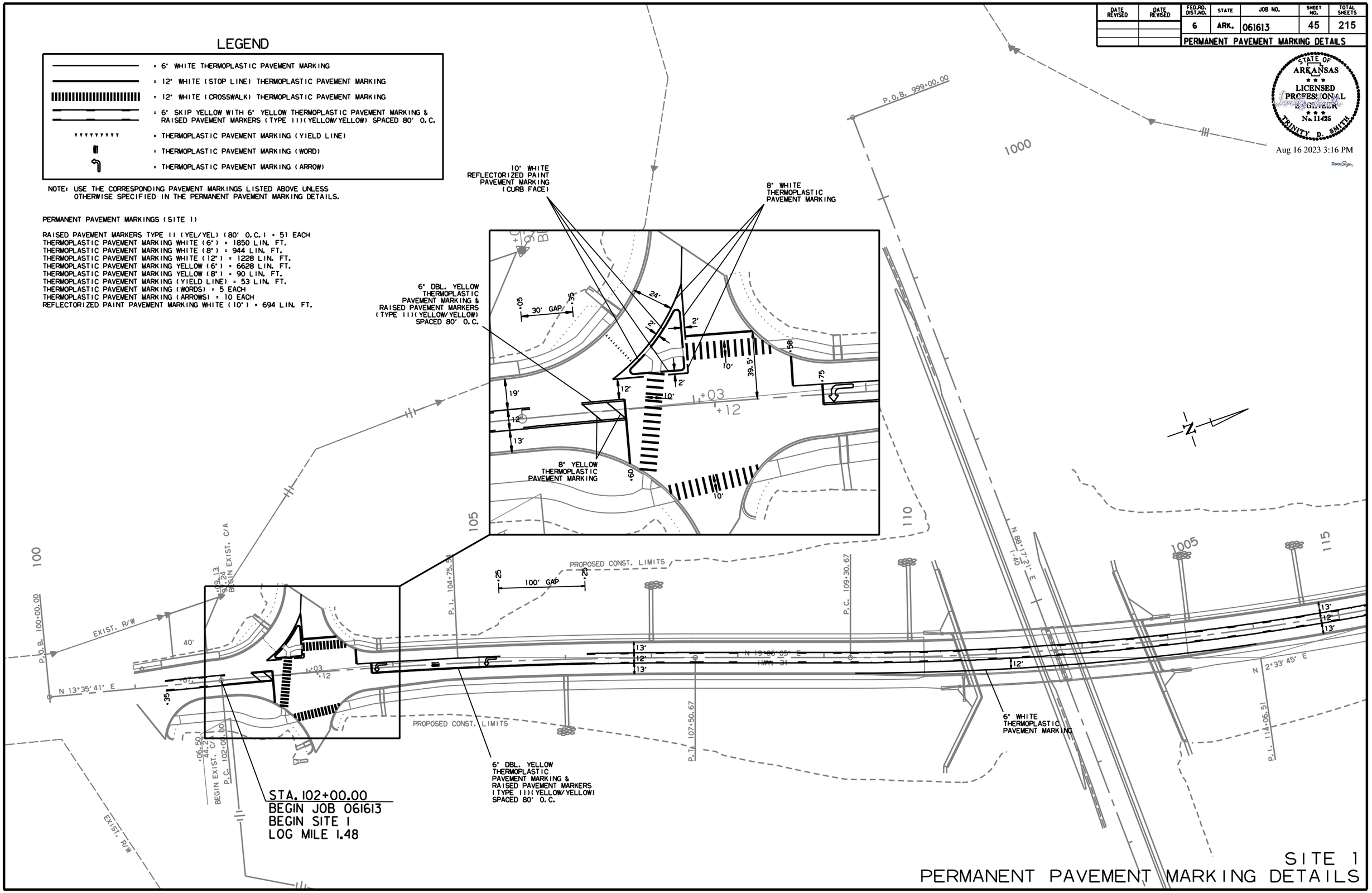

SITE 1
PERMANENT PAVEMENT MARKING DETAILS

MM41715 7/24/2023
R061613.DGN

DATE REVISED	DATE REVISED	FED.RD. DIST.NO.	STATE	JOB NO.	SHEET NO.	TOTAL SHEETS
		6	ARK.	061613	46	215
		PERMANENT PAVEMENT MARKING DETAILS				

STATE OF ARKANSAS
LICENSED PROFESSIONAL ENGINEER
No. 11425
TRINITY D. SMITH

Aug 16 2023 3:19 PM

DocuSign

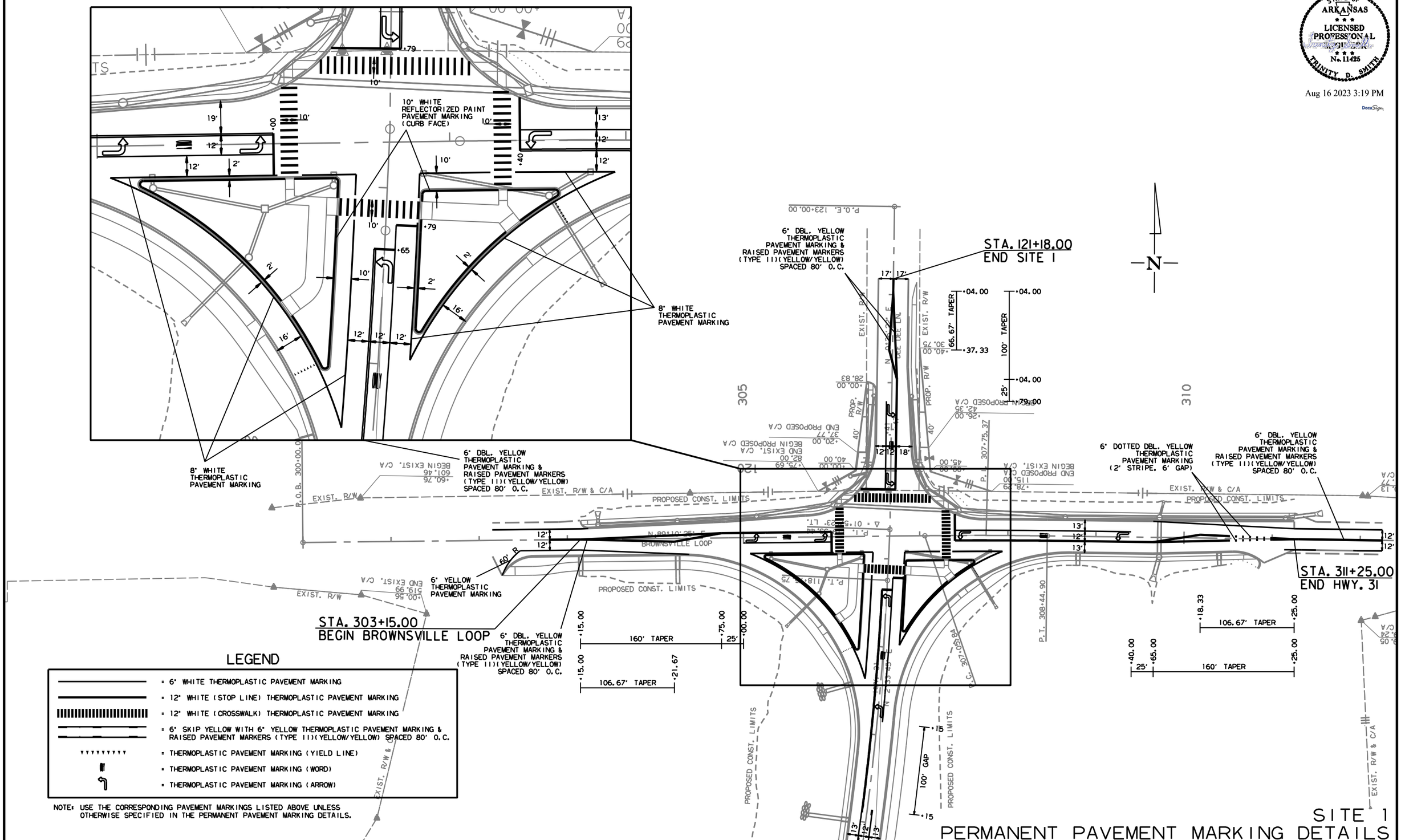

LEGEND

- = 6" WHITE THERMOPLASTIC PAVEMENT MARKING
- = 12" WHITE (STOP LINE) THERMOPLASTIC PAVEMENT MARKING
- = 12" WHITE (CROSSWALK) THERMOPLASTIC PAVEMENT MARKING
- = 6" SKIP YELLOW WITH 6" YELLOW THERMOPLASTIC PAVEMENT MARKING & RAISED PAVEMENT MARKERS (TYPE II)(YELLOW/YELLOW) SPACED 80' O.C.
- = THERMOPLASTIC PAVEMENT MARKING (YIELD LINE)
- = THERMOPLASTIC PAVEMENT MARKING (WORD)
- = THERMOPLASTIC PAVEMENT MARKING (ARROW)

NOTE: USE THE CORRESPONDING PAVEMENT MARKINGS LISTED ABOVE UNLESS OTHERWISE SPECIFIED IN THE PERMANENT PAVEMENT MARKING DETAILS.

SITE 1
PERMANENT PAVEMENT MARKING DETAILS

MM41715 7/24/2023
R061613.DGN

DATE REVISED	DATE REVISED	FED.RD. DIST.NO.	STATE	JOB NO.	SHEET NO.	TOTAL SHEETS
		6	ARK.	061613	47	215

PERMANENT PAVEMENT MARKING DETAILS

STATE OF ARKANSAS
LICENSED PROFESSIONAL ENGINEER
No. 11425
TRINITY D. SMITH

Aug 16 2023 3:19 PM

DocuSign

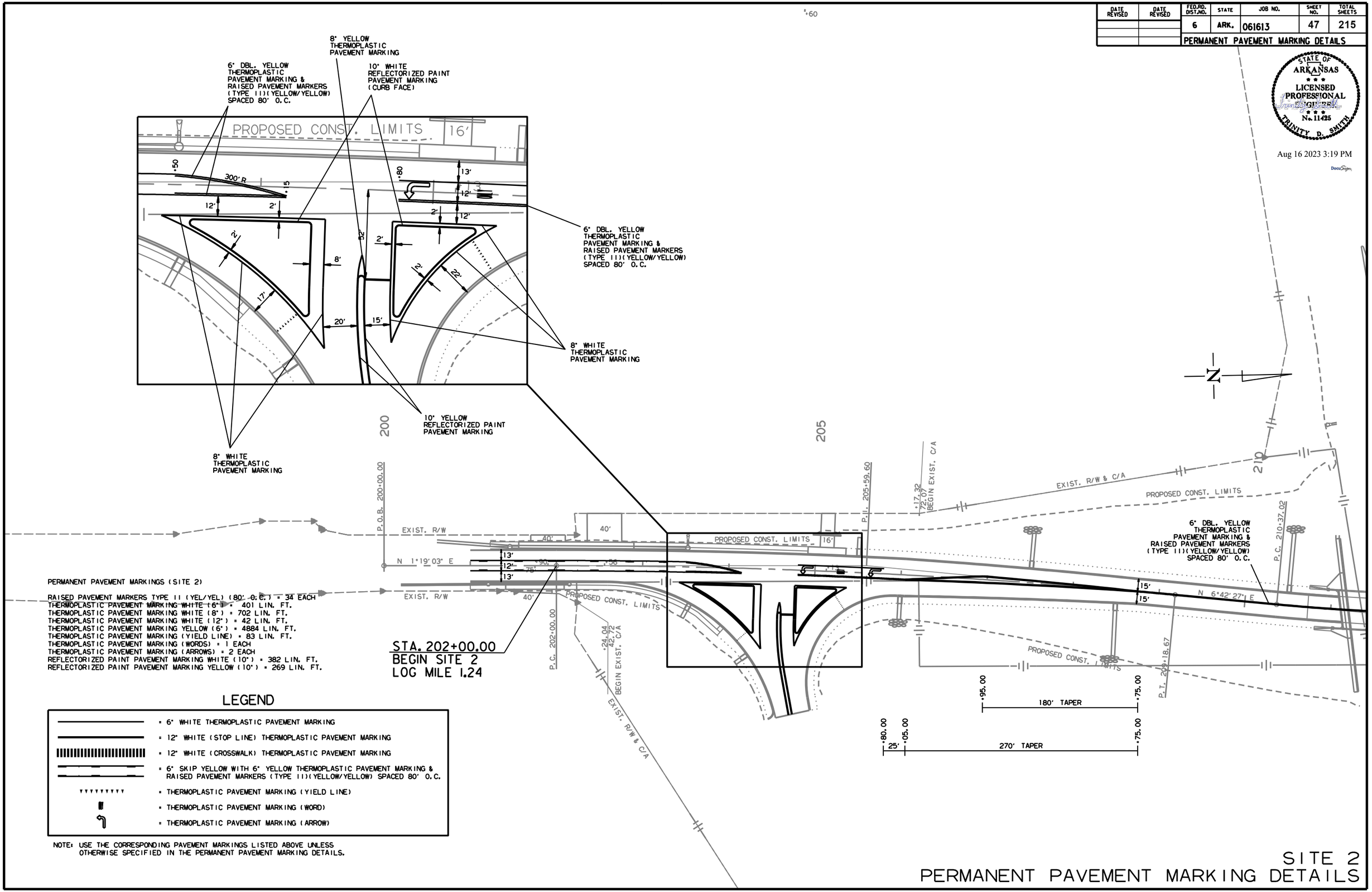

PERMANENT PAVEMENT MARKINGS (SITE 2)

RAISED PAVEMENT MARKERS TYPE II (YEL/YEL) (80' O.C.) = 34 EACH
THERMOPLASTIC PAVEMENT MARKING WHITE (6") = 401 LIN. FT.
THERMOPLASTIC PAVEMENT MARKING WHITE (8") = 702 LIN. FT.
THERMOPLASTIC PAVEMENT MARKING WHITE (12") = 42 LIN. FT.
THERMOPLASTIC PAVEMENT MARKING YELLOW (6") = 4884 LIN. FT.
THERMOPLASTIC PAVEMENT MARKING (YIELD LINE) = 83 LIN. FT.
THERMOPLASTIC PAVEMENT MARKING (WORDS) = 1 EACH
THERMOPLASTIC PAVEMENT MARKING (ARROWS) = 2 EACH
REFLECTORIZED PAINT PAVEMENT MARKING WHITE (10") = 382 LIN. FT.
REFLECTORIZED PAINT PAVEMENT MARKING YELLOW (10") = 269 LIN. FT.

LEGEND

- = 6" WHITE THERMOPLASTIC PAVEMENT MARKING
- = 12" WHITE (STOP LINE) THERMOPLASTIC PAVEMENT MARKING
- = 12" WHITE (CROSSWALK) THERMOPLASTIC PAVEMENT MARKING
- = 6" SKIP YELLOW WITH 6" YELLOW THERMOPLASTIC PAVEMENT MARKING & RAISED PAVEMENT MARKERS (TYPE II)(YELLOW/YELLOW) SPACED 80' O.C.
- = THERMOPLASTIC PAVEMENT MARKING (YIELD LINE)
- = THERMOPLASTIC PAVEMENT MARKING (WORD)
- = THERMOPLASTIC PAVEMENT MARKING (ARROW)

NOTE: USE THE CORRESPONDING PAVEMENT MARKINGS LISTED ABOVE UNLESS OTHERWISE SPECIFIED IN THE PERMANENT PAVEMENT MARKING DETAILS.

SITE 2
PERMANENT PAVEMENT MARKING DETAILS

MM41715 7/24/2023
R061613.DGN

DATE REVISED	DATE REVISED	FED.RD. DIST.NO.	STATE	JOB NO.	SHEET NO.	TOTAL SHEETS
		6	ARK.	061613	48	215
		PERMANENT PAVEMENT MARKING DETAILS				

STATE OF ARKANSAS
LICENSED PROFESSIONAL ENGINEER
No. 11425
TRINITY D. SMITH

Aug 16 2023 3:20 PM

DocuSign

LEGEND

- = 6" WHITE THERMOPLASTIC PAVEMENT MARKING
- = 12" WHITE (STOP LINE) THERMOPLASTIC PAVEMENT MARKING
- = 12" WHITE (CROSSWALK) THERMOPLASTIC PAVEMENT MARKING
- = 6" SKIP YELLOW WITH 6" YELLOW THERMOPLASTIC PAVEMENT MARKING & RAISED PAVEMENT MARKERS (TYPE II)(YELLOW/YELLOW) SPACED 80' O.C.
- = THERMOPLASTIC PAVEMENT MARKING (YIELD LINE)
- = THERMOPLASTIC PAVEMENT MARKING (WORD)
- = THERMOPLASTIC PAVEMENT MARKING (ARROW)

NOTE: USE THE CORRESPONDING PAVEMENT MARKINGS LISTED ABOVE UNLESS OTHERWISE SPECIFIED IN THE PERMANENT PAVEMENT MARKING DETAILS.

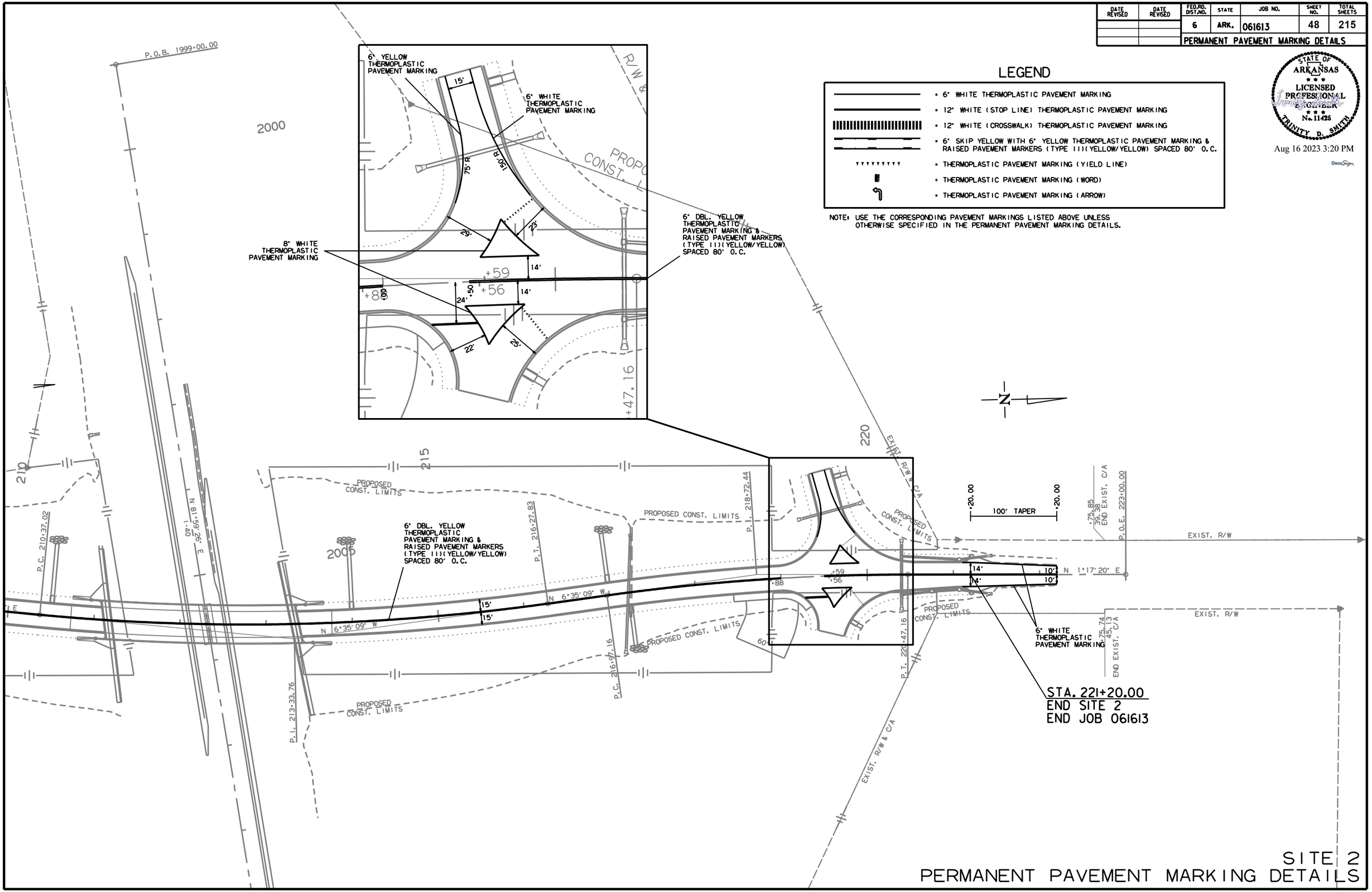

SITE 2
PERMANENT PAVEMENT MARKING DETAILS

MM41715 7/24/2023
R06161 3.DGN

DATE REVISED	DATE REVISED	FED.RD. DIST.NO.	STATE	JOB NO.	SHEET NO.	TOTAL SHEETS
		6	ARK.	061613	49	215
		QUANTITIES				

STATE OF ARKANSAS
LICENSED PROFESSIONAL ENGINEER
No. 11425
TRINITY D. SMITH

Aug 16 2023 3:20 PM

DocuSign

CONSTRUCTION PAVEMENT MARKINGS AND PERMANENT PAVEMENT MARKINGS

DESCRIPTION	STAGE 1	STAGE 2	END OF JOB	CONSTRUCTION PAVEMENT MARKINGS	REMOVABLE CONSTRUCTION PAVEMENT MARKINGS	RAISED PAVEMENT MARKERS	THERMOPLASTIC PAVEMENT MARKING								REFLECTORIZED PAINT PAVEMENT MARKING	
						TYPE II	6"		8"		12"	YIELD LINE	WORDS	ARROWS	10"	
						(YELLOW/YELLOW)	WHITE	YELLOW	WHITE	YELLOW	WHITE				WHITE	YELLOW
	LIN. FT. - EACH			LIN. FT.	LIN. FT.	EACH	LIN. FT.						EACH		LIN. FT.	
CONSTRUCTION PAVEMENT MARKINGS		11680		11680												
REMOVABLE CONSTRUCTION PAVEMENT MARKINGS		1191			1191											
RAISED PAVEMENT MARKERS TYPE II (YELLOW/YELLOW)			85			85										
THERMOPLASTIC PAVEMENT MARKING WHITE (6")			2251				2251									
THERMOPLASTIC PAVEMENT MARKING YELLOW (6")			11512					11512								
THERMOPLASTIC PAVEMENT MARKING WHITE (8")			1646						1646							
THERMOPLASTIC PAVEMENT MARKING YELLOW (8")			90							90						
THERMOPLASTIC PAVEMENT MARKING WHITE (12")			1270								1270					
THERMOPLASTIC PAVEMENT MARKING (YIELD LINE)			136									136				
THERMOPLASTIC PAVEMENT MARKING (WORDS)			6										6			
THERMOPLASTIC PAVEMENT MARKING (ARROWS)			12											12		
REFLECTORIZED PAINT PAVEMENT MARKING WHITE (10")			1076												1076	
REFLECTORIZED PAINT PAVEMENT MARKING YELLOW 10")			269													269
TOTALS:				**11680**	**1191**	**85**	**2251**	**11512**	**1646**	**90**	**1270**	**136**	**6**	**12**	**1076**	**269**

NOTE: THIS IS A HIGH TRAFFIC VOLUME ROAD AS DEFINED IN SECTION 604.03, STANDARD SPECIFICATIONS FOR HIGHWAY CONSTRUCTION.

NOTE: THE 6" YELLOW STRIPING QUANTITY HAS BEEN ESTIMATED BASED ON A DOUBLE YELLOW CENTERLINE STRIPE FOR THE ENTIRE PROJECT.
THE PROJECT MUST BE MARKED FOR PASSING/NO PASSING ZONES PRIOR TO THE PLACEMENT OF ANY FINAL STRIPING.
CONTACT THE MAINTENANCE DIVISION AFTER THE FINAL LIFT OF SURFACE COURSE HAS BEEN PLACED TO SCHEDULE THE ZONING OF THE PROJECT.

ADVANCE WARNING SIGNS AND DEVICES

SIGN NUMBER	DESCRIPTION	SIGN SIZE	STAGE 1	STAGE 2	MAXIMUM NUMBER REQUIRED	TOTAL SIGNS REQUIRED		CONSTRUCTION PROJECT INFORMATION SIGN UPDATE	VERTICAL PANELS	TRAFFIC DRUMS	TRAFFIC CONE	BARRICADES (TYPE III)		FURNISHING & INSTALLING PRECAST CONC. BARRIER	TEMPORARY IMPACT ATTENUATION BARRIER	TEMP. IMPACT ATTEN.BARR. (REPAIR)	* ADVANCE WARNING ARROW PANEL	* PORTABLE CHANGEABLE MESSAGE SIGN	MOBILE SPEED NOTIFICATION SYSTEM (SPECIAL)
												RIGHT	LEFT						
			LIN. FT. - EACH			NO.	SQ. FT.		EACH			LIN. FT.			EACH		DAY	WEEK	EACH
W20-1	ROAD WORK 1 MILE	48"x48"	4	4	4	4	64.0												
W20-1	ROAD WORK 1/2 MILE	48"x48"	4	4	4	4	64.0												
W20-1	ROAD WORK 1500 FT.	48"x48"	12	12	12	12	192.0												
W20-1	ROAD WORK 1000 FT.	48"x48"	6	6	6	6	96.0												
W20-1	ROAD WORK 500 FT.	48"x48"	6	6	6	6	96.0												
W20-1	ROAD WORK AHEAD	48"x48"	11	11	11	11	176.0												
G20-2	END ROAD WORK	48"x24"	15	15	15	15	120.0												
R11-2	ROAD CLOSED	48"x30"	4	4	4	4	40.0												
R55-1	FINES DOUBLE IN WORK ZONES	36"x60"	8	8	8	8	120.0												
W20-5	RIGHT LANE CLOSED 1 MILE	48"x48"	4	4	4	4	64.0												
W20-5	RIGHT LANE CLOSED 1/2 MILE	48"x48"	4	4	4	4	64.0												
W20-5	RIGHT LANE CLOSED 1500 FT.	48"x48"	4	4	4	4	64.0												
SPECIAL	MERGE NOW W/ ARROW	48"x48"	2	2	2	2	32.0												
W3-5	REDUCE SPEED AHEAD (65)	48"x48"	4	4	4	4	64.0												
W1-6	LARGE ARROW	60"x30"	12	12	12	12	150.0												
W4-2 RT.	MERGE RIGHT	48"x48"	4	4	4	4	64.0												
R4-1	DO NOT PASS	48"x60"	8	8	8	8	160.0												
R2-1	SPEED LIMIT 65 MPH	48"x60"	4	4	4	4	80.0												
R2-1	SPEED LIMIT 75MPH	48"x60"	4	4	4	4	80.0												
G20-5aP	WORK ZONE	36"x24"	4	4	4	4	24.0												
OM-3R	OBJECT MARKER	12"x36"	32	32	32	32	96.0												
R10-19aP	PHOTO ENFORCED	48"x36"	4	4	4	4	48.0												
W21-5a	RIGHT SHOULDER CLOSED	36"x36"	6	6	6	6	54.0												
W21-5a	RIGHT SHOULDER CLOSED	48"x48"	4	4	4	4	64.0												
W21-5b	LEFT SHOULDER CLOSED	48"x48"	4	4	4	4	64.0												
R4-1	DO NOT PASS	24"x30"	4	4	4	4	20.0												
W8-1	BUMP	30"x30"	6	6	6	6	37.5												
WZ-1	NOTICE SPEED PHOTO ENFORCED WORK ZONE	84"x60"	4	4	4	4	140.0												
SPECIAL	CONSTRUCTION PROJECT INFORMATION SIGN	96"x48"	2	2	2	2	64.0												
	CONSTRUCTION PROJECT INFORMATION UPDATE							10											
	VERTICAL PANELS		122	137	137				137										
	TRAFFIC DRUMS		213	178	213					213									
	TRAFFIC CONES		18	60	60						60								
	TYPE III BARRICADE-RT. (8')		2	4	4							32							
	TYPE III BARRICADE-LT. (8')		2	4	4								32						
	TYPE III BARRICADE-RT. (16')		2		2							32							
	TYPE III BARRICADE-LT. (16')		2		2								32						
	FURNISHING AND INSTALLING PRECAST CONCRETE BARRIER		5638	5638	5638									5638					
	TEMPORARY IMPACT ATTENUATION BARRIER		2	2	2										2				
	TEMPORARY IMPACT ATTENUATION BARRIER (REPAIR)		2	2	2											2			
	ADVANCE WARNING ARROW PANEL		2	2	2												48		
	PORTABLE CHANGEABLE MESSAGE SIGN		4	4	4													48	
	MOBILE SPEED NOTIFICATION SYSTEM (SPECIAL)		2	2	2														2
TOTALS:							**2401.5**	**10**	**137**	**213**	**60**	**64**	**64**	**5638**	**2**	**2**	**48**	**48**	**2**

NOTE: THIS IS A HIGH TRAFFIC VOLUME ROAD AS DEFINED IN SECTION 604.03, STANDARD SPECIFICATIONS FOR HIGHWAY CONSTRUCTION.

* QUANTITY ESTIMATED.
SEE SECTION 104.03 OF THE STD. SPECS.
TO BE USED IF AND WHERE DIRECTED BY THE ENGINEER.

QUANTITIES

MM41715 7/24/2023
R061613.DGN

DATE REVISED	DATE REVISED	FED.RD. DIST.NO.	STATE	JOB NO.	SHEET NO.	TOTAL SHEETS
		6	ARK.	061613	50	215
		QUANTITIES				

STATE OF ARKANSAS
LICENSED PROFESSIONAL ENGINEER
No. 11425
TRINITY D. SMITH

Aug 16 2023 3:20 PM

DocuSign

CLEARING AND GRUBBING

STATION	STATION	LOCATION	CLEARING	GRUBBING
			STATION	
108+00	111+00	HWY. 31	3	3
113+00	117+00	HWY. 31	4	4
213+00	214+00	HWY. 13	1	1
TOTALS:			8	8

REMOVAL AND DISPOSAL OF FENCE

STATION	STATION	LOCATION	FENCE
			LIN. FT.
305+85	306+38	BROWNSVILLE LOOP LT.	53
307+01	307+82	BROWNSVILLE LOOP LT.	81
2003+67	2004+61	RT. OF I-40	94
TOTAL:			228

REMOVAL AND DISPOSAL OF CULVERTS AND DROP INLETS

STATION	DESCRIPTION	PIPE CULVERTS	DROP INLETS
		EACH	EACH
101+10	HWY. 31 LT.		1
110+11	HWY. 31 LT.	2	
113+02	HWY. 31 LT.	2	
119+62	DEE DEE LN.	1	
201+21	HWY. 13 RT.	1	1
201+46	HWY. 13 LT.	1	1
202+56	HWY. 13 RT.	1	1
203+52	HWY. 13 LT.	1	1
205+13	HWY. 13 LT.	1	
210+74	HWY. 13 LT.	2	
213+68	HWY. 13 LT.	2	
217+25	HWY. 13	1	
219+61	HWY. 13 LT.	1	
220+40	HWY. 13	1	
309+72	BROWNSVILLE LOOP	1	
TOTALS:		18	5

NOTE: QUANTITIES SHOWN ABOVE SHALL INCLUDE REMOVAL & DISPOSAL OF ALL HEADWALLS AND FLARED END SECTIONS IF APPLICABLE.

REMOVAL AND DISPOSAL OF ITEMS

STATION	STATION	LOCATION	CURB AND GUTTER	CONCRETE PAVEMENT	CONCRETE ISLANDS	CONCRETE DRIVEWAYS	WALKS	CONCRETE DITCH PAVING	WIRE ROPE SAFETY FENCE	GUARDRAIL	CONCRETE PIER PROTECTION
			LIN. FT.	SQ. YD.	SQ. YD.	SQ. YD.	SQ. YD.	LIN. FT.	LIN. FT.	LIN. FT.	LIN. FT.
101+00	101+45	HWY. 31 LT.	103								
101+67	101+67	HWY. 31 LT.				342					
101+86	102+06	HWY. 31 LT.	86								
103+03	103+03	HWY. 31 LT.		410							
103+12	103+12	HWY. 31 LT.		318							
109+32	110+05	HWY. 31 LT.								75	
109+43	110+16	HWY. 31 RT.								75	
112+88	113+63	HWY. 31 LT.								75	
112+96	113+70	HWY. 31 RT.								75	
117+81	118+06	HWY. 31 LT.	26								
117+84	119+16	HWY. 31 RT.	287								
119+63	120+09	DEE DEE LN. LT.	131								
119+54	120+26	DEE DEE LN. RT.	198								
120+41	120+41	DEE DEE LN. LT.				100					
120+47	120+47	DEE DEE LN. RT.				125					
120+61	121+01	HWY. 31 LT.	38								
120+68	121+77	HWY. 31 RT.	119								
201+00	201+48	HWY. 13 RT.					27				
201+00	203+20	HWY. 13 RT.	211								
201+23	205+03	HWY. 13 LT.	371								
201+23	201+64	HWY. 13 LT.					23				
201+90	201+90	HWY. 13 LT.				37					
202+00	203+19	HWY. 13 RT.					66				
202+16	202+32	HWY. 13 LT.					9				
202+56	202+56	HWY. 13 LT.				147					
202+80	205+03	HWY. 13 LT.					124				
204+60	204+60	HWY. 13 RT.		759	72						
209+99	210+72	HWY. 13 LT.								75	
210+07	210+76	HWY. 13 RT.								75	
213+57	214+34	HWY. 13 LT.								75	
213+62	214+37	HWY. 13 RT.								75	
219+56	219+56	HWY. 13 RT.		227							
219+59	219+59	HWY. 13 LT.		310							
305+24	306+32	BROWNSVILLE LOOP RT.	120								
307+38	308+27	BROWNSVILLE LOOP LT.	102								
1002+14	1004+40	I-40 E.B.L. LT.							226		
1000+54	1000+87	I-40 E.B.L. LT.						15			
1000+89	1005+93	I-40 E.B.L. LT.								504	
1001+90	1004+61	I-40 E.B.L. RT.								271	
1003+94	1009+23	I-40 W.B.L. RT.								529	
1004+78	1004+78	I-40 E.B.L. RT.									31
1005+23	1005+23	I-40 W.B.L. LT.									31
1005+39	1008+09	I-40 W.B.L. LT.								270	
1005+62	1006+14	I-40 E.B.L. LT.							52		
1006+36	1007+74	I-40 E.B.L. LT.						61			
2001+00	2006+04	I-40 E.B.L. LT.								504	
2001+44	2004+14	I-40 E.B.L. RT.								270	
2002+78	2003+50	I-40 W.B.L. RT.						32			
2003+81	2008+85	I-40 W.B.L. RT.								504	
2004+87	2004+87	I-40 E.B.L. RT.									150
2005+19	2005+19	I-40 W.B.L. LT.									150
2006+30	2009+01	I-40 W.B.L. RT.							271		
2005+86	2008+56	I-40 W.B.L. LT.								270	
2009+08	2010+61	I-40 W.B.L. RT.						68			
TOTALS:			1792	2024	72	751	249	176	549	3722	362

NOTE: THE QUANTITY SHOWN ABOVE FOR THE REMOVAL AND DISPOSAL OF GUARDRAIL SHALL INCLUDE THE REMOVAL AND DISPOSAL OF ALL GUARDRAIL TERMINALS AND TERMINAL ANCHOR POSTS.

MM41715 7/24/2023
R061613.DGN

QUANTITIES

DATE REVISED	DATE REVISED	FED.RD. DIST.NO.	STATE	JOB NO.	SHEET NO.	TOTAL SHEETS
		6	ARK.	061613	51	215
		QUANTITIES				

STATE OF ARKANSAS
LICENSED PROFESSIONAL ENGINEER
No. 11425
TRINITY D. SMITH

Aug 16 2023 3:20 PM

DocuSign

CONCRETE DITCH PAVING

STATION	STATION	LOCATION	LENGTH	"W"	CONC. DITCH PAVING (TYPE B)	SOLID SODDING	WATER
			LIN. FT.	FEET	SQ. YD.	SQ. YD.	M. GAL.
102+61.00	102+61.00	HWY. 31 - EMBANKMENT SLOPE ON LT.	13.51	4.00	6.00	6.00	0.08
102+98.00	102+98.00	HWY. 31 - EMBANKMENT SLOPE ON RT.	10.03	4.00	4.46	4.46	0.06
103+85.00	103+85.00	HWY. 31 - EMBANKMENT SLOPE ON LT.	4.39	4.00	1.95	1.95	0.02
103+85.00	103+85.00	HWY. 31 - EMBANKMENT SLOPE ON RT.	13.85	4.00	6.16	6.16	0.08
106+00.00	106+00.00	HWY. 31 - EMBANKMENT SLOPE ON RT.	42.11	4.00	18.72	18.72	0.24
107+00.00	107+00.00	HWY. 31 - EMBANKMENT SLOPE ON LT.	52.87	4.00	23.50	23.50	0.30
110+00.00	110+00.00	HWY. 31 - EMBANKMENT SLOPE ON LT.	78.54	4.00	34.91	34.91	0.44
113+25.00	113+25.00	HWY. 31 - EMBANKMENT SLOPE ON LT.	72.39	4.00	32.17	32.17	0.41
114+60.00	114+60.00	HWY. 31 - EMBANKMENT SLOPE ON LT.	57.12	4.00	25.39	25.39	0.32
116+00.00	116+00.00	HWY. 31 - EMBANKMENT SLOPE ON LT.	37.13	4.00	16.50	16.50	0.21
117+55.00	117+55.00	HWY. 31 - EMBANKMENT SLOPE ON LT.	24.70	4.00	10.98	10.98	0.14
203+55.00	203+55.00	HWY. 13 - EMBANKMENT SLOPE ON RT.	7.84	4.00	3.48	3.48	0.04
204+24.00	204+24.00	HWY. 13 - EMBANKMENT SLOPE ON RT.	5.87	4.00	2.61	2.61	0.03
205+50.00	205+50.00	HWY. 13 - EMBANKMENT SLOPE ON LT.	5.87	4.00	2.61	2.61	0.03
206+00.00	206+00.00	HWY. 13 - EMBANKMENT SLOPE ON RT.	17.23	4.00	7.66	7.66	0.10
207+50.00	207+50.00	HWY. 13 - EMBANKMENT SLOPE ON LT.	31.29	4.00	13.91	13.91	0.18
208+50.00	208+50.00	HWY. 13 - EMBANKMENT SLOPE ON RT.	55.94	4.00	24.86	24.86	0.31
210+50.00	210+50.00	HWY. 13 - EMBANKMENT SLOPE ON LT.	66.88	4.00	29.72	29.72	0.37
214+00.00	214+00.00	HWY. 13 - EMBANKMENT SLOPE ON LT.	74.28	4.00	33.01	33.01	0.42
217+00.00	217+00.00	HWY. 13 - EMBANKMENT SLOPE ON LT.	48.81	4.00	21.69	21.69	0.27
217+23.00	217+23.00	HWY. 13 - EMBANKMENT SLOPE ON RT.	41.47	4.00	18.43	18.43	0.23
219+65.00	219+65.00	HWY. 13 - EMBANKMENT SLOPE ON LT.	5.81	4.00	2.58	2.58	0.03
219+80.00	219+80.00	HWY. 13 - EMBANKMENT SLOPE ON RT.	4.34	4.00	1.93	1.93	0.02
303+15.00	303+15.00	BROWNSVILLE LOOP - EMBANKMENT SLOPE ON RT.	3.85	4.00	1.71	1.71	0.02
304+25.00	304+25.00	BROWNSVILLE LOOP - EMBANKMENT SLOPE ON RT.	14.18	4.00	6.30	6.30	0.08
308+80.00	308+80.00	BROWNSVILLE LOOP - EMBANKMENT SLOPE ON RT.	3.56	4.00	1.58	1.58	0.02
310+40.00	310+40.00	BROWNSVILLE LOOP - EMBANKMENT SLOPE ON RT.	4.53	4.00	2.01	2.01	0.03
1000+54.00	1001+54.00	I-40 E.B.L. LT.	100.00	4.00	44.44	44.44	0.56
1006+74.00	1007+74.00	I-40 E.B.L. LT.	100.00	4.00	44.44	44.44	0.56
2002+78.00	2004+41.00	I-40 W.B.L. RT.	163.00	4.00	72.44	72.44	0.91
2009+61.00	2010+61.00	I-40 W.B.L. RT.	100.00	4.00	44.44	44.44	0.56
TOTALS:					**560.59**	**560.59**	**7.07**

BASIS OF ESTIMATE:
WATER.....12.6 GAL. / SQ. YD. OF SOLID SODDING.

EARTHWORK

STATION	STATION	LOCATION / DESCRIPTION	UNCLASSIFIED EXCAVATION		*COMPACTED EMBANKMENT	
			FAP BFP-0043(37)	FAP TAPU-0043(37)	FAP BFP-0043(37)	FAP TAPU-0043(37)
			CU. YD.			
101+00	119+00	HWY. 31 / STAGE 1	273		40215	6806
101+00	119+00	HWY. 31 / STAGE 2	17295		944	406
119+80	122+18	DEE DEE LN. / STAGE 1	15		33	
119+80	122+18	DEE DEE LN. / STAGE 2	52		16	
201+00	222+20	HWY. 13 / STAGE 1	103		28065	
201+00	222+20	HWY. 13 / STAGE 2	17612		537	
302+15	312+25	BROWNSVILLE LOOP / STAGE 1	27		608	
302+15	312+25	BROWNSVILLE LOOP / STAGE 2	82		1061	208
1001+65	1008+50	I-40 SITE 1 / STAGE 1	2711			
2001+70	2008+00	I-40 SITE 2 / STAGE 1	2414		119	
ENTIRE	PROJECT	APPROACHES	5		615	
110+57	111+09	CHANNEL CHANGE	72			
1004+25	1006+44	MSE RETAINING WALL NO. 1	4555	117		
1005+00	1007+12	MSE RETAINING WALL NO. 2	1436	43		
2004+52	2006+30	MSE RETAINING WALL NO. 3	1518			
2005+00	2006+81	MSE RETAINING WALL NO. 4	1268			
1004+25	1006+44	TEMP. MSE RETAINING WALL NO. 1	296			
1005+00	1007+12	TEMP. MSE RETAINING WALL NO. 2	434			
2004+52	2006+30	TEMP. MSE RETAINING WALL NO. 3	448			
2005+00	2006+81	TEMP. MSE RETAINING WALL NO. 4	414			
TOTALS:			**51030**	**160**	**72213**	**7420**

* 1816 CU. YDS. DEDUCTED FROM COMPACTED EMBANKMENT VOLUME AS DETERMINED BY THE END AREA METHOD TO ACCOUNT FOR SELECT GRANULAR BACKFILL BEHIND RETAINING WALLS (1101 CU. YDS. SITE 1 STAGE 1 AND 715 CU. YDS. SITE 2 STAGE 1)

SOIL STABILIZATION

STATION	STATION	LOCATION / DESCRIPTION	SOIL STABILIZATION
			TON
ENTIRE	PROJECT	TO BE USED IF AND WHERE	400
		DIRECTED BY THE ENGINEER	
TOTAL:			**400**

QUANTITY ESTIMATED.
SEE SECTION 104.03 OF THE STD. SPECS.

BENCH MARKS

STATION	LOCATION	BENCH MARKS
		EACH
110+57	HWY. 31 - BRIDGE END	1
211+11	HWY. 13 - BRIDGE END	1
TOTAL:		**2**

NOTE: SHOWN FOR INFORMATION ONLY. BENCH MARKS SHALL BE FURNISHED AND PLACED BY STATE FORCES.

EROSION CONTROL

STATION	STATION	LOCATION	PERMANENT EROSION CONTROL						TEMPORARY EROSION CONTROL						
			SEEDING	LIME	MULCH COVER	WATER	SECOND SEEDING APPLICATION	SOLID SODDING	TEMPORARY SEEDING	MULCH COVER	WATER	ROCK DITCH CHECKS (E-6)	SILT FENCE (E-11)	FILTER SOCK (12") (E-13)	*SEDIMENT REMOVAL & DISPOSAL
			ACRE	TON	ACRE	M.GAL.	ACRE	SQ.YD.	ACRE	ACRE	M.GAL.	CU.YD.	LIN. FT.	LIN. FT.	CU. YD.
ENTIRE	SITE	SITE 1 - CLEARING AND GRUBBING							4.71	4.71	96.1	69		69	26
ENTIRE	SITE	SITE 1 - STAGE 1	1.98	3.96	1.98	202.0	1.98		1.98	1.98	40.4	15		295	16
ENTIRE	SITE	SITE 1 - STAGE 2	2.73	5.46	2.73	314.5	2.73	2858	2.73	2.73	55.7	12		310	15
ENTIRE	SITE	SITE 2 - CLEARING AND GRUBBING							3.73	3.73	76.1	66	1384	23	52
ENTIRE	SITE	SITE 2 - STAGE 1	1.43	2.86	1.43	145.9	1.43		1.43	1.43	29.2			92	25
ENTIRE	SITE	SITE 2 - STAGE 2	2.30	4.60	2.30	236.6	2.30	161	2.30	2.30	46.9	21		77	
*ENTIRE PROJECT TO BE USED IF AND WHERE DIRECTED BY THE ENGINEER.			2.11	4.22	2.11	215.2	2.11		4.22	4.22	86.1	45	346	217	43
TOTALS:			**10.55**	**21.10**	**10.55**	**1114.2**	**10.55**	**3019**	**21.10**	**21.10**	**430.5**	**228**	**1730**	**1083**	**177**

BASIS OF ESTIMATE:
LIME .....2 TONS / ACRE OF SEEDING
WATER.....102.0 M.G. / ACRE OF SEEDING
WATER.....20.4 M.G. / ACRE OF TEMPORARY SEEDING
WATER.....12.6 GAL. / SQ. YD. OF SOLID SODDING
ROCK DITCH CHECKS.....3 CU.YD./LOCATION
FILTER SOCKS.....23 LIN. FT. / 4' DIA. INLET
27 LIN. FT. / 5' DIA. INLET
30 LIN. FT. / 6' DIA. INLET

NOTE: THE TEMPORARY EROSION CONTROL DEVICES SHOWN ABOVE AND ON THE PLANS SHALL BE INSTALLED IN SUCH A SEQUENCE AS TO DETER EROSION AND SEDIMENTATION ON U.S. WATERWAYS AS EXPLAINED BY THE NATIONAL POLLUTANT DISCHARGE ELIMINATION SYSTEM PERMIT.

*QUANTITIES ESTIMATED.
SEE SECTION 104.03 OF THE STD. SPECS.

QUANTITIES

DATE REVISED	DATE REVISED	FED.RD. DIST.NO.	STATE	JOB NO.	SHEET NO.	TOTAL SHEETS
		6	ARK.	061613	52	215
		QUANTITIES				

STATE OF ARKANSAS
LICENSED PROFESSIONAL ENGINEER
No. 11425
TRINITY D. SMITH

Aug 16 2023 3:20 PM

DocuSign

GUARDRAIL

STATION	STATION	LOCATION	GUARDRAIL (TYPE A)	GUARDRAIL TERMINAL (TYPE 2)	TERMINAL ANCHOR POST (TYPE 1)
			LIN. FT.	EACH	
1001+63.94	1006+63.94	I-40 E.B.L. LT.	450	1	1
1004+68.01	1009+68.01	I-40 W.B.L. RT.	450	1	1
2001+64.60	2006+64.60	I-40 E.B.L. LT.	450	1	1
2004+50.57	2009+50.57	I-40 W.B.L. RT.	450	1	1
TOTALS:			1800	4	4

WIRE ROPE SAFETY FENCE

STATION	STATION	LOCATION	WIRE ROPE SAFETY FENCE - REMOVE AND RECONSTRUCT	WIRE ROPE SAFETY FENCE (POST REPAIR)	TEMPORARY TERMINAL ANCHOR FOR WIRE ROPE SAFETY FENCE
			LIN. FT.	EACH	EACH
1000+53.94	1002+13.94	I-40 E.B.L. LT.	160		
1006+13.94	1007+74.02	I-40 E.B.L. LT.	160		
2002+78.21	2005+00.58	I-40 W.B.L. RT.	222		
2009+00.57	2010+60.58	I 40 W.B.L. RT.	160		
* ENTIRE PROJECT TO BE USED IF AND				30	4
WHERE DIRECTED BY THE ENGINEER.					
TOTAL:			702	30	4

* NOTE: QUANTITY ESTIMATED.
SEE SECTION 104.03 OF THE STD. SPECS.

CONCRETE WALKS

STATION	STATION	LOCATION	CONCRETE WALKS FAP BFP-0043(37)	CONCRETE WALKS FAP TAPU-0043(37)
			SQ.YD.	
101+00	102+55	HWY. 31 LT.	52	
101+48	102+72	HWY. 31 RT.	70	70
103+46	110+66	HWY. 31 RT.	407	407
103+57	110+51	HWY. 31 LT.	390	
112+73	118+86	HWY. 31 LT.	407	130
112+87	119+13	HWY. 31 RT.	401	358
118+28	118+97	HWY. 31 LT. - ISLAND	49	32
118+83	118+96	HWY. 31 RT. - ISLAND	27	23
119+51	121+89	DEE DEE LN. RT.	117	
119+52	120+91	DEE DEE LN. LT.	60	
302+40	304+28	BROWNSVILLE LOOP RT.	105	104
303+23	305+71	BROWNSVILLE LOOP LT.	134	
307+71	311+19	BROWNSVILLE LOOP LT.	193	
308+74	310+68	BROWNSVILLE LOOP RT.	108	
201+00	203+92	HWY. 13 RT.	130	
201+23	204+91	HWY. 13 LT.	131	
TOTAL:			2781	1124

CONCRETE COMBINATION CURB AND GUTTER

STATION	STATION	LOCATION	TYPE A (1' 6")	TYPE D (6")
			LIN. FT.	LIN. FT.
101+00	102+83	HWY. 31 LT.	225	
101+32	103+00	HWY. 31 RT.	236	
103+24	110+16	HWY. 31 LT.	722	
103+24	110+16	HWY. 31 RT.	719	
113+21	118+93	HWY. 31 LT.	695	
113+21	119+17	HWY. 31 RT.	707	
117+95	119+04	HWY. 31 LT. - ISLAND	373	
118+19	119+03	HWY. 31 RT. - ISLAND	272	
119+47	121+76	DEE DEE LN. RT.	275	
119+49	121+00	DEE DEE LN. LT.	202	
119+84	120+21	DEE DEE LN. LT. - R/W		62
302+27	304+28	BROWNSVILLE LOOP RT.	209	
303+16	305+71	BROWNSVILLE LOOP LT.	260	
307+71	311+25	BROWNSVILLE LOOP LT.	354	
308+74	310+86	BROWNSVILLE LOOP RT.	223	
201+00	204+57	HWY. 13 RT.	432	
201+00	210+73	HWY. 13 LT.	975	
204+95	210+73	HWY. 13 RT.	671	
213+76	219+41	HWY. 13 RT.	595	
213+76	219+46	HWY. 13 LT.	654	
219+62	221+19	HWY. 13 LT.	228	
219+72	221+19	HWY. 13 RT.	175	
TOTALS:			9202	62

CONCRETE ISLAND

STATION	LOCATION	CURB FACE TYPE	CONCRETE ISLAND
			SQ.YD.
102+85	HWY. 31 LT.	C	65
204+00	HWY. 13 RT.	C	207
204+60	HWY. 13 RT.	C	53
205+00	HWY. 13 RT.	C	132
TOTAL:			457

MAILBOXES

LOCATION	MAILBOXES	MAILBOX SUPPORTS (SINGLE)
	EACH	
DEE DEE LN.	2	2
TOTALS:	2	2

WHEELCHAIR RAMPS

STATION	LOCATION	TYPE 2	TYPE 3 FAP BFP-0043(37)	TYPE 3 FAP TAPU-0043(37)
		SQ.YD.		
101+43	HWY. 31 RT.		5.4	5.4
102+55	HWY. 31 LT.		3.3	
102+69	HWY. 31 RT.		4.1	
102+76	HWY. 31 RT.		5.4	5.3
103+40	HWY. 31 RT.		7.0	7.0
103+52	HWY. 31 LT.		5.3	
118+14	HWY. 31 LT.		3.6	3.6
118+30	HWY. 31 LT.		3.3	3.3
118+66	HWY. 31 RT.		3.6	3.6
118+83	HWY. 31 RT.		3.3	3.3
118+88	HWY. 31 LT.		3.4	3.3
118+88	HWY. 31 RT.		3.4	3.3
119+69	DEE DEE LN. LT.	11.8		
119+69	DEE DEE LN. RT.	12.6		
120+95	DEE DEE LN. LT.		4.1	
122+00	DEE DEE LN. RT.		9.4	
302+35	BROWNSVILLE LOOP RT.		5.7	5.7
303+20	BROWNSVILLE LOOP LT.		3.9	
306+09	BROWNSVILLE LOOP RT.		3.3	
307+30	BROWNSVILLE LOOP RT.		3.3	
310+72	BROWNSVILLE LOOP RT.		5.6	
311+22	BROWNSVILLE LOOP LT.		3.3	
203+91	HWY. 13 RT.		3.3	
TOTALS:		24.4	93.0	43.8

4" PIPE UNDERDRAIN

STATION	STATION	LOCATIONS	4" PIPE UNDERDRAINS	UNDERDRAIN OUTLET PROTECTORS
			LIN. FT.	EACH
* ENTIRE PROJECT TO BE USED IF AND			2000	8
WHERE DIRECTED BY THE ENGINEER				
TOTALS:			2000	8

* NOTE: QUANTITY ESTIMATED.
SEE SECTION 104.03 OF THE STD. SPECS.

UNDERDRAINS SHALL BE STUBBED INTO THE PROPOSED DROP INLET IF AND WHERE DIRECTED BY THE ENGINEER. PAYMENT FOR THIS TO BE INCLUDED IN THE UNIT PRICE BID FOR 4" PIPE UNDERDRAIN.

FENCING

STATION	STATION	LOCATION	WIRE FENCE (TYPE A)
			LIN. FT.
119+76	119+84	DEE DEE LN. LT.	17
119+78	120+26	DEE DEE LN. RT.	100
TOTAL:			117

CULVERT CLEAN OUT

STATION	LOCATION	EACH
1003+68	I-40 LT. & RT.	2
1006+96	I-40 LT. & RT.	2
2003+19	I-40 LT. & RT.	2
TOTAL:		6

QUANTITIES

MM41715 7/24/2023
R061613.DGN

DATE REVISED	DATE REVISED	FED.RD. DIST.NO.	STATE	JOB NO.	SHEET NO.	TOTAL SHEETS
		6	ARK.	061613	53	215
		QUANTITIES				

STATE OF ARKANSAS
LICENSED PROFESSIONAL ENGINEER
No. 11425
TRINITY D. SMITH

Aug 16 2023 3:21 PM

DocuSign

ACHM PATCHING OF EXISTING ROADWAY

DESCRIPTION	TON
ENTIRE PROJECT - TO BE USED IF AND WHERE	20
DIRECTED BY THE ENGINEER	
TOTAL:	**20**

NOTE: QUANTITY ESTIMATED.
SEE SECTION 104.03 OF THE STD. SPECS.

APPROACH GUTTERS AND SLABS

STATION	STATION	LOCATION	APPROACH SLABS (TYPE SPECIAL)	REINFORCING STEEL-RDWY. (GR. 60)	AGGREGATE BASE CRS. (CLASS 7)
			CU.YD.	POUND	TON
110+16.22	110+57.25	HWY. 31 - TYPE 1 SPECIAL	100.08	12573	1591.25
112+79.51	113+21.08	HWY. 31 - TYPE 2 SPECIAL	98.33	12302	1568.83
210+73.26	211+11.13	HWY. 31 - TYPE 3 SPECIAL	66.03	7989	1041.77
213+38.33	213+76.20	HWY. 31 - TYPE 4 SPECIAL	65.37	7890	1033.12
TOTALS:			**329.81**	**40754**	**5234.97**

SELECTED PIPE BEDDING

LOCATION	SELECTED PIPE BEDDING
	CU.YD.
ENTIRE PROJECT TO BE USED IF	
AND WHERE DIRECTED BY THE	250
ENGINEER	
TOTAL:	**250**

NOTE: QUANTITY ESTIMATED.
SEE SECTION 104.03 OF THE STD. SPECS.

RETAINING WALLS

STATION	STATION	LOCATION	CONCRETE DITCH PAVING (TYPE B)		SELECT GRANULAR BACKFILL		AGGREGATE BASE COURSE (CLASS 7)		RETAINING WALL		TEXTURED COATING FINISH		TEMPORARY RETAINING WALL
			FAP BFP-0043(37)	FAP TAPU-0043(37)	FAP BFP-0043(37)	FAP TAPU-0043(37)	FAP BFP-0043(37)	FAP TAPU-0043(37)	FAP BFP-0043(37)	FAP TAPU-0043(37)	FAP BFP-0043(37)	FAP TAPU-0043(37)	
			SQ. YD.		CU. YD.		TON		SQ. FT.		SQ. YD.		SQ. FT.
1004+25	1006+44	I-40 RT. (WALL NO. 1)	121	3	2731	70	1161	30	4935	127	488	13	
1005+00	1007+12	I-40 LT. (WALL NO. 2)	106	3	2393	71	73	2	3914	117	391	12	
2004+52	2006+30	I-40 RT. (WALL NO. 3)	86		2045		75		3144		303		
2005+00	2006+81	I-40 LT. (WALL NO. 4)	88		1992		75		3198		310		
1004+25	1006+44	I-40 RT. (TEMP. WALL NO. 1)			302		38						1264
1005+00	1007+12	I-40 LT. (TEMP. WALL NO. 2)			504		23						1235
2004+52	2006+30	I-40 RT. (TEMP. WALL NO. 3)			492		22						1296
2005+00	2006+81	I-40 LT. (TEMP. WALL NO. 4)			464		20						1248
TOTALS:			401	6	10923	141	1487	32	15191	244	1492	25	5043

PAVEMENT REPAIR OVER CULVERTS (ASPHALT)

STATION	LOCATION	WIDTH	LENGTH	TON
		FEET		
118+55	HWY. 31	7.92	17	10
118+98	HWY. 31	7.92	26	15
217+22	HWY. 13	8.50	26	16
217+25	HWY. 13	8.50	26	16
220+40	HWY. 13	8.50	27	17
219+60	HWY. 13	8.50	30	19
306+02	BROWNSVILLE LOOP	10.25	86	65
309+72	BROWNSVILLE LOOP	10.83	38	30
TOTAL:				**188**

AVG. DEPTH = 12"

ASPHALT CONCRETE PATCHING FOR MAINTENANCE OF TRAFFIC

LOCATION	TON	TACK COAT
		GALLON
ENTIRE PROJECT - TO BE USED IF AND WHERE	20	40
DIRECTED BY THE ENGINEER		
TOTALS:	**20**	**40**

BASIS OF ESTIMATE:
ASPHALT CONCRETE PATCHING FOR MAINTENANCE OF TRAFFIC....25 TON/MILE
TACK COAT FOR MAINTENANCE OF TRAFFIC.....50 GAL./MILE
NOTE: QUANTITY ESTIMATED.
SEE SECTION 104.03 OF THE STD. SPECS.

COLD MILLING ASPHALT PAVEMENT

STATION	STATION	LOCATION	AVG. WIDTH	COLD MILLING ASPHALT PAVEMENT
			FEET	SQ. YD.
101+00.00	102+00.00	HWY. 31	VAR.	492.70
121+18.00	122+18.00	DEE DEE LN.	34.00	377.78
302+15.00	303+15.00	BROWNSVILLE LOOP	VAR.	463.67
311+25.00	312+25.00	BROWNSVILLE LOOP	36.00	400.00
201+00.00	202+00.00	HWY. 13	36.00	400.00
221+20.00	222+20.00	HWY. 13	20.00	222.22
TOTAL:				**2356.37**

COORDINATE COLD MILLING STOCKPILE LOCATIONS WITH DISTRICT ENGINEER.
STOCKPILE LOCATIONS SHALL BE NO FURTHER THAN FIVE MILES FROM EACH SITE.

DRIVEWAYS

STATION	SIDE	LOCATION	WIDTH	**MODIFIED CURB		PORTLAND CEMENT CONCRETE DRIVEWAY	ACHM SURFACE COURSE (1/2") 220 LBS. PER SQ. YD. (PG 64-22)		AGGREGATE BASE COURSE (CLASS 7)	SIDE DRAINS 18"	STANDARD DRAWINGS
			FEET	STATION	STATION	SQ. YD.	SQ. YD.	TON	TON	LIN. FT.	
101+67	LT.	HWY. 31	40	101+33	102+01	338.97					DR-1
120+41	LT.	DEE DEE LANE	40	120+07	120+75	100.04					DR-1
120+47	RT.	DEE DEE LANE	40	120+13	120+81	100.35					DR-1
201+75	RT.	HWY. 13	40	201+41	202+09	60.44	16.53	1.82	6.75		DR-1
201+90	LT.	HWY. 13	40	201+56	202+24	96.31					DR-1
202+56	LT.	HWY. 13	40	202+22	202+90	208.31					DR-1
205+13	LT.	HWY. 13	16	204+91	205+35	39.11	70.22	7.72	28.67	32	DR-1,PCC-1, PCM-1, PCP-1, PCP-2, PCP-3
218+88	RT.	HWY. 13	60	218+44	219+32	78.22	400.00	44.00	163.33		DR-1
* ENTIRE PROJECT TEMPORARY DRIVES									80.00		
TOTALS:						**1021.75**	**486.75**	**53.54**	**278.75**	**32**	

BASIS OF ESTIMATE:
ACHM SURFACE COURSE (1/2").....94.8% MIN. AGGR.....5.2% ASPHALT BINDER
MAXIMUM NUMBER OF GYRATIONS = 115 FOR PG 64-22

THE CONTRACTOR, WITH THE APPROVAL OF THE ENGINEER, WILL BE ALLOWED TO SUBSTITUTE A HIGHER PERFORMANCE GRADE ASPHALT SURFACE COURSE FOR DRIVEWAYS AND MINOR SIDE STREET CONSTRUCTION AT NO ADDITIONAL COST TO THE DEPARTMENT.

* QUANTITY ESTIMATED
SEE SECTION 104.03 OF THE STD. SPECS.
TO BE USED IF AND WHERE DIRECTED BY THE ENGINEER.

** FOR INFORMATION ONLY

NOTE: FOR R.C. PIPE CULVERT INSTALLATIONS USE TYPE 3 BEDDING UNLESS OTHERWISE SPECIFIED.
NOTE: FOR C.M. PIPE CULVERT INSTALLATIONS USE TYPE 2 BEDDING UNLESS OTHERWISE SPECIFIED.

DUMPED RIPRAP AND FILTER BLANKET

STATION	LOCATION	DUMPED RIPRAP	FILTER BLANKET
		CU. YD.	SQ. YD.
106+00	HWY. 31 RT.	4	8
107+00	HWY. 31 LT.	4	8
110+00	HWY. 31 LT.	4	8
113+25	HWY. 31 LT.	4	8
114+60	HWY. 31 LT.	4	8
116+00	HWY. 31 LT.	4	8
117+55	HWY. 31 LT.	4	8
206+00	HWY. 13 RT.	4	8
207+50	HWY. 13 LT.	4	8
208+50	HWY. 13 RT.	4	8
210+50	HWY. 13 LT.	4	8
214+00	HWY. 13 LT.	4	8
217+00	HWY. 13 LT.	4	8
217+23	HWY. 13 RT.	4	8
	TO BE USED IF AND WHERE	8	16
	DIRECTED BY THE ENGINEER		
TOTALS:		**64**	**128**

*NOTE: QUANTITY ESTIMATED.
SEE SECTION 104.03 OF THE STANDARD SPECIFICATIONS

NOTE: FILTER BLANKET SHALL BE GEOTEXTILE FABRIC (TYPE 5).

MM41715 7/24/2023
R061613.DGN

QUANTITIES

DATE REVISED	DATE REVISED	FED.RD. DIST.NO.	STATE	JOB NO.	SHEET NO.	TOTAL SHEETS
		6	ARK.	061613	54	215
		QUANTITIES				

STATE OF ARKANSAS
LICENSED PROFESSIONAL ENGINEER
No. 11425
TRINITY D. SMITH

Aug 16 2023 3:21 PM

DocuSign

STRUCTURES

STATION	DESCRIPTION	REINFORCED CONCRETE PIPE CULVERT (CLASS III) 18"	(CLASS III) 24"	(CLASS III) 36"	(CLASS III) 42"	(CLASS III) 48"	(CLASS IV) 18"	(CLASS IV) 24"	(CLASS V) 18"	(CLASS V) 42"	(CLASS V) 48"	SIDE DRAIN 12"	PIPE CULVERT STORM DRAIN ALTERNATES 1 & 2 18"	36"	42"	FLARED END SECTIONS FOR R.C. PIPE CULVERTS 18"	24"	36"	42"	48"	DROP INLETS TYPE C	E	MO	ST	SPECIAL	EXT. 4'	8'	JUNCT. BOXES (TYPE E)	YARD DRAINS	SOLID SODDING	WATER	STD. DWG. NOS.
		LIN. FT.														EACH					EACH									SQ.YD.	M.GAL.	
101+10	CONSTRUCT DROP INLET ON LT.																						1									FPC-9E, FPC-9M
102+61	CONSTRUCT TYPE SPECIAL DROP INLET ON LT.																								1							SPECIAL DETAILS
102+98	CONSTRUCT TYPE SPECIAL DROP INLET ON RT.																								1	1						SPECIAL DETAILS
103+14	EXTEND PIPE CULVERT ON RT.			8														1												17	0.21	FES-1, FES-2, PCC-1
103+85	CONSTRUCT TYPE SPECIAL DROP INLET ON LT.																								1	1						SPECIAL DETAILS
103+85	CONSTRUCT TYPE SPECIAL DROP INLET ON RT.																								1	1						SPECIAL DETAILS
106+00	CONSTRUCT TYPE SPECIAL DROP INLET ON RT.																								1		1					SPECIAL DETAILS
107+00	CONSTRUCT TYPE SPECIAL DROP INLET ON LT.																								1		1					SPECIAL DETAILS
110+00	CONSTRUCT TYPE SPECIAL DROP INLET ON LT.																								1	1						SPECIAL DETAILS
110+61	CONSTRUCT DROP INLET ON RT.	20														1						1								5	0.06	FES-1, FES-2, FPC-9, PCC-1
113+25	CONSTRUCT TYPE SPECIAL DROP INLET ON LT.																								1	1						SPECIAL DETAILS
114+60	CONSTRUCT TYPE SPECIAL DROP INLET ON LT.																								1	1						SPECIAL DETAILS
116+00	CONSTRUCT TYPE SPECIAL DROP INLET ON LT.																								1	1						SPECIAL DETAILS
117+55	CONSTRUCT TYPE SPECIAL DROP INLET ON LT.																								1	1						SPECIAL DETAILS
118+55	CONSTRUCT DROP INLET ON LT.						45									1							1				1			5	0.06	FES-1, FES-2, FPC-9E, FPC-9M, PCC-1
118+85	CONSTRUCT JUNCTION BOX ON LT.												25															1				FPC-9, PCC-1,PCM-1
118+92	CONSTRUCT DROP INLET ON LT.												61										1				1					FPC-9E, FPC-9M, PCC-1,PCM-1
118+98	CONSTRUCT DROP INLET ON RT.								52							1							1				1			5	0.06	FES-1, FES-2, FPC-9E, FPC-9M, PCC-1
119+00	CONSTRUCT DROP INLET ON LT.												37										1			1						FPC-9E, FPC-9M, PCC-1,PCM-1
119+80	CONSTRUCT DROP INLET ON RT.												40										1									FPC-9E, FPC-9M, PCC-1,PCM-1
119+95	CONSTRUCT DROP INLET ON LT.												47								1					1						FPC-9E, PCC-1,PCM-1
119+95	CONSTRUCT DROP INLET ON LT.												14										1			2						FPC-9E, FPC-9M, PCC-1,PCM-1
120+08	CONSTRUCT DROP INLET ON RT.												26										1									FPC-9E, FPC-9M, PCC-1,PCM-1
120+85	CONSTRUCT DROP INLET ON LT.												86										1			1						FPC-9E, FPC-9M, PCC-1,PCM-1
120+85	CONSTRUCT DROP INLET ON RT.												73										1									FPC-9E, FPC-9M, PCC-1,PCM-1
201+21	CONSTRUCT DROP INLET ON RT.												99										1									FPC-9E, FPC-9M, PCC-1,PCM-1
201+46	CONSTRUCT DROP INLET ON LT.													82									1									FPC-9E, FPC-9M, PCC-1,PCM-1
202+15	CONSTRUCT DROP INLET ON RT.												90										1									FPC-9E, FPC-9M, PCC-1,PCM-1
203+52	CONSTRUCT DROP INLET ON LT.	7												201		1							1							5	0.06	FES-1, FES-2, FPC-9E, FPC-9M, PCC-1,PCM-1
203+55	CONSTRUCT TYPE SPECIAL DROP INLET ON RT.																								1							SPECIAL DETAILS
204+24	CONSTRUCT TYPE SPECIAL DROP INLET ON RT.																								1	2						SPECIAL DETAILS
205+50	CONSTRUCT TYPE SPECIAL DROP INLET ON LT.																								1	1						SPECIAL DETAILS
206+00	CONSTRUCT TYPE SPECIAL DROP INLET ON RT.																								1	1						SPECIAL DETAILS
207+50	CONSTRUCT TYPE SPECIAL DROP INLET ON LT.																								1	1						SPECIAL DETAILS
208+50	CONSTRUCT TYPE SPECIAL DROP INLET ON RT.																								1	1						SPECIAL DETAILS
210+50	CONSTRUCT TYPE SPECIAL DROP INLET ON LT.																								1	1						SPECIAL DETAILS
214+00	CONSTRUCT TYPE SPECIAL DROP INLET ON LT.																								1	1						SPECIAL DETAILS
217+00	CONSTRUCT TYPE SPECIAL DROP INLET ON LT.																								1		1					SPECIAL DETAILS
217+22	CONSTRUCT PIPE CULVERT		126														2													16	0.20	FES-1, FES-2, PCC-1
217+23	CONSTRUCT TYPE SPECIAL DROP INLET ON RT.																								1	1						SPECIAL DETAILS
219+60	CONSTRUCT PIPE CULVERT							64									2													16	0.20	FES-1, FES-2, PCC-1
219+65	CONSTRUCT TYPE SPECIAL DROP INLET ON LT.																								1							SPECIAL DETAILS
219+80	CONSTRUCT TYPE SPECIAL DROP INLET ON RT.																								1							SPECIAL DETAILS
220+40	CONSTRUCT JUNCTION BOX ON LT.		12					42									1											1		8	0.10	FES-1, FES-2, FPC-9, PCC-1
220+40	CONSTRUCT JUNCTION BOX ON RT.		10														1											1		8	0.10	FES-1, FES-2, FPC-9, PCC-1
220+75	CONSTRUCT DROP INLET ON RT.												32										1									FPC-9E, FPC-9M, PCC-1,PCM-1
221+07	CONSTRUCT DROP INLET ON LT.	30											64			1							1							5	0.06	FES-1, FES-2, FPC-9E, FPC-9M, PCC-1,PCM-1
221+07	CONSTRUCT DROP INLET ON RT.	30											28			1							1							5	0.06	FES-1, FES-2, FPC-9E, FPC-9M, PCC-1,PCM-1
303+15	CONSTRUCT TYPE SPECIAL DROP INLET ON RT.																								1	1						SPECIAL DETAILS
303+35	CONSTRUCT DROP INLET ON LT.			5										85				1					1							17	0.21	FES-1, FES-2, FPC-9E, FPC-9M, PCC-1,PCM-1
304+25	CONSTRUCT DROP INLET ON LT.													85									1									FPC-9E, FPC-9M, PCC-1,PCM-1
304+25	CONSTRUCT TYPE SPECIAL DROP INLET ON RT.																								1	1						SPECIAL DETAILS
305+15	CONSTRUCT DROP INLET ON LT.														84								1									FPC-9E, FPC-9M, PCC-1,PCM-1
305+31	CONSTRUCT DROP INLET ON RT.												3											1								FPC-9S, PCC-1,PCM-1
306+02	CONSTRUCT JUNCTION BOX ON LT.									140																		1				FPC-9, PCC-1
306+34	CONSTRUCT DROP INLET ON RT.												3											1								FPC-9S, PCC-1,PCM-1
306+85	CONSTRUCT DROP INLET ON RT.								69															1								FPC-9S, PCC-1
307+45	CONSTRUCT JUNCTION BOX ON LT.														116													1				FPC-9, PCC-1,PCM-1
307+80	CONSTRUCT DROP INLET ON RT.								23															1								FPC-9S, PCC-1,PCM-1
308+65	CONSTRUCT DROP INLET ON LT.														102								1									FPC-9E, FPC-9M, PCC-1,PCM-1
308+80	CONSTRUCT TYPE SPECIAL DROP INLET ON RT.																								1	1						SPECIAL DETAILS
309+72	CONSTRUCT DROP INLET ON LT.	11									39					1							1							5	0.06	FES-1, FES-2, FPC-9E, FPC-9M, PCC-1
309+72	CONSTRUCT DROP INLET ON RT.					18														1			1								29	0.37	FES-1, FES-2, FPC-9E, FPC-9M, PCC-1
310+40	CONSTRUCT TYPE SPECIAL DROP INLET ON RT.																								1							SPECIAL DETAILS
311+15	CONSTRUCT DROP INLET ON LT.				32										138				1				1							23	0.29	FES-1, FES-2, FPC-9E, FPC-9M, PCC-1,PCM-1
2003+19	EXTEND PIPE CULVERT ON RT.		10														1													8	0.10	FES-1, FES-2, PCC-1
* ENTIRE PROJECT TO BE USED AS DIRECTED BY THE ENGINEER												600																	6			FPC-9, PCM-1
TOTALS:		**98**	**158**	**13**	**32**	**18**	**45**	**106**	**144**	**140**	**39**	**600**	**728**	**453**	**440**	**7**	**7**	**2**	**1**	**1**	**1**	**1**	**24**	**4**	**27**	**25**	**6**	**5**	**6**	**177**	**2.20**	

BASIS OF ESTIMATE:
WATER.....12.6 GAL. / SQ. YD. OF SOLID SODDING

NOTE: FOR R.C. PIPE CULVERT INSTALLATIONS USE TYPE 3 BEDDING UNLESS OTHERWISE SPECIFIED.

NOTE: FOR C.M. PIPE CULVERT INSTALLATIONS USE TYPE 2 BEDDING UNLESS OTHERWISE SPECIFIED.

MM41715 7/24/2023
R061613.DGN

DATE REVISED	DATE REVISED	FED.RD. DIST.NO.	STATE	JOB NO.	SHEET NO.	TOTAL SHEETS
		6	ARK.	061613	55	215
		QUANTITIES				

STATE OF ARKANSAS
LICENSED PROFESSIONAL ENGINEER
No. 11425
TRINITY D. SMITH

Aug 16 2023 3:21 PM

DocuSign

BASE AND SURFACING

STATION	STATION	LOCATION	LENGTH	AGGREGATE BASE COURSE (CLASS 7)		PORTLAND CEMENT CONCRETE BASE		TACK COAT (0.05 GAL. PER SQ. YD.)			TACK COAT (0.17 GAL. PER SQ. YD.)			TACK COAT	ACHM BASE COURSE (1 1/2")					ACHM BINDER COURSE (1")					ACHM SURFACE COURSE (1/2")										
				TON / STATION	TON	AVG. WID.	5" U.T.	TOTAL WID.	SQ.YD.	GALLON	TOTAL WID.	SQ.YD.	GALLON	TOTAL GALLONS	AVG. WID.	SQ.YD.	POUND / SQ.YD.	PG 64-22	PG 76-22	AVG. WID.	SQ.YD.	POUND / SQ.YD.	PG 64-22	PG 76-22	AVG. WID.	SQ.YD.	POUND / SQ.YD.	PG 76-22	AVG. WID.	SQ.YD.	POUND / SQ.YD.	PG 64-22	PG 76-22	TOTAL PG 64-22	TOTAL PG 76-22
			FEET			FEET	SQ. YD.	FEET			FEET				FEET			TON	TON	FEET			TON	TON	FEET			TON	FEET			TON	TON	TON	TON
MAIN LANES																																			
101+00.00	102+00.00	HWY. 31 TRANSITION	100.00			VAR.	118.79	VAR.	32.86	1.64	VAR.	532.39	90.51	92.15															VAR.	532.39	220.00		58.56		58.56
102+00.00	107+75.08	HWY. 31 NOTCH & WIDENING	575.08			VAR.	115.24	VAR.	2473.53	123.68				123.68	VAR.	883.35	550.00	242.92		VAR.	771.95	330.00	127.37		VAR.	771.95	220.00	84.91	VAR.	2389.24	220.00		262.82		347.73
107+75.08	109+36.38	HWY. 31 FULL DEPTH	161.30					113.00	2025.21	101.26				101.26	41.00	734.81	550.00	202.07		36.00	645.20	330.00	106.46		36.00	645.20	220.00	70.97	36.00	645.20	220.00		70.97		141.94
109+36.38	110+16.22	HWY. 31 FULL DEPTH (TAPER)	79.84					117.50	1042.36	52.12				52.12	42.50	377.02	550.00	103.68		37.50	332.67	330.00	54.89		37.50	332.67	220.00	36.59	37.50	332.67	220.00		36.59		73.18
113+21.08	114+00.74	HWY. 31 FULL DEPTH (TAPER)	79.66					117.50	1040.01	52.00				52.00	42.50	376.17	550.00	103.45		37.50	331.92	330.00	54.77		37.50	331.92	220.00	36.51	37.50	331.92	220.00		36.51		73.02
114+00.74	116+73.01	HWY. 31 FULL DEPTH	272.27					113.00	3418.50	170.93				170.93	41.00	1240.34	550.00	341.09		36.00	1089.08	330.00	179.70		36.00	1089.08	220.00	119.80	36.00	1089.08	220.00		119.80		239.60
116+73.01	119+07.91	HWY. 31 NOTCH & WIDENING	234.90			VAR.	332.69	VAR.	2091.88	104.59				104.59	VAR.	764.14	550.00	210.14		VAR.	634.64	330.00	104.72		VAR.	634.64	220.00	69.81	VAR.	1969.35	220.00		216.63		286.44
119+47.09	121+18.00	DEE. DEE. LN. NOTCH AND WIDENING	170.91			VAR.	118.78	VAR.	628.08	31.40				31.40	VAR.	231.47	550.00	63.65		VAR.	184.31	330.00	30.41		VAR.	184.31	220.00	20.27	VAR.	1058.66	220.00		116.45		136.72
121+18.00	122+18.00	DEE. DEE. LN. TRANSITION	100.00			VAR.	16.04				34.00	377.78	64.22	64.22															34.00	377.78	220.00		41.56		41.56
201+00.00	202+00.00	HWY. 13 TRANSITION	100.00			5.00	55.56				36.00	400.00	68.00	68.00															36.00	400.00	220.00		44.00		44.00
202+00.00	208+35.48	HWY. 13 NOTCH, WIDEN, AND OVERLAY	635.48			VAR.	176.53	VAR.	2041.51	102.08				102.08	VAR.	724.61	550.00	199.27		VAR.	658.45	330.00	108.64		VAR.	658.45	220.00	72.43	VAR.	2171.89	220.00		238.91		311.34
208+35.48	208+75.00	HWY. 13 FULL DEPTH (TAPER)	39.52					92.09	404.38	20.22				20.22	34.03	149.43	550.00	41.09		29.03	127.47	330.00	21.03		29.03	127.47	220.00	14.02	29.03	127.47	220.00		14.02		28.04
208+75.00	210+73.26	HWY. 13 FULL DEPTH	198.26					89.00	1960.57	98.03				98.03	33.00	726.95	550.00	199.91		28.00	616.81	330.00	101.77		28.00	616.81	220.00	67.85	28.00	616.81	220.00		67.85		135.70
213+76.20	216+85.18	HWY. 13 FULL DEPTH	308.98					89.00	3055.47	152.77				152.77	33.00	1132.93	550.00	311.56		28.00	961.27	330.00	158.61		28.00	961.27	220.00	105.74	28.00	961.27	220.00		105.74		211.48
216+85.18	218+50.00	HWY. 13 NOTCH, WIDEN, AND OVERLAY	164.82			VAR.	45.78	VAR.	1049.55	52.48				52.48	VAR.	380.37	550.00	104.60		VAR.	334.59	330.00	55.21		VAR.	334.59	220.00	36.80	28.00	512.77	220.00		56.40		93.20
218+50.00	219+90.00	HWY. 13 FULL DEPTH	140.00				13.25	VAR.	1316.66	65.83				65.83	VAR.	448.06	550.00	123.22		VAR.	434.30	330.00	71.66		VAR.	434.30	220.00	47.77	VAR.	434.30	220.00		47.77		95.54
219+90.00	221+20.00	HWY. 13 NOTCH, WIDEN, AND OVERLAY	130.00			VAR.	231.11	VAR.	95.88	4.79				4.79															VAR.	435.33	220.00		47.89		47.89
221+20.00	222+20.00	HWY. 13 TRANSITION	100.00	VAR.	42.91	VAR.	93.29	VAR.	46.64	2.33	20.00	222.22	37.78	40.11															VAR.	319.44	220.00		35.14		35.14
302+15.00	303+15.00	BROWNSVILLE LOOP TRANSITION	100.00			VAR.	31.20	VAR.	135.38	6.77	VAR.	415.74	70.68	77.45	VAR.	52.90	550.00	14.55		VAR.	35.97	330.00	5.94		VAR.	35.97	220.00	3.96	VAR.	472.80	220.00		52.01		55.97
303+15.00	311+25.00	BROWNSVILLE LOOP NOTCH, WIDEN, & OVLY	810.00			VAR.	351.91	VAR.	1314.52	65.73				65.73	VAR.	505.97	550.00	139.14		VAR.	361.22	330.00	59.60		VAR.	361.22	220.00	39.73	VAR.	3329.56	220.00		366.25		405.98
311+25.00	312+25.00	BROWNSVILLE LOOP TRANSITION	100.00	VAR.	9.78						36.00	400.00	68.00	68.00															VAR.	412.86	220.00		45.41		45.41
1001+03.94	1007+23.95	I-40 E.B.L. LT. GUARDRAIL WIDENING	620.01	33.75	209.25																								VAR.	544.50	220.00	59.90		59.90	
1004+24.99	1010+11.04	I-40 W.B.L. RT.GUARDRAIL WIDENING	586.05	28.25	165.56																								VAR.	458.35	220.00	50.42		50.42	
2001+21.60	2007+07.60	I-40 E.B.L. LT. GUARDRAIL WIDENING	586.00	28.25	165.55																								VAR.	458.35	220.00	50.42		50.42	
2003+90.57	2010+10.58	I-40 W.B.L. RT. GUARDRAIL WIDENING	620.01	33.75	209.25																								VAR.	544.50	220.00	59.90		59.90	
ADDITIONAL FOR RAMP TURNOUTS																																			
101+95.00	103+83.00	HWY. 31 - I-40 E.B. EXIT RAMP TURNOUT	188.00					VAR.	1976.07	98.80				98.80	VAR.	698.73	550.00		192.15	VAR.	636.67	330.00		105.38	VAR.	638.67	220.00	70.25	VAR.	638.67	220.00		70.25		140.50
102+11.00	103+73.00	HWY. 31 - I-40 E.B. ENTRANCE RAMP TURNOUT	162.00					VAR.	1145.21	57.26				57.26	VAR.	421.19	550.00		115.83	VAR.	362.01	330.00		59.73	VAR.	362.01	220.00	39.82	VAR.	362.01	220.00		39.82		79.64
202+59.00	205+97.00	HWY. 13 - I-40 E.B. ENTRANCE/EXIT RAMP	338.00					VAR.	5359.57	267.98				267.98	VAR.	1874.31	550.00		515.44	VAR.	1742.63	330.00		287.53	VAR.	1742.63	220.00	191.69	VAR.	1742.63	220.00		191.69		383.38
218+98.00	220+57.00	HWY. 13 - I-40 W.B. ENTRANCE RAMP	159.00					VAR.	1704.17	85.21				85.21	VAR.	623.07	550.00		171.34	VAR.	540.55	330.00		89.19	VAR.	540.55	220.00	59.46	VAR.	540.55	220.00		59.46		118.92
219+00.00	220+42.00	HWY. 13 - I-40 W.B. EXIT RAMP	142.00					VAR.	1047.80	52.39				52.39	VAR.	380.00	550.00		104.50	VAR.	333.90	330.00		55.09	VAR.	333.90	220.00	36.73	VAR.	333.90	220.00		36.73		73.46
ADDITIONAL FOR LEVELING																																			
102+00.00	107+75.08	HWY.31	575.08					VAR.	4203.10	210.16	VAR.	2101.55	357.26	567.42															VAR.	2101.55	VAR.		577.93		577.93
116+73.01	119+07.91	HWY. 31	234.90					VAR.	6865.71	343.29	VAR.	2288.57	389.06	732.35						VAR.	2283.57	VAR.	755.23		VAR.	2288.57	220.00	251.74							
119+47.09	121+18.00	DEE DEE LN.	170.91					VAR.	818.36	40.92	VAR.	818.36	139.12	180.04															VAR.	818.36	VAR.		180.04		180.04
202+00.00	208+35.48	HWY. 13	635.48					VAR.	4951.44	247.57	VAR.	2475.72	420.87	668.44															VAR.	2475.72	VAR.		680.82		680.82
216+85.18	218+50.00	HWY. 13	164.82					40.00	732.53	36.63	20.00	366.27	62.27	98.90															20.00	366.27	VAR.		120.87		120.87
219+90.00	221+20.00	HWY. 13	130.00					VAR.	678.90	33.95	VAR.	339.45	57.71	91.66															VAR.	339.45	VAR.		130.69		130.69
303+15.00	311+25.00	BROWNSVILLE LOOP	810.00					VAR.	5764.46	288.22	VAR.	2882.23	489.98	778.20															VAR.	2882.23	VAR.		951.14		951.14
ADDITIONAL FOR METHOD OF RAISING GRADE																																			
218+50.00	219+90.00	HWY. 13	140.00					VAR.	911.28	45.56	VAR.	911.28	154.92	200.48	VAR.	911.28	VAR.	350.84																	
TOTALS:					**802.30**		**1703.17**		**60331.59**	**3016.59**		**14531.56**	**2470.38**	**5486.97**		**13637.10**		**2751.18**	**1099.26**		**13426.18**		**1996.01**	**596.92**		**13426.18**		**1476.85**		**33527.83**		**220.64**	**5120.72**	**220.64**	**6345.83**

BASIS OF ESTIMATE:
ACHM SURFACE COURSE (1/2").....94.8% MIN. AGGR.....5.2% ASPHALT BINDER
ACHM BINDER COURSE (1").....95.9% MIN. AGGR.....4.1% ASPHALT BINDER
ACHM BASE COURSE (1 1/2").....96.2% MIN. AGGR.....3.8% ASPHALT BINDER
MAXIMUM NUMBER OF GYRATIONS = 115 FOR PG 64-22
MAXIMUM NUMBER OF GYRATIONS = 205 FOR PG 76-22
TACK COAT QUANTITIES WERE CALCULATED USING THE EMULSIFIED ASPHALT RATES. REFER TO SS-400-1 FOR THE RESIDUAL ASPHALT APPLICATION RATES.

DATE REVISED	DATE FILMED	DATE REVISED	DATE FILMED	FED. ROAD DIST. NO.	STATE	FED. AID PROJ. NO.	SHEET NO.	TOTAL SHEETS
				6	ARK.			
				JOB NO.		061613	56	215
				(1) 07605, 07606		QUANTITIES		65923

SCHEDULE OF BRIDGE QUANTITIES - JOB NO. 061613

BRIDGE NO.	NAME PLATE TITLE	UNIT OF STRUCTURE / ITEM NO.	205	801	SP, SS & 802	SP, SS & 802	SP & 803	SS & 804	SS & 804	SS & 805	SS & 806	SS & 806	SS & 806	SP, SS & 807	SS & 807	SS & 808	SS & 809	812	SS & 816	SP JOB 061613	SP JOB 061613	SP JOB 061613
		ITEM	REMOVAL OF EXISTING BRIDGE STRUCTURE (SITE NO. _)	UNCLASSIFIED EXCAVATION FOR STRUCTURES - BRIDGE	CLASS S CONCRETE - BRIDGE	CLASS S(AE) CONCRETE - BRIDGE	CLASS 2 PROTECTIVE SURFACE TREATMENT	REINFORCING STEEL - BRIDGE (GRADE 60)	EPOXY COATED REINFORCING STEEL (GRADE 60)	STEEL SHELL PILING (18" DIA.) (1)	METAL BRIDGE RAILING (TYPE H2)	METAL BRIDGE RAILING (TYPE H3)	TRANSITIONAL APPROACH RAILING	STRUCTURAL STEEL IN PLATE GIRDER SPANS (A709, GR. 50)	PAINTING STRUCTURAL STEEL	ELASTOMERIC BEARINGS	SILICONE JOINT SEALANT	BRIDGE NAME PLATE (TYPE D)	CONCRETE RIPRAP	ARCHITECTURAL FINISH	TEXTURED COATING FINISH	SHORING (SITE NO. _)
		UNIT	LUMP SUM	CU. YD.	CU. YD.	CU. YD.	SQ. YD.	LB.	LB.	LIN. FT.	LIN. FT.	LIN. FT.	EACH	LB.	TON	CU. IN.	LIN. FT.	EACH	CU. YD.	SQ. FT.	SQ. YD.	LUMP SUM
07605	HIGHWAY 31 OVER INTERSTATE 40	BENT NO. 1			75.14	3.00	7.1	10,179	944	682			2	1,203		3,360.0	66		30	56	39	
		BENT NO. 2		337	349.07			57,652		1,161						5,376.0				416	161	
		BENT NO. 3			75.09	3.00	7.1	10,179	944	682			2	1,203		3,360.0	66		34	56	39	
		220'-0" CONTINUOUS PLATE GIRDER UNIT				457.60	1,726.4		114,182		218	444		418,764	207.6			1		935	322	
		SITE NO. 1 (EXISTING BRIDGE NO. 03228)	1																			1
		SUBTOTAL (F.A.P. BFP-0043 (37))		301	446.37	414.46	1,556.1	69,741	103,767	2,257	218	222	4	376,526	185.6	10,813.8	118	1	64	1,359	536	
		SUBTOTAL (F.A.P. TAPU-0043 (37))		36	52.93	49.14	184.5	8,269	12,303	268		222		44,644	22.0	1,282.2	14			104	25	
		TOTALS FOR BRIDGE NO. 07605		337	499.30	463.60	1,740.6	78,010	116,070	2,525	218	444	4	421,170	207.6	12,096.0	132	1	64	1,463	561	
07606	HIGHWAY 13 OVER INTERSTATE 40	BENT NO. 1			55.63	3.12	16.4	8,051	764	711			2	1,159		2,880.0	46		27	56	31	
		BENT NO. 2		244	247.80			44,648		1,536						4,212.0				299	118	
		BENT NO. 3			55.67	3.14	16.4	8,051	764	711			2	1,159		2,880.0	46		28	56	31	
		225'-0" CONTINUOUS PLATE GIRDER UNIT				396.94	1,257.6		93,952		450			364,542	180.4			1		954	326	
		SITE NO. 2 (EXISTING BRIDGE NO. 03655)	1																			1
		TOTALS FOR BRIDGE NO. 07606		244	359.10	403.20	1,290.4	60,750	95,480	2,958	450		4	366,860	180.4	9,972.0	92	1	55	1,365	506	
		TOTAL (F.A.P. BFP-0043 (37))		545	805.47	817.66	2,846.5	130,491	199,247	5,215	668	222	8	743,386	366.0	20,785.8	210	2	119	2,724	1,042	
		TOTAL (F.A.P. TAPU-0043 (37))		36	52.93	49.14	184.5	8,269	12,303	268		222		44,644	22.0	1,282.2	14			104	25	
		TOTALS FOR JOB NO. 061613		581	858.40	866.80	3,031.0	138,760	211,550	5,483	668	444	8	788,030	388.0	22,068.0	224	2	119	2,828	1,067	

(1) Steel shell piles shall conform to ASTM A252, Grade 36, Fy = 45 ksi.

STATE OF ARKANSAS
LICENSED PROFESSIONAL ENGINEER
No.14498
ADAM B. HALL

DIGITALLY SIGNED 8/14/2023
BRIDGE ENGINEER

SCHEDULE OF BRIDGE QUANTITIES
I-40 STRS. & APPRS. (HWYS. 13 & 31)
(CARLISLE & LONOKE) (S)
CARLISLE & LONOKE COUNTIES

ROUTE 31 & 13 SEC. 3 & 10

ARKANSAS STATE HIGHWAY COMMISSION

LITTLE ROCK, ARK.

DRAWN BY: RAK DATE: DEC. 2022 FILENAME: b061613_q1.dgn
CHECKED BY: CSW DATE: JAN. 2023 SCALE: No Scale
DESIGNED BY: RAK DATE: DEC. 2022
BRIDGE NO. 07605, 07606 DRAWING NO. 65923

abhall 8/14/2023 10:49:14 AM
WORKSPACE: ARDOT Bridge (2019)
L:\2021\21T01028 - ARDOT 061613 I-40 Strs and Apprs\Drawings\b061613x1_S001_QT.dgn
REVISED DATE:

SUMMARY OF QUANTITIES (BOX 1 OF 2)

ITEM NUMBER	ITEM	FAP BFP-0043(37)	FAP TAPU-0043(37)	TOTAL	UNIT
201	CLEARING	8		8	STATION
201	GRUBBING	8		8	STATION
202	REMOVAL AND DISPOSAL OF CURB AND GUTTER	1792		1792	LIN. FT.
202	REMOVAL AND DISPOSAL OF FENCE	228		228	LIN. FT.
202	REMOVAL AND DISPOSAL OF CONCRETE PAVEMENT	2024		2024	SQ. YD.
202	REMOVAL AND DISPOSAL OF CONCRETE ISLANDS	72		72	SQ. YD.
202	REMOVAL AND DISPOSAL OF CONCRETE DRIVEWAYS	751		751	SQ. YD.
202	REMOVAL AND DISPOSAL OF WALKS	249		249	SQ. YD.
202	REMOVAL AND DISPOSAL OF DROP INLETS	5		5	EACH
202	REMOVAL AND DISPOSAL OF PIPE CULVERTS	18		18	EACH
202	REMOVAL AND DISPOSAL OF CONCRETE DITCH PAVING	176		176	SQ. YD.
SP & 202	REMOVAL AND DISPOSAL OF WIRE ROPE SAFETY FENCE	549		549	LIN. FT.
202	REMOVAL AND DISPOSAL OF GUARDRAIL	3722		3722	LIN. FT.
202	REMOVAL AND DISPOSAL OF CONCRETE PIER PROTECTION	362		362	LIN. FT.
SP & 202	REMOVAL AND DISPOSAL OF LUMINAIRE POLE AND FOUNDATION	10		10	EACH
SP & 202	REMOVAL AND DISPOSAL OF CONCRETE PULL BOX	17		17	EACH
SP, SS, & 210	UNCLASSIFIED EXCAVATION	51030	160	51190	CU. YD.
SP	SELECT GRANULAR BACKFILL	10923	141	11064	CU. YD.
SP & 210	COMPACTED EMBANKMENT	72213	7420	79633	CU. YD.
SP & 210	SOIL STABILIZATION	400		400	TON
SP, SS, & 303	AGGREGATE BASE COURSE (CLASS 7)	7803	32	7835	TON
SP, SS, & 309	PORTLAND CEMENT CONCRETE BASE (5" UNIFORM THICKNESS)	1703		1703	SQ. YD.
SS & 401	TACK COAT	5527		5527	GAL.
SP, SS, & 405	MINERAL AGGREGATE IN ACHM BASE COURSE (1 1/2")	3704		3704	TON
SP, SS, & 405	ASPHALT BINDER (PG 64-22) IN ACHM BASE COURSE (1 1/2")	105		105	TON
SP, SS, & 405	ASPHALT BINDER (PG 76-22) IN ACHM BASE COURSE (1 1/2")	42		42	TON
SP, SS, & 406	MINERAL AGGREGATE IN ACHM BINDER COURSE (1")	2487		2487	TON
SP, SS, & 406	ASPHALT BINDER (PG 64-22) IN ACHM BINDER COURSE (1")	82		82	TON
SP, SS, & 406	ASPHALT BINDER (PG 76-22) IN ACHM BINDER COURSE (1")	24		24	TON
SP, SS, & 407	MINERAL AGGREGATE IN ACHM SURFACE COURSE (1/2")	6276		6276	TON
SP, SS, & 407	ASPHALT BINDER (PG 64-22) IN ACHM SURFACE COURSE (1/2")	14		14	TON
SP, SS, & 407	ASPHALT BINDER (PG 76-22) IN ACHM SURFACE COURSE (1/2")	330		330	TON
SP & 412	COLD MILLING ASPHALT PAVEMENT	2356		2356	SQ. YD.
SP, SS, & 414	ASPHALT CONCRETE PATCHING FOR MAINTENANCE OF TRAFFIC	20		20	TON
SP, SS, & 415	ACHM PATCHING OF EXISTING ROADWAY	20		20	TON
SP, SS, & 504	APPROACH SLABS	329.81		329.81	CU. YD.
SP, SS, & 505	PORTLAND CEMENT CONCRETE DRIVEWAY	1021.75		1021.75	SQ. YD.
601	MOBILIZATION	1.00		1.00	LUMP SUM
SP & 602	FURNISHING FIELD OFFICE	1		1	EACH
602	FURNISHING FIELD LABORATORY	1		1	EACH
SP, SS, & 603	MAINTENANCE OF TRAFFIC	1.00		1	LUMP SUM
SS & 604	SIGNS	2402		2402	SQ. FT.
SP, SS, & 604	CONSTRUCTION PROJECT INFORMATION SIGN UPDATE	10		10	EACH
SS & 604	BARRICADES	128		128	LIN. FT.
SS & 604	TRAFFIC DRUMS	213		213	EACH
SS & 604	TRAFFIC CONE	60		60	EACH
SS & 604	FURNISHING AND INSTALLING PRECAST CONCRETE BARRIER	5638		5638	LIN. FT.
604	CONSTRUCTION PAVEMENT MARKINGS	11680		11680	LIN. FT.
604	REMOVABLE CONSTRUCTION PAVEMENT MARKINGS	1191		1191	LIN. FT.
SS & 604	ADVANCE WARNING ARROW PANEL	48		48	DAY
SP, SS, & 604	PORTABLE CHANGEABLE MESSAGE SIGN	48		48	WEEK
SS & 604	VERTICAL PANELS	137		137	EACH
SP	MOBILE SPEED NOTIFICATION SYSTEM (SPECIAL)	2		2	EACH
SP, SS, & 605	CONCRETE DITCH PAVING (TYPE B)	962	6	968	SQ. YD.
SS & 606	18" REINFORCED CONCRETE PIPE CULVERTS (CLASS III)	98		98	LIN. FT.
* SS & 606	18" REINFORCED CONCRETE PIPE CULVERTS (CLASS III) (ALTERNATE NO. 1)	728		728	LIN. FT.
* SS & 606	18" SMOOTH LINED POLYMER PRECOATED METALLIC COATED CORRUGATED STEEL PIPE (ALTERNATE NO. 2)	728		728	LIN. FT.
SS & 606	18" REINFORCED CONCRETE PIPE CULVERTS (CLASS IV)	45		45	LIN. FT.
SS & 606	18" REINFORCED CONCRETE PIPE CULVERTS (CLASS V)	144		144	LIN. FT.
SS & 606	24" REINFORCED CONCRETE PIPE CULVERTS (CLASS III)	158		158	LIN. FT.
SS & 606	24" REINFORCED CONCRETE PIPE CULVERTS (CLASS IV)	106		106	LIN. FT.
SS & 606	36" REINFORCED CONCRETE PIPE CULVERTS (CLASS III)	13		13	LIN. FT.
* SS & 606	36" REINFORCED CONCRETE PIPE CULVERTS (CLASS III) (ALTERNATE NO. 1)	453		453	LIN. FT.
* SS & 606	36" SMOOTH LINED POLYMER PRECOATED METALLIC COATED CORRUGATED STEEL PIPE (ALTERNATE NO. 2)	453		453	LIN. FT.
SS & 606	42" REINFORCED CONCRETE PIPE CULVERTS (CLASS III)	32		32	LIN. FT.
* SS & 606	42" REINFORCED CONCRETE PIPE CULVERTS (CLASS III) (ALTERNATE NO. 1)	440		440	LIN. FT.
* SS & 606	42" SMOOTH LINED POLYMER PRECOATED METALLIC COATED CORRUGATED STEEL PIPE (ALTERNATE NO. 2)	440		440	LIN. FT.
SS & 606	42" REINFORCED CONCRETE PIPE CULVERTS (CLASS V)	140		140	LIN. FT.
SS & 606	48" REINFORCED CONCRETE PIPE CULVERTS (CLASS III)	18		18	LIN. FT.
SS & 606	48" REINFORCED CONCRETE PIPE CULVERTS (CLASS V)	39		39	LIN. FT.
SS & 606	12" SIDE DRAIN	600		600	LIN. FT.
SP, SS, & 606	18" SIDE DRAIN	32		32	LIN. FT.
SS & 606	18" FLARED END SECTIONS FOR REINFORCED CONCRETE PIPE CULVERTS	7		7	EACH
SS & 606	24" FLARED END SECTIONS FOR REINFORCED CONCRETE PIPE CULVERTS	7		7	EACH
SS & 606	36" FLARED END SECTIONS FOR REINFORCED CONCRETE PIPE CULVERTS	2		2	EACH
SS & 606	42" FLARED END SECTIONS FOR REINFORCED CONCRETE PIPE CULVERTS	1		1	EACH
SS & 606	48" FLARED END SECTIONS FOR REINFORCED CONCRETE PIPE CULVERTS	1		1	EACH
SP	CULVERT CLEAN OUT	6		6	EACH
SS & 606	SELECTED PIPE BEDDING	250		250	CU. YD.
SS & 609	DROP INLETS (TYPE C)	1		1	EACH
SS & 609	DROP INLETS (TYPE E)	1		1	EACH
SS & 609	DROP INLETS (TYPE MO)	24		24	EACH
SS & 609	DROP INLETS (TYPE ST)	4		4	EACH
SS & 609	DROP INLETS (TYPE SPECIAL)	27		27	EACH
SS & 609	JUNCTION BOXES (TYPE E)	5		5	EACH
SS & 609	DROP INLET EXTENSIONS (4')	25		25	EACH
SS & 609	DROP INLET EXTENSIONS (8')	6		6	EACH
SS & 609	YARD DRAINS	6		6	EACH
SS & 611	4" PIPE UNDERDRAINS	2000		2000	LIN. FT.
SS & 611	UNDERDRAIN OUTLET PROTECTORS	8		8	EACH
SS & 615	PAVEMENT REPAIR OVER CULVERTS (ASPHALT)	188		188	TON
SS & 617	GUARDRAIL (TYPE A)	1800		1800	LIN. FT.
SS & 617	TERMINAL ANCHOR POSTS (TYPE 1)	4		4	EACH
SS & 617	GUARDRAIL TERMINAL (TYPE 2)	4		4	EACH
SP	TEMPORARY TERMINAL ANCHOR FOR WIRE ROPE SAFETY FENCE	4		4	EACH
SP	WIRE ROPE SAFETY FENCE (POST REPAIR)	30		30	EACH
SP	WIRE ROPE SAFETY FENCE - REMOVE AND RECONSTRUCT	702		702	LIN. FT.
SS & 619	WIRE FENCE (TYPE A)	117		117	LIN. FT.
620	LIME	21.10		21.10	TON
620	SEEDING	10.55		10.55	ACRE
SS & 620	MULCH COVER	31.65		31.65	ACRE
620	WATER	1554.0		1554.0	M. GAL.

* DENOTES ALTERNATE BID ITEMS.

SUMMARY OF QUANTITIES AND REVISIONS

STATE OF ARKANSAS LICENSED PROFESSIONAL ENGINEER No. 11485 TIMOTHY D. SMITH

Aug 16 2023 3:21 PM

DATE REVISED	DATE REVISED	FED.RD. DIST.NO.	STATE	JOB NO.	SHEET NO.	TOTAL SHEETS
		6	ARK.	061613	57	215

SUMMARY OF QUANTITIES AND REVISIONS

SUMMARY OF QUANTITIES (BOX 2 OF 2)

ITEM NUMBER	ITEM	FAP BFP-0043(37)	FAP TAPU-0043(37)	TOTAL	UNIT
621	TEMPORARY SEEDING	21.10		21.10	ACRE
621	SILT FENCE	1730		1730	LIN. FT.
621	SEDIMENT REMOVAL AND DISPOSAL	177		177	CU. YD.
621	ROCK DITCH CHECKS	228		228	CU. YD.
SS & 621	FILTER SOCK (12")	1083		1083	LIN. FT.
623	SECOND SEEDING APPLICATION	10.55		10.55	ACRE
624	SOLID SODDING	3757		3757	SQ. YD.
SP, SS, & 632	CONCRETE ISLAND	457		457	SQ. YD.
SP, SS, & 633	CONCRETE WALKS	2781	1124	3905	SQ. YD.
SS & 634	CONCRETE CURB (TYPE D)	62		62	LIN. FT.
SS & 634	CONCRETE COMBINATION CURB AND GUTTER (TYPE A) (1' 6")	9202		9202	LIN. FT.
635	ROADWAY CONSTRUCTION CONTROL	1.00		1.00	LUMP SUM
637	MAILBOXES	2		2	EACH
637	MAILBOX SUPPORTS (SINGLE)	2		2	EACH
SP, SS, & 641	WHEELCHAIR RAMPS (TYPE 2)	24		24	SQ. YD.
SP, SS, & 641	WHEELCHAIR RAMPS (TYPE 3)	93	44	137	SQ. YD.
SP & 701	SYSTEM LOCAL CONTROLLER TS2-TYPE 2 (8 PHASES)	2		2	EACH
SP & 701	SYSTEM LOCAL CONTROLLER-FIBER (8 PHASES)	2		2	EACH
SP	LOCAL RADIO WITH ANTENNA RELOCATION	2		2	EACH
SP	ANTENNA CABLE (TYPE 6)	100		100	LIN. FT.
SP	WIC FIBER ENCLOSURE	2		2	EACH
SP & 706	TRAFFIC SIGNAL HEAD, LED, (3 SECTION, 1 WAY)	34		34	EACH
SP & 706	TRAFFIC SIGNAL HEAD, LED, (4 SECTION, 1 WAY)	7		7	EACH
SP	RELOCATION OF TRAFFIC SIGNAL HEAD	4		4	EACH
SP & 707	CENTRAL CONTROL UNIT	2		2	EACH
SP & 707	POLE MOUNTED ASSEMBLY	14		14	EACH
SP & 707	INFRARED PROGRAMMING DEVICE	2		2	EACH
SP & 707	COUNTDOWN PEDESTRIAN SIGNAL HEAD, LED	14		14	EACH
708	TRAFFIC SIGNAL CABLE (5C/14 A.W.G.)	4837		4837	LIN. FT.
708	TRAFFIC SIGNAL CABLE (7C/14 A.W.G.)	2288		2288	LIN. FT.
708	TRAFFIC SIGNAL CABLE (20C/14 A.W.G.)	932		932	LIN. FT.
SP	ELECTRICAL CONDUCTORS-IN-CONDUIT (1C/8 A.W.G., E.G.C.)	1607		1607	LIN. FT.
SP	ELECTRICAL CONDUCTORS-IN-CONDUIT (1C/12 A.W.G., E.G.C.)	440		440	LIN. FT.
SP	ELECTRICAL CONDUCTORS-IN-CONDUIT (1C/10 A.W.G., E.G.C.)	400		400	LIN. FT.
SP	ELECTRICAL CONDUCTORS-IN-CONDUIT (1C/10 A.W.G.)	800		800	LIN. FT.
SP	ELECTRICAL CONDUCTORS-IN-CONDUIT (2C/6 A.W.G.)	256		256	LIN. FT.
SP	ELECTRICAL CONDUCTORS-IN-CONDUIT (1C/6 A.W.G.)	2400		2400	LIN. FT.
SP	ELECTRICAL CONDUCTORS-IN-CONDUIT (1C/6 A.W.G., E.G.C.)	4800		4800	LIN. FT.
SP	ELECTRICAL CONDUCTORS FOR LUMINAIRES	1672		1672	LIN. FT.
SP	COMMUNICATION CABLE, FIBER (6 CHANNEL)	2000		2000	LIN. FT.
709	GALVANIZED STEEL CONDUIT (2")	100		100	LIN. FT.
709	GALVANIZED STEEL CONDUIT (3")	60		60	LIN. FT.
710	NON-METALLIC CONDUIT (2")	7465		7465	LIN. FT.
710	NON-METALLIC CONDUIT (3")	1057		1057	LIN. FT.
SS & 711	CONCRETE PULL BOX (TYPE 2)	4		4	EACH
SS & 711	CONCRETE PULL BOX (TYPE 3)	7		7	EACH
SS & 711	CONCRETE PULL BOX (TYPE 1 HD)	2		2	EACH
SS & 711	CONCRETE PULL BOX (TYPE 2 HD)	33		33	EACH
SS & 711	CONCRETE PULL BOX (TYPE 3 HD)	10		10	EACH
SS & 713	SPAN WIRE ASSEMBLY	2		2	EACH
SS & 714	TRAFFIC SIGNAL MAST ARM AND POLE WITH FOUNDATION (0')	1		1	EACH
SS & 714	TRAFFIC SIGNAL MAST ARM AND POLE WITH FOUNDATION (26')	1		1	EACH
SS & 714	TRAFFIC SIGNAL MAST ARM AND POLE WITH FOUNDATION (36')	1		1	EACH
SS & 714	TRAFFIC SIGNAL MAST ARM AND POLE WITH FOUNDATION (46')	1		1	EACH
SS & 714	TRAFFIC SIGNAL MAST ARM AND POLE WITH FOUNDATION (50')	1		1	EACH
SS & 714	TRAFFIC SIGNAL MAST ARM AND POLE WITH FOUNDATION (68')	1		1	EACH
SS & 714	TRAFFIC SIGNAL MAST ARM AND POLE WITH FOUNDATION (44'-44')	1		1	EACH
SP	LED LUMINAIRE ASSEMBLY	8		8	EACH
SP	ROADWAY ILLUMINATION POLE (1 x 211W LED LUMINAIRE, BREAKAWAY BASE, 8' ARM, 40')	10		10	EACH
SS & 715	TRAFFIC SIGNAL PEDESTAL POLE WITH FOUNDATION	6		6	EACH
SP	SERVICE POINT ASSEMBLY (2 CIRCUITS)	2		2	EACH
SP	REMOVAL OF TRAFFIC SIGNAL EQUIPMENT	1.00		1.00	LUMP SUM
716	TREATED WOOD POLE (CLASS 2, 45')	8		8	EACH
718	REFLECTORIZED PAINT PAVEMENT MARKING WHITE (10")	1076		1076	LIN. FT.
718	REFLECTORIZED PAINT PAVEMENT MARKING YELLOW (10")	269		269	LIN. FT.
719	THERMOPLASTIC PAVEMENT MARKING WHITE (6")	2251		2251	LIN. FT.
719	THERMOPLASTIC PAVEMENT MARKING WHITE (8")	1646		1646	LIN. FT.
719	THERMOPLASTIC PAVEMENT MARKING WHITE (12")	1270		1270	LIN. FT.
719	THERMOPLASTIC PAVEMENT MARKING YELLOW (6")	11512		11512	LIN. FT.
719	THERMOPLASTIC PAVEMENT MARKING YELLOW (8")	90		90	LIN. FT.
719	THERMOPLASTIC PAVEMENT MARKING (WORDS)	6		6	EACH
719	THERMOPLASTIC PAVEMENT MARKING (ARROWS)	12		12	EACH
SP & 719	THERMOPLASTIC PAVEMENT MARKING (YIELD LINE)	136		136	LIN. FT.
721	RAISED PAVEMENT MARKERS (TYPE II)	85		85	EACH
SP	18" STREET NAME SIGN	6		6	EACH
SS & 731	TEMPORARY IMPACT ATTENUATION BARRIER	2		2	EACH
SS & 731	TEMPORARY IMPACT ATTENUATION BARRIER (REPAIR)	2		2	EACH
SP	VIDEO DETECTOR ROTATION	2		2	EACH
SP & 733	VIDEO DETECTOR (IP)	11		11	EACH
SP & 733	HYBRID VIDEO/RADAR DETECTOR	3		3	EACH
SP & 733	VIDEO CABLE (EXTERIOR CAT 5E)	2998		2998	LIN. FT.
SP & 733	VIDEO MONITOR (CLR)	4		4	EACH
SP & 733	CENTRAL CONTROL UNIT (8 CHANNEL)	4		4	EACH
SP	RETAINING WALL	15191	244	15435	SQ. FT.
SP	TEMPORARY RETAINING WALL	5043		5043	SQ. FT.
SP	TEXTURED COATING FINISH	1492	25	1517	SQ. YD.
SS & 804	REINFORCING STEEL-ROADWAY (GRADE 60)	40754		40754	POUND
SS & 816	FILTER BLANKET	128		128	SQ. YD.
SS & 816	DUMPED RIPRAP	64		64	CU. YD.
	STRUCTURES OVER 20' SPAN				
205	REMOVAL OF EXISTING BRIDGE STRUCTURE (SITE NO. 1)	1.00		1.00	LUMP SUM
205	REMOVAL OF EXISTING BRIDGE STRUCTURE (SITE NO. 2)	1.00		1.00	LUMP SUM
636	BRIDGE CONSTRUCTION CONTROL	1.00		1.00	LUMP SUM
801	UNCLASSIFIED EXCAVATION FOR STRUCTURES-BRIDGE	545	36	581	CU. YD.
SP, SS, & 802	CLASS S CONCRETE-BRIDGE	805.47	52.93	858.40	CU. YD.
SP, SS, & 802	CLASS S(AE) CONCRETE-BRIDGE	817.66	49.14	866.80	CU. YD.
SP	ARCHITECTURAL FINISH	2724	104	2828	SQ. FT.
SP	TEXTURED COATING FINISH	1042	25	1067	SQ. YD.
SP	SHORING (SITE NO. 1)	1.00		1.00	LUMP SUM
SP	SHORING (SITE NO. 2)	1.00		1.00	LUMP SUM
SP & 803	CLASS 2 PROTECTIVE SURFACE TREATMENT	2846.5	184.5	3031.0	SQ. YD.
SS & 804	REINFORCING STEEL-BRIDGE (GRADE 60)	130491	8269	138760	POUND
SS & 804	EPOXY COATED REINFORCING STEEL (GRADE 60)	199247	12303	211550	POUND
SS & 805	STEEL SHELL PILING (18" DIAMETER)	5215	268	5483	LIN. FT.
SS & 806	METAL BRIDGE RAILING (TYPE H2)	668		668	LIN. FT.
SS & 806	METAL BRIDGE RAILING (TYPE H3)	222	222	444	LIN. FT.
SS & 806	TRANSITIONAL APPROACH RAILING	8		8	EACH
SP, SS, & 807	STRUCTURAL STEEL IN PLATE GIRDER SPANS (A709, GR. 50)	743386	44644	788030	POUND
SS & 807	PAINTING STRUCTURAL STEEL	366.0	22.0	388.0	TON
SS & 808	ELASTOMERIC BEARINGS	20785.8	1282.2	22068.0	CU. IN.
SS & 809	SILICONE JOINT SEALANT	210	14	224	LIN. FT.
812	BRIDGE NAME PLATE (TYPE D)	2		2	EACH
SS & 816	CONCRETE RIPRAP	119		119	CU. YD.

REVISIONS

DATE	REVISION	SHEET NUMBER

SUMMARY OF QUANTITIES AND REVISIONS

STATE OF ARKANSAS
LICENSED PROFESSIONAL ENGINEER
No. 11485
THINH T. D. SMITH
Aug 16 2023 3:22 PM

DATE REVISED	DATE REVISED	FED.RD. DIST.NO.	STATE	JOB NO.	SHEET NO.	TOTAL SHEETS
		6	ARK.	061613	58	215

SUMMARY OF QUANTITIES AND REVISIONS

DATE REVISED	DATE REVISED	FED.RD. DIST.NO.	STATE	JOB NO.	SHEET NO.	TOTAL SHEETS
		6	ARK.	061613	59	215
		SURVEY CONTROL DETAILS				

STATE OF ARKANSAS
LICENSED PROFESSIONAL ENGINEER
No. 11425
TRINITY D. SMITH

Aug 16 2023 3:22 PM

DocuSign

Project Name: s061613
Date: 12/19/2019
Coordinate System: ARKANSAS STATE PLANE -SOUTH ZONE BASED ON GPS CONTROL, PROJECTED TO GROUND.
Units: U.S. SURVEY FOOT

Point Name	Northing	Easting	Elev	Feature	Description
1	2089387.0618	1345612.9393	227.169	CTL	*STD ARDOT CAP STAMPED PN: 1
2	2090032.7513	1345748.6132	252.745	CTL	*STD ARDOT CAP STAMPED PN: 2
3	2090302.2571	1345811.6211	252.371	CTL	*STD ARDOT CAP STAMPED PN: 3
4	2090819.3987	1345940.1660	239.168	CTL	*STD ARDOT CAP STAMPED PN: 4
5	2090060.3493	1345036.7317	233.107	CTL	*STD ARDOT CAP STAMPED PN: 5
6	2090083.0123	1345834.9181	233.468	CTL	*STD ARDOT CAP STAMPED PN: 6
7	2090084.0013	1346493.5616	232.605	CTL	*STD ARDOT CAP STAMPED PN: 7
8	2088074.7378	1387190.4786	238.774	CTL	*STD ARDOT CAP STAMPED PN: 8
9	2088713.0393	1387275.6005	258.907	CTL	*STD ARDOT CAP STAMPED PN: 9
10	2089031.2181	1387283.5465	258.533	CTL	*STD ARDOT CAP STAMPED PN: 10
11	2089544.3487	1387242.4635	238.750	CTL	*STD ARDOT CAP STAMPED PN: 11
12	2088743.0173	1386487.1101	243.366	CTL	*STD ARDOT CAP STAMPED PN: 12
13	2088871.3602	1387355.9324	239.214	CTL	*STD ARDOT CAP STAMPED PN: 13
14	2088952.6871	1387983.8340	238.852	CTL	*STD ARDOT CAP STAMPED PN: 14
900	2089334.0008	1345661.9483	227.152	TBM	*CHSLED SQR IN CTR OF
901	2090257.4341	1345798.2432	254.479	TBM	*CHSL SQR IN WR ON NE BR CNR
902	2087998.9199	1387200.6526	236.737	TBM	*CHISLED SQR IN CONC FES OF 18"
903	2088975.0921	1387241.2675	260.904	TBM	*CHISLED SQUARE IN BR CRNR
904	2088003.3519	1387210.8886	239.133	TBM	*ARDOT TBM CAP IN NW CORNER OF CONC SW
999	2104826.9380	1349849.9281	251.151	BM	*NGS BM P 111

*Note - Rebar and Cap - Standard - 5/8" Rebar with 2" Aluminum Cap stamped
*(standard markings common to all caps), or as indicated
(other markings indicated in the point description of the individual point).
USE CAF = 1.0 FOR STAKEOUT FOR THIS PROJECT
A PROJECT CAF OF 1.000000763 HAS BEEN USED TO COMPUTE THE ABOVE GROUND COORDINATES.
THIS CAF IS INTENDED FOR USE WITHIN THE PROJECT LIMITS.
GRID DISTANCE = GROUND DISTANCE X CAF.
GRID COORDINATES ARE STORED UNDER FILE NAME s061613gi.ctl
HORIZONTAL DATUM: NAD 83 (2011)
VERTICAL DATUM: NAVD 88 POSITIONAL ACCURACY THIRD ORDER, UNLESS SPECIFIED OTHERWISE AT A SPECIFIC POINT.

REFERENCE POINTS (1500 SERIES) ARE TO BE USED TO ESTABLISH CONTROL IF THE PRIMARY CONTROL POINTS LISTED ABOVE HAVE BEEN DESTROYED.
REFERENCE POINTS ARE NOT TO BE USED FOR VERTICAL CONTROL

BASIS OF BEARING:
ARKANSAS STATE PLANE GRID BEARINGS - 0301-NORTH ZONE or 0302-SOUTH ZONE
DETERMINED FROM STATIC GPS OBSERVATIONS
CONVERGENCE ANGLE: 00-03-49 RIGHT AT LAT N 34-48-14 LON W091-53-10
GRID AZIMUTH = ASTRONOMICAL AZIMUTH - CONVERGENCE ANGLE.

MID POINT WEST SECTION
LAT N 34-48-16
LON W091-53-18

MID POINT EAST SECTION
LAT N 34-48-01
LON W091-45-00

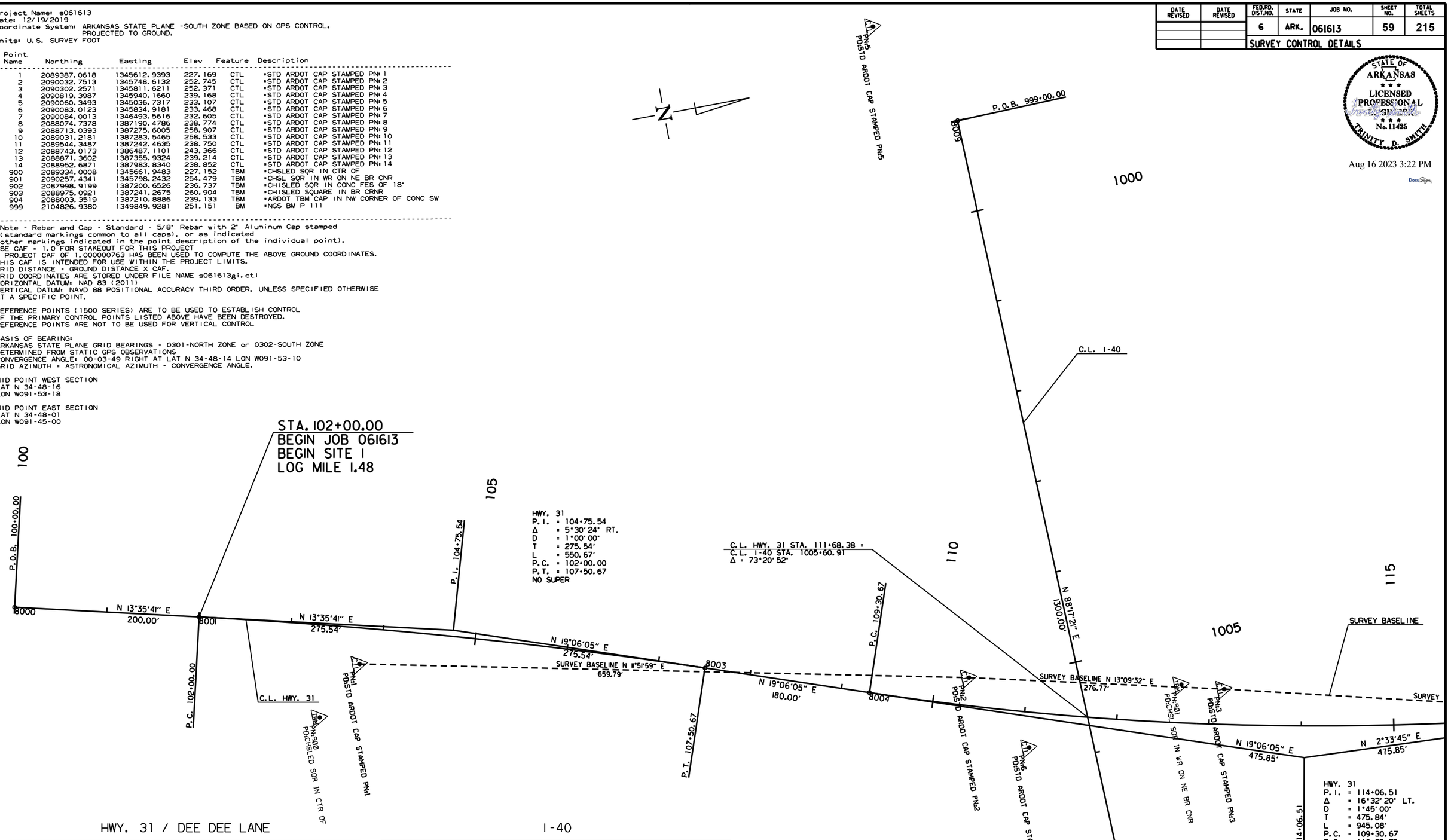

HWY. 31 / DEE DEE LANE

POINT NO.	TYPE	STATION	NORTHING	EASTING
8000	POB	100+00.00	2089031.22	1345483.88
8001	PC	102+00.00	2089225.62	1345530.89
8003	PT	107+50.67	2089753.82	1345685.83
8004	PC	109+30.67	2089923.91	1345744.73
8006	PT	118+75.75	2090848.93	1345921.73
8007	PI	119+33.44	2090906.56	1345924.30
8008	POE	123+00.00	2091273.10	1345928.18

I-40

POINT NO.	TYPE	STATION	NORTHING	EASTING
8009	POB	999+00.00	2090131.43	1345153.69
8010	POE	1012+00.00	2090170.24	1346453.11

SITE 1
SURVEY CONTROL DETAILS

MM41715 7/24/2023
R06161 3.DGN

DATE REVISED	DATE REVISED	FED.RD. DIST.NO.	STATE	JOB NO.	SHEET NO.	TOTAL SHEETS
		6	ARK.	061613	60	215
		SURVEY CONTROL DETAILS				

STATE OF ARKANSAS
LICENSED PROFESSIONAL ENGINEER
No. 11425
TRINITY D. SMITH

Aug 16 2023 3:22 PM

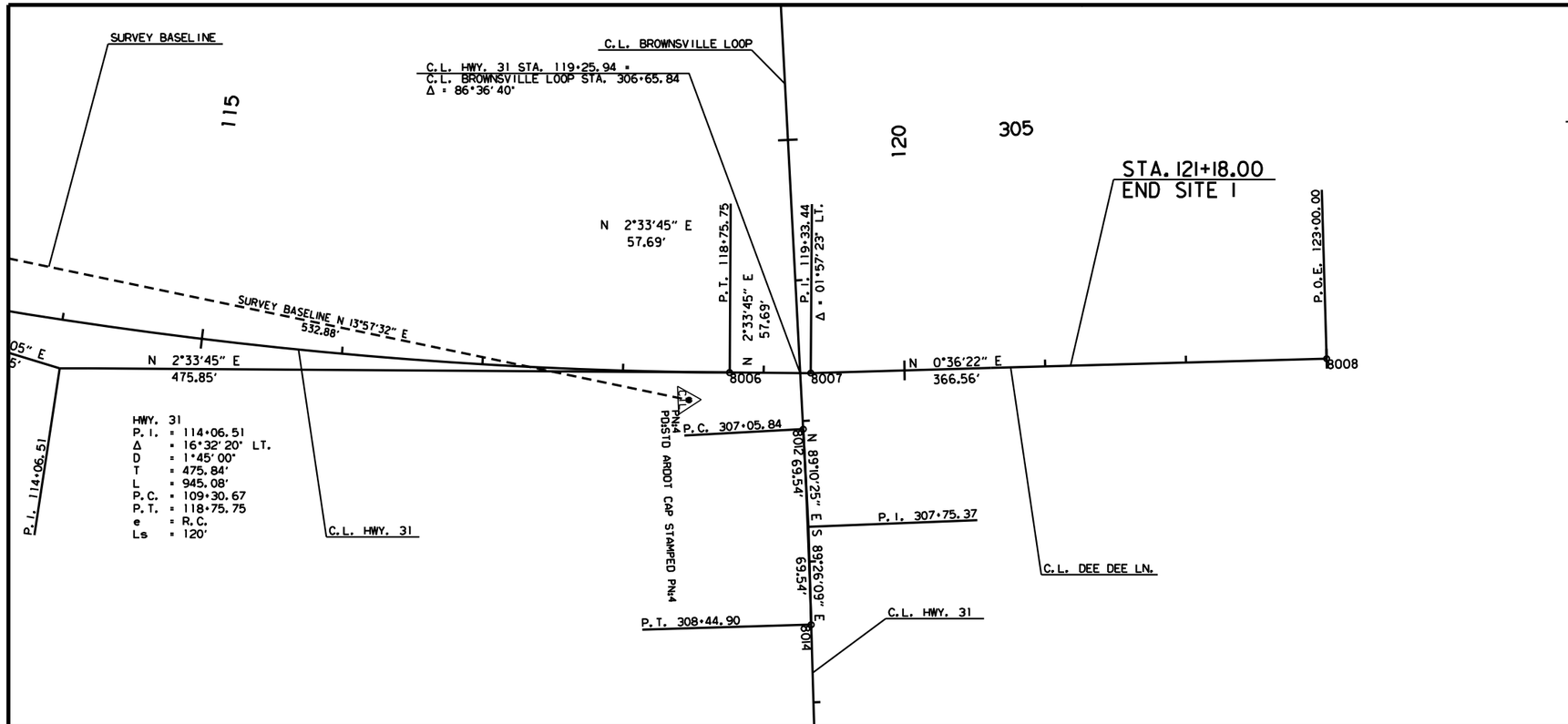

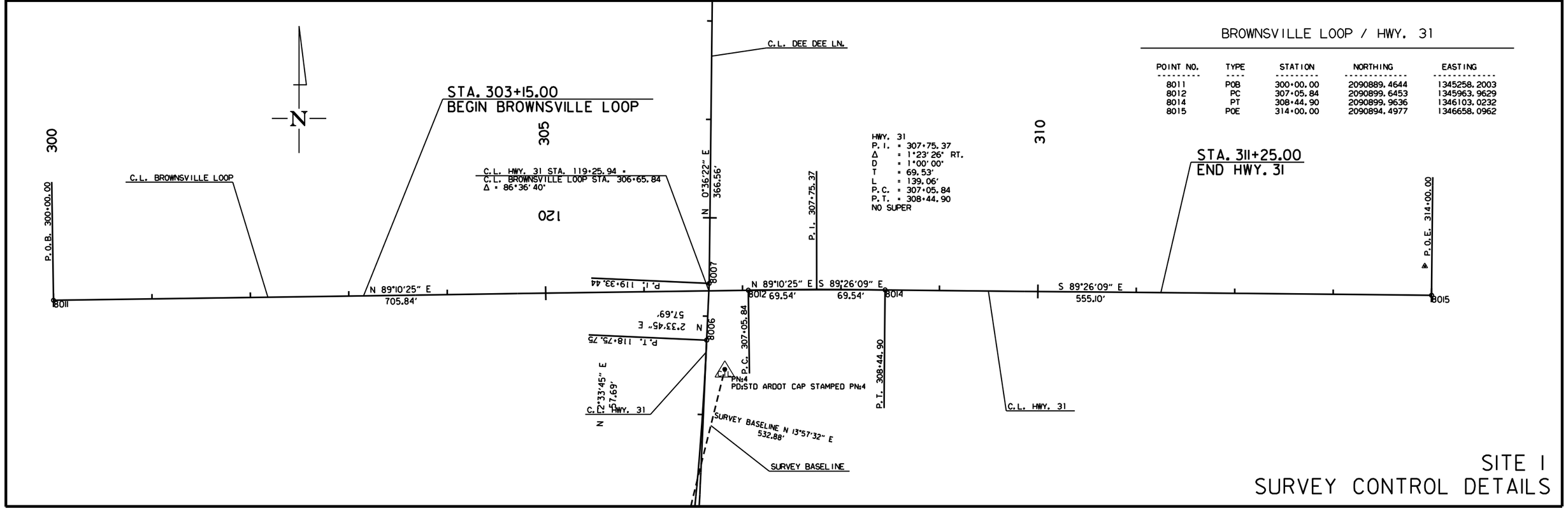

BROWNSVILLE LOOP / HWY. 31

POINT NO.	TYPE	STATION	NORTHING	EASTING
8011	POB	300+00.00	2090889.4644	1345258.2003
8012	PC	307+05.84	2090899.6453	1345963.9629
8014	PT	308+44.90	2090899.9636	1346103.0232
8015	POE	314+00.00	2090894.4977	1346658.0962

SITE 1
SURVEY CONTROL DETAILS

MM41715 7/24/2023
R061613.DGN

DATE REVISED	DATE REVISED	FED.RD. DIST.NO.	STATE	JOB NO.	SHEET NO.	TOTAL SHEETS
		6	ARK.	061613	61	215
		SURVEY CONTROL DETAILS				

STATE OF ARKANSAS
LICENSED PROFESSIONAL ENGINEER
No. 11425
TRINITY D. SMITH

Aug 16 2023 3:22 PM

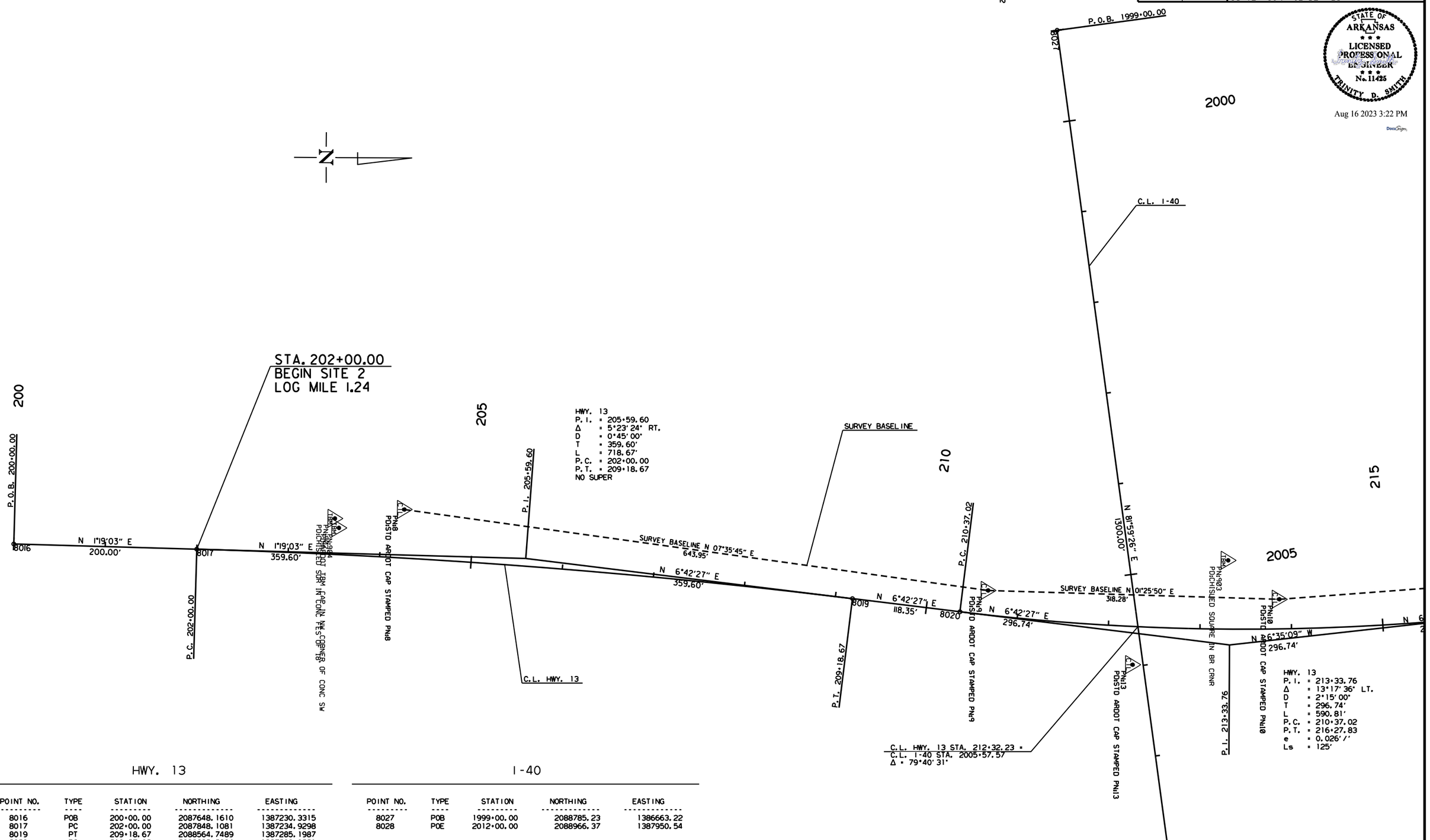

HWY. 13

POINT NO.	TYPE	STATION	NORTHING	EASTING
8016	POB	200+00.00	2087648.1610	1387230.3315
8017	PC	202+00.00	2087848.1081	1387234.9298
8019	PT	209+18.67	2088564.7489	1387285.1987
8020	PC	210+37.02	2088682.2894	1387299.0221
8022	PT	216+27.83	2089271.7824	1387299.6471
8023	PC	216+97.16	2089340.6542	1387291.6955
8025	PT	220+47.16	2089689.9970	1387275.5354
8026	POE	223+00.00	2089942.7771	1387281.2226

I-40

POINT NO.	TYPE	STATION	NORTHING	EASTING
8027	POB	1999+00.00	2088785.23	1386663.22
8028	POE	2012+00.00	2088966.37	1387950.54

SITE 2
SURVEY CONTROL DETAILS

MM41715 7/24/2023
R061613.DGN

DATE REVISED	DATE REVISED	FED.RD. DIST.NO.	STATE	JOB NO.	SHEET NO.	TOTAL SHEETS
		6	ARK.	061613	62	215
		SURVEY CONTROL DETAILS				

STATE OF ARKANSAS
LICENSED PROFESSIONAL ENGINEER
No. 11425
TRINITY D. SMITH

Aug 16 2023 3:22 PM

DocuSign

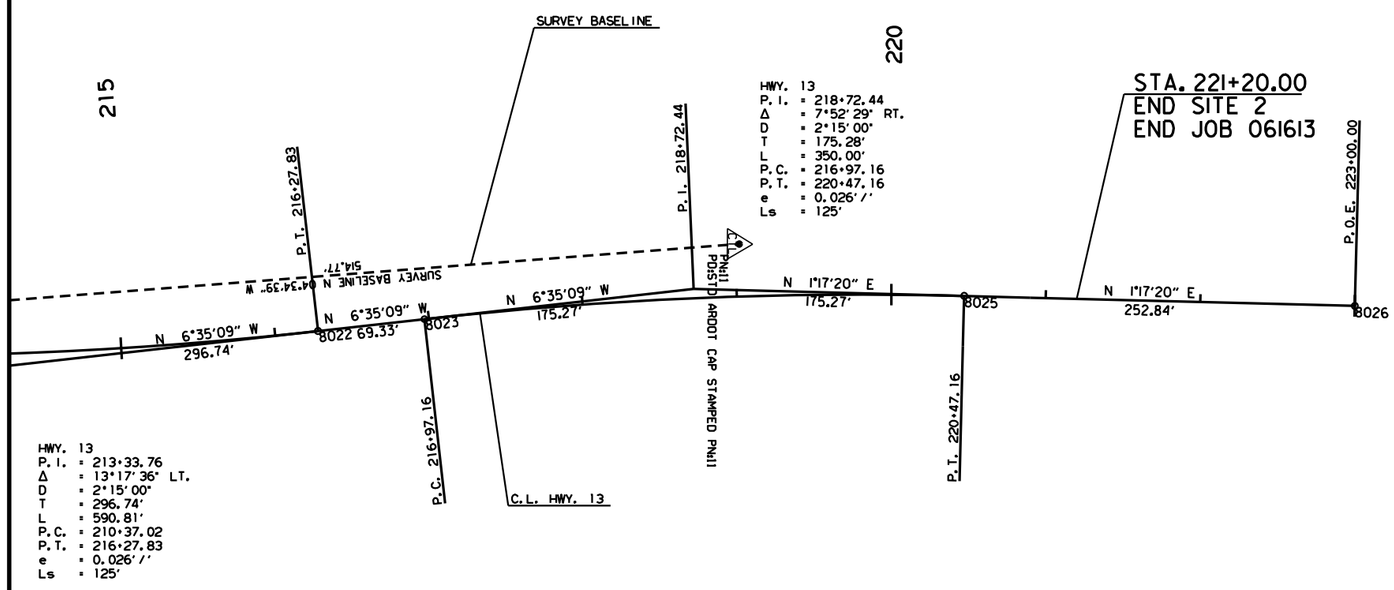

SITE 2
SURVEY CONTROL DETAILS

MM41715 7/24/2023
R061613.DGN

DATE REVISED	DATE REVISED	FED.RD. DIST.NO.	STATE	JOB NO.	SHEET NO.	TOTAL SHEETS
		6	ARK.	061613	63	215
		PLAN AND PROFILE SHEETS				

STATE OF ARKANSAS
LICENSED PROFESSIONAL ENGINEER
No. 11425
TRINITY D. SMITH

Aug 16 2023 3:22 PM

STA. 101+10 IN PLACE
D. I. ON LT.
REMOVE AND CONSTRUCT
D. I. ON LT.
CONNECT TO 12" X 32' EXIST. PIPE
H = 3' 1"
TY C = 4' X 3'
TY MO = 4' I.D.

STA. 101+10 IN PLACE
D. I. ON LT.
& 36" X 90' PIPE INLET
& 12" X 32' PIPE INLET
& 36" X 102' PIPE OUTLET
RETAIN

STA. 103+01 IN PLACE
30" X 83' R.C. PIPE CULVERT
WITH FES LT. AND HDWL RT.
RETAIN

STA. 102+61 CONSTRUCT
D. I. TYPE SPECIAL ON LT.
H = 1' 0"
TYPE SPECIAL D. I. = 4' X 8'

STA. 103+85 CONSTRUCT
D. I. TYPE SPECIAL ON LT. W/ 4' EXTENSION
H = 1' 0"
TYPE SPECIAL D. I. = 4' X 8'

STA. 103+85
CONC. DITCH PAVING (TYPE B) = 1.95 SQ. YD.

STA. 103+52 CONSTRUCT
TYPE 3 WHEELCHAIR RAMP ON LT.
= 5.3 SQ. YDS.

STA. 102+55 CONSTRUCT
TYPE 3 WHEELCHAIR RAMP ON LT.
= 3.3 SQ. YDS.

STA. 103+03 CONSTRUCT
TURNOUT ON LT. = 15 CU. YDS. COMP. EMB.

STA. 101+67 CONSTRUCT
APPROACH ON LT. = 55 CU. YDS. COMP. EMB.

STA. 110+00 CONSTRUCT
D. I. TYPE SPECIAL ON LT. W/ 4' EXTENSION
H = 1' 0"
TYPE SPECIAL D. I. = 4' X 8'

STA. 110+00
CONC. DITCH PAVING (TYPE B) = 34.91 SQ. YD.

STA. 107+00 CONSTRUCT
D. I. TYPE SPECIAL ON LT. W/ 8' EXTENSION
H = 1' 0"
TYPE SPECIAL D. I. = 4' X 8'

STA. 107+00
CONC. DITCH PAVING (TYPE B) = 23.50 SQ. YD.

STA. 113+25 CONSTRUCT
D. I. TYPE SPECIAL ON LT. W/ 4' EXTENSION
H = 1' 0"
TYPE SPECIAL D. I. = 4' X 8'

STA. 113+25
CONC. DITCH PAVING (TYPE B) = 32.17 SQ. YD.

STA. 114+60 CONSTRUCT
D. I. TYPE SPECIAL ON LT. W/ 4' EXTENSION
H = 1' 0"
TYPE SPECIAL D. I. = 4' X 8'

STA. 114+60
CONC. DITCH PAVING (TYPE B) = 25.39 SQ. YD.

REMOVAL & DISPOSAL OF GUARD RAIL
STA. 109+31.74 TO STA. 110+05.42 LT. OF HWY. 31 = 75 LIN. FT.
STA. 109+42.85 TO STA. 110+15.93 RT. OF HWY. 31 = 75 LIN. FT.
STA. 112+87.88 TO STA. 113+62.71 LT. OF HWY. 31 = 75 LIN. FT.
STA. 112+95.52 TO STA. 113+69.55 RT. OF HWY. 31 = 75 LIN. FT.

HWY. 31
P. I. = 114+06.51
Δ = 16°32' 20" LT.
D = 1°45' 00"
T = 475.84'
L = 945.08'
P. C. = 109+30.67
P. T. = 118+75.75
e = R. C.
Ls = 120'

C. L. HWY. 31 STA. 111+68.38 =
C. L. I-40 STA. 1005+60.91
Δ = 73°20' 52"

STA. 102+61
CONC. DITCH PAVING (TYPE B) = 6.00 SQ. YD.

STA. 102+98 CONSTRUCT
D. I. TYPE SPECIAL ON RT. W/ 4' EXTENSION
H = 1' 0"
TYPE SPECIAL D. I. = 4' X 8'

STA. 102+98
CONC. DITCH PAVING (TYPE B) = 4.46 SQ. YD.

STA. 103+85 CONSTRUCT
D. I. TYPE SPECIAL ON RT. W/ 4' EXTENSION
H = 1' 0"
TYPE SPECIAL D. I. = 4' X 16'

STA. 103+85
CONC. DITCH PAVING (TYPE B) = 6.16 SQ. YD.

STA. 101+43 CONSTRUCT
TYPE 3 WHEELCHAIR RAMP ON RT.
= 10.8 SQ. YDS.

STA. 103+12 CONSTRUCT
TURNOUT ON RT. = 10 CU. YDS. COMP. EMB.

STA. 102+69 CONSTRUCT
TYPE 3 WHEELCHAIR RAMP ON RT.
= 4.1 SQ. YDS.

STA. 103+14 IN PLACE
36" X 50' R.C. PIPE CULVERT
WITH HDWLS LT. AND RT.
REMOVE HDWL LT. AND EXTEND R.C. PIPE
4' LT.
FOR A COMPLETED LENGTH OF 54'
WITH FES LT.
(CLASS III)(TYPE 3 BEDDING)
36" R.C. PIPE = 8 LIN. FT.

STA. 106+00 CONSTRUCT
D. I. TYPE SPECIAL ON RT. W/ 8' EXTENSION
H = 1' 0"
TYPE SPECIAL D. I. = 4' X 16'

STA. 106+00
CONC. DITCH PAVING (TYPE B) = 18.72 SQ. YD.

STA. 102+76 CONSTRUCT
TYPE 3 WHEELCHAIR RAMP ON RT.
= 10.7 SQ. YDS.

STA. 103+40 CONSTRUCT
TYPE 3 WHEELCHAIR RAMP ON RT.
= 14.0 SQ. YDS.

HWY. 31
P. I. = 104+75.54
Δ = 5°30' 24" RT.
D = 1°00' 00"
T = 275.54'
L = 550.67'
P. C. = 102+00.00
P. T. = 107+50.67
NO SUPER

STA. 102+00.00
BEGIN JOB 061613
BEGIN SITE I
LOG MILE 1.48

BRIDGE END
STA. 110+57.25
ELEV. 257.61

STA. 110+38.21 TO STA. 112+64.07 - IN PLACE
BR. NO. 03228
222' X 31' - 8" CLEAR ROADWAY WIDTH
REMOVAL OF EXISTING BRIDGE STRUCTURE
(SITE NO. 1) = 1.00 LUMP SUM

BRIDGE END
STA. 112+79.51
ELEV. 257.18

STA. 110+61 CONSTRUCT
D. I. ON RT.
& 18" X 20' STUB OUTLET W/ F. E. S. RT.
H = 6' 6"
TY E = 3' X 3'
18" R. C. PIPE = 20 LIN. FT.
18" F. E. S. = 1 EACH

ALL R. C. PIPE CULVERTS SHALL BE
CLASS III UNLESS OTHERWISE SPECIFIED.
FOR ALL R. C. PIP CULVERT INSTALLATIONS
USE TYPE 3 BEDDING UNLESS OTHERWISE SPECIFIED.
FOR ALL SLPCCS PIPE CULVERT INSTALLATIONS
USE TYPE 2 BEDDING UNLESS OTHERWISE SPECIFIED.

SITE I

MM41715 7/24/2023
R061613.DGN

DATE REVISED	DATE REVISED	FED.RD. DIST.NO.	STATE	JOB NO.	SHEET NO.	TOTAL SHEETS
		6	ARK.	061613	64	215
		PLAN AND PROFILE SHEETS				

STATE OF ARKANSAS
LICENSED PROFESSIONAL ENGINEER
No. 11425
TRINITY D. SMITH

Aug 16 2023 3:23 PM

DocuSign

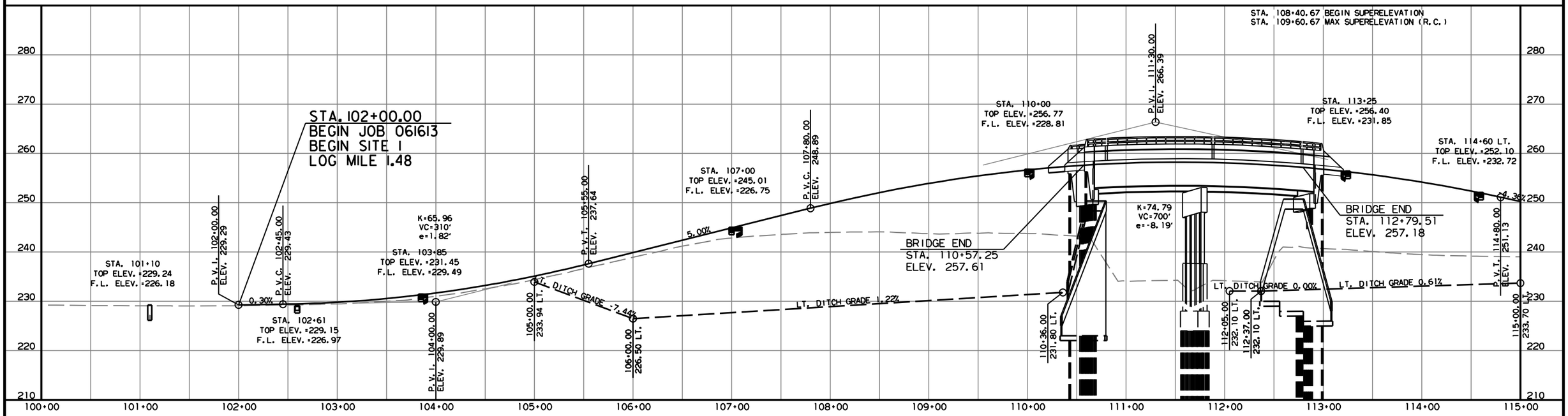

REFER TO SURVEY CONTROL DETAIL SHEETS FOR HORIZONTAL AND VERTICAL CONTROL DATA.

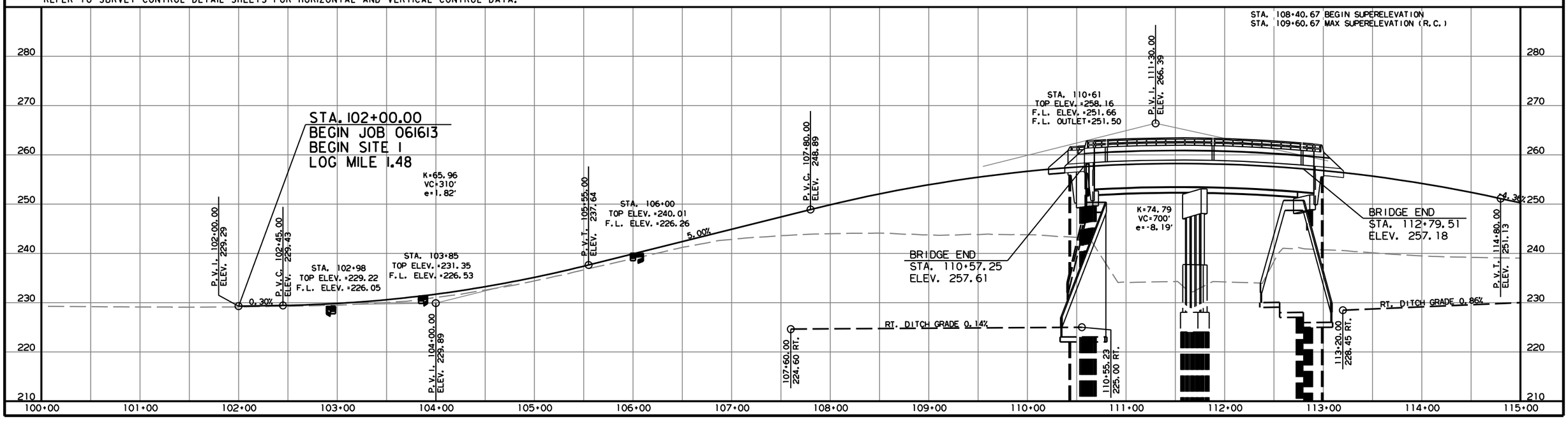

MM41715 7/24/2023
R061613.DGN

DATE REVISED	DATE REVISED	FED.RD. DIST.NO.	STATE	JOB NO.	SHEET NO.	TOTAL SHEETS
		6	ARK.	061613	65	215
		PLAN AND PROFILE SHEETS				

STATE OF ARKANSAS
LICENSED PROFESSIONAL ENGINEER
No. 11425
TRINITY D. SMITH

Aug 16 2023 3:23 PM

DocuSign

STA. 116+00 CONSTRUCT
D. I. TYPE SPECIAL ON LT. W/ 4' EXTENSION
H = 1' 0"
TYPE SPECIAL D. I. = 4' X 8'

STA. 116+00
CONC. DITCH PAVING (TYPE B) = 16.50 SQ. YD.

STA. 117+55 CONSTRUCT
D. I. TYPE SPECIAL ON LT. W/ 4' EXTENSION
H = 1' 0"
TYPE SPECIAL D. I. = 4' X 8'

STA. 117+55
CONC. DITCH PAVING (TYPE B) = 10.98 SQ. YD.

STA. 118+85 CONSTRUCT
JUNCTION BOX ON LT.
& 18" X 25' PIPE OUTLET
CONNECT TO D. I. @ STA. 118+55 LT.
H = 4' 5"
TYPE E JUNCTION BOX = 4' X 4'
18" SLPCCS PIPE = 25 LIN. FT.
18" R.C. PIPE = 25 LIN. FT.

STA. 118+55 CONSTRUCT
D. I. ON LT. W/ 8' EXTENSION
& 18" X 45' STUB OUTLET W/ F.E.S. LT.
H = 4' 9"
TY C = 4' X 4'
TY MO = 4' I.D.
18" R.C. PIPE (CLASS IV) = 45 LIN. FT.
18" F.E.S. = 1 EACH

HWY. 31
P. I. = 114+06.51
Δ = 16°32' 20" LT.
D = 1°45' 00"
T = 475.84'
L = 945.08'
P. C. = 109+30.67
P. T. = 118+75.75
e = R.C.
Ls = 120'

C.L. HWY. 31 STA. 119+25.94 =
C.L. BROWNSVILLE LOOP STA. 306+65.84
Δ = 86°36' 40"

STA. 118+92 CONSTRUCT
D. I. ON LT. W/ 8' EXTENSION
& 18" X 61' PIPE OUTLET
CONNECT TO JUNCTION BOX @ STA. 118+85 LT.
H = 3' 9"
TY C = 4' X 4'
TY MO = 4' I.D.
18" SLPCCS PIPE = 61 LIN. FT.
18" R.C. PIPE = 61 LIN. FT.

STA. 119+00 CONSTRUCT
D. I. ON LT. W/ 4' EXTENSION
& 18" X 37' PIPE OUTLET
CONNECT TO JUNCTION BOX @ STA. 118+85 LT.
H = 3' 9"
TY C = 4' X 4'
TY MO = 4' I.D.
18" SLPCCS PIPE = 37 LIN. FT.
18" R.C. PIPE = 37 LIN. FT.

STA. 118+66 CONSTRUCT
TYPE X WHEELCHAIR RAMP ON RT.
= 7.2 SQ. YDS.

STA. 118+83 CONSTRUCT
TYPE X WHEELCHAIR RAMP ON RT.
= 6.6 SQ. YDS.

STA. 118+88 CONSTRUCT
TYPE 3 WHEELCHAIR RAMP ON RT.
= 6.7 SQ. YDS.

STA. 119+95 CONSTRUCT
D. I. ON LT. W/ 4' EXTENSION LT. & RT.
& 18" X 14' PIPE OUTLET
CONNECT TO D. I. @ STA. 119+95 LT.
H = 3' 8"
TY C = 4' X 4'
TY MO = 4' I.D.
18" SLPCCS PIPE = 14 LIN. FT.
18" R.C. PIPE = 14 LIN. FT.

STA. 119+95 CONSTRUCT
D. I. ON LT. W/ 4' EXTENSION
& 18" X 47' PIPE OUTLET
CONNECT TO JUNCTION BOX @ STA. 306+02 LT.
H = 3' 8"
TY C = 4' X 4'
18" SLPCCS PIPE = 47 LIN. FT.
18" R.C. PIPE = 47 LIN. FT.

STA. 119+69 CONSTRUCT
TYPE 2 WHEELCHAIR RAMP ON LT.
= 11.8 SQ. YDS.

ALL R.C. PIPE CULVERTS SHALL BE
CLASS III UNLESS OTHERWISE SPECIFIED.
FOR ALL R.C. PIP CULVERT INSTALLATIONS
USE TYPE 3 BEDDING UNLESS OTHERWISE SPECIFIED.
FOR ALL SLPCCS PIPE CULVERT INSTALLATIONS
USE TYPE 2 BEDDING UNLESS OTHERWISE SPECIFIED.

STA. 120+85 CONSTRUCT
D. I. ON LT. W/ 4' EXTENSION
& 18" X 86' PIPE OUTLET
CONNECT TO D. I. @ STA. 119+95 LT.
H = 3' 5"
TY C = 4' X 3'
TY MO = 4' I.D.
18" SLPCCS PIPE = 86 LIN. FT.
18" R.C. PIPE = 86 LIN. FT.

STA. 120+41 CONSTRUCT
APPROACH ON LT. = 5 CU. YDS. COMP. EMB.

FENCING STA.	STA.	SIDE	(TYPE A) LIN. FT.
119+76	119+84	LT.	17
119+78	120+26	RT.	100

STA. 120+95 CONSTRUCT
TYPE 3 WHEELCHAIR RAMP ON LT.
= 4.1 SQ. YDS.

STA. 122+00 CONSTRUCT
TYPE 3 WHEELCHAIR RAMP ON RT.
= 9.4 SQ. YDS.

STA. 121+18.00
END SITE I

STA. 118+98 CONSTRUCT
D. I. ON RT. W/ 8' EXTENSION
& 18" X 52' STUB OUTLET W/ F.E.S. RT.
H = 4' 0"
TY C = 4' X 4'
TY MO = 4' I.D.
18" R.C. PIPE (CLASS IV) = 52 LIN. FT.
18" F.E.S. = 1 EACH

STA. 118+14 CONSTRUCT
TYPE 3 WHEELCHAIR RAMP ON LT.
= 7.2 SQ. YDS.

STA. 118+30 CONSTRUCT
TYPE 3 WHEELCHAIR RAMP ON LT.
= 6.6 SQ. YDS.

STA. 118+88 CONSTRUCT
TYPE 3 WHEELCHAIR RAMP ON LT.
= 6.7 SQ. YDS.

STA. 120+47 CONSTRUCT
APPROACH ON RT. = 5 CU. YDS. UNCL. EXC.

STA. 119+69 CONSTRUCT
TYPE 2 WHEELCHAIR RAMP ON RT.
= 12.6 SQ. YDS.

STA. 119+80 CONSTRUCT
D. I. ON RT.
& 18" X 40' PIPE OUTLET
CONNECT TO JUNCTION BOX @ STA. 307+45 RT.
H = 4' 2"
TY C = 4' X 4'
TY MO = 4' I.D.
18" SLPCCS PIPE = 40 LIN. FT.
18" R.C. PIPE = 40 LIN. FT.

STA. 120+08 CONSTRUCT
D. I. ON RT.
& 18" X 26' PIPE OUTLET
CONNECT TO D. I. @ STA. 119+80 RT.
H = 3' 8"
TY C = 4' X 4'
TY MO = 4' I.D.
18" SLPCCS PIPE = 26 LIN. FT.
18" R.C. PIPE = 26 LIN. FT.

STA. 120+85 CONSTRUCT
D. I. ON RT.
& 18" X 73' PIPE OUTLET
CONNECT TO D. I. @ STA. 120+08 RT.
H = 3' 5"
TY C = 4' X 3'
TY MO = 4' I.D.
18" SLPCCS PIPE = 73 LIN. FT.
18" R.C. PIPE = 73 LIN. FT.

SITE I

MM41715 7/24/2023
R06I6I3.DGN

DATE REVISED	DATE REVISED	FED.RD. DIST.NO.	STATE	JOB NO.	SHEET NO.	TOTAL SHEETS
		6	ARK.	061613	66	215
		PLAN AND PROFILE SHEETS				

STATE OF ARKANSAS
LICENSED PROFESSIONAL ENGINEER
No. 11425
TRINITY D. SMITH

Aug 16 2023 3:23 PM

DocuSign

LT. SIDE OF SITE I

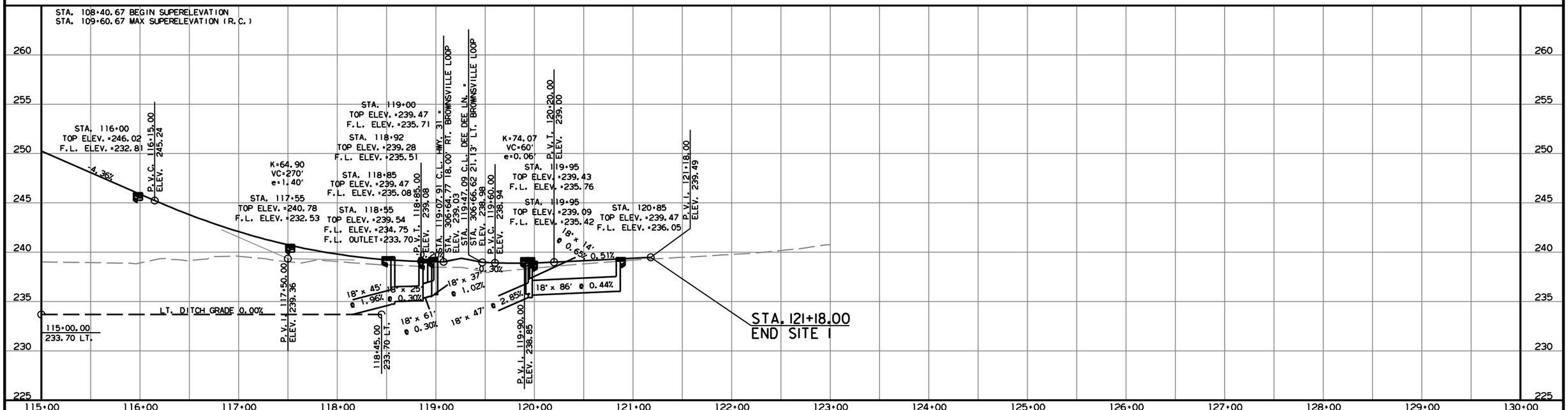

RT. SIDE OF SITE I

REFER TO SURVEY CONTROL DETAIL SHEETS FOR HORIZONTAL AND VERTICAL CONTROL DATA.

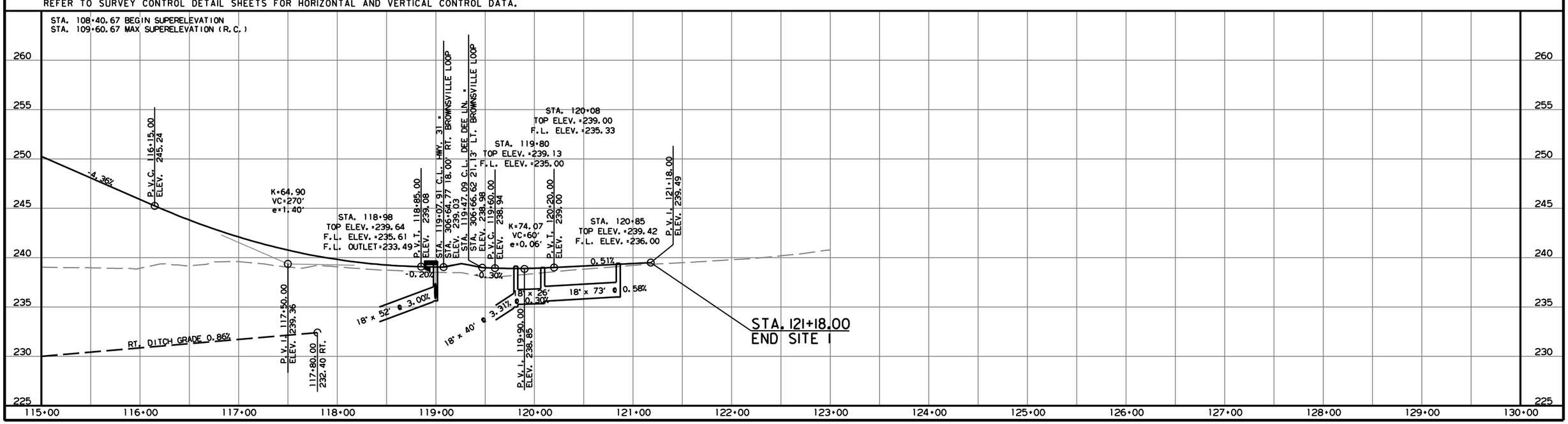

MM41715 7/24/2023
R061613.DGN

DATE REVISED	DATE REVISED	FED.RD. DIST.NO.	STATE	JOB NO.	SHEET NO.	TOTAL SHEETS
		6	ARK.	061613	67	215
		PLAN AND PROFILE SHEETS				

STATE OF ARKANSAS
LICENSED PROFESSIONAL ENGINEER
No. 11425
TRINITY D. SMITH

Aug 16 2023 3:24 PM

DocuSign

REMOVAL & DISPOSAL OF FENCE
STA. 305+85.00 TO STA. 306+38.00 LT. OF BROENSVILLE LOOP = 53 LIN. FT.
STA. 307+01.00 TO STA. 307+82.00 RT. OF BROWNSVILEE LOOP = 81LIN. FT.

STA. 306+02 CONSTRUCT
JUNCTION BOX ON LT.
& 42" X 140' PIPE OUTLET
CONNECT TO JUNCTION BOX @ STA. 307+45 LT.
H = 5' 6"
TYPE E JUNCTION BOX = 6' X 4'
42" R.C. PIPE (CLASS V) = 140 LIN.FT.

STA. 305+15 CONSTRUCT
D. I. ON LT.
& 42" X 84' PIPE OUTLET
CONNECT TO JUNCTION BOX @ STA. 306+02 LT.
H = 5' 1"
TY C = 4' X 5'
TY MO = 5' I.D.
42" SLPCCS PIPE = 84 LIN.FT.
42" R.C. PIPE = 84 LIN.FT.

STA. 304+25 CONSTRUCT
D. I. ON LT.
& 36" X 85' PIPE OUTLET
CONNECT TO D. I. @ STA. 305+15 LT.
H = 4' 9"
TY C = 4' X 5'
TY MO = 5' I.D.
36" SLPCCS PIPE = 85 LIN.FT.
36" R.C. PIPE = 85 LIN.FT.

STA. 303+20 CONSTRUCT
TYPE 3 WHEELCHAIR RAMP ON LT.
= 3.9 SQ. YDS.

STA. 303+35 CONSTRUCT
D. I. ON LT.
& 36" X 5' STUB INLET W/ F.E.S. LT.
& 36" X 85' PIPE OUTLET
CONNECT TO D. I. @ STA. 304+25 LT.
H = 4' 4"
TY C = 4' X 4'
TY MO = 5' I.D.
36" R.C. PIPE = 90 LIN.FT.
36" SLPCCS PIPE = 85 LIN.FT.
36" F.E.S. = 1 EACH

STA. 307+45 CONSTRUCT
JUNCTION BOX ON LT.
& 42" X 116' PIPE OUTLET
CONNECT TO D. I. @ STA. 308+65 LT.
H = 6' 2"
TYPE E JUNCTION BOX = 6' X 4'
42" SLPCCS PIPE = 116 LIN.FT.
42" R.C. PIPE = 116 LIN.FT.

STA. 308+65 CONSTRUCT
D. I. ON LT.
& 42" X 102' PIPE OUTLET
CONNECT TO D. I. @ STA. 309+72 LT.
H = 6' 3"
TY C = 4' X 5'
TY MO = 5' I.D.
42" SLPCCS PIPE = 102 LIN.FT.
42" R.C. PIPE = 102 LIN.FT.

C.L. HWY. 31 STA. 119+25.94 =
C.L. BROWNSVILLE LOOP STA. 306+65.84
Δ = 86°36'40"

STA. 311+22 CONSTRUCT
TYPE 3 WHEELCHAIR RAMP ON LT.
= 3.3 SQ. YDS.

STA. 309+72 IN PLACE
36" X 50' R.C. PIPE CULVERT
WITH HDWLS. LT AND RT.
REMOVE

STA. 309+72 CONSTRUCT
D. I. ON LT.
& 18" X 11' STUB INLET W/ F.E.S. LT.
& 48" X 39' PIPE OUTLET
CONNECT TO D. I. @ STA. 309+72 RT.
H = 6' 5"
Q50= 122 CFS D.A.=44 ACRES
TY C = 5' X 5'
TY MO = 6' I.D.
48" R.C. PIPE (CLASS V) = 39 LIN.FT.
18" R.C. PIPE = 11 LIN.FT.
18" F.E.S. = 1 EACH

STA. 311+15 CONSTRUCT
D. I. ON LT.
& 42" X 32' STUB INLET W/ F.E.S. LT.
& 42" X 138' PIPE OUTLET
CONNECT TO D. I. @ STA. 309+72 LT.
H = 4' 11"
TY C = 4' X 5'
TY MO = 5' I.D.
42" R.C. PIPE = 170 LIN.FT.
42" SLPCCS PIPE = 138 LIN. FT.
42" F.E.S. = 1 EACH

STA. 303+15.00
BEGIN BROWNSVILLE LOOP

STA. 311+25.00
END HWY. 31

STA. 303+15 CONSTRUCT
D. I. TYPE SPECIAL ON RT. W/ 4' EXTENSION
H = 1' 0"
TYPE SPECIAL D. I. = 4' X 16'

STA. 303+15
CONC. DITCH PAVING (TYPE B) = 1.71 SQ. YD.

STA. 304+25 CONSTRUCT
D. I. TYPE SPECIAL ON RT. W/ 4' EXTENSION
H = 1' 0"
TYPE SPECIAL D. I. = 4' X 16'

STA. 304+25
CONC. DITCH PAVING (TYPE B) = 6.30 SQ. YD.

STA. 305+31 CONSTRUCT
D. I. ON RT.
& 18" X 3' PIPE OUTLET
CONNECT TO D. I. @ STA. 118+92 RT.
H = 3' 0"
TYPE ST D. I. = 3' X 3'
18" SLPCCS PIPE = 3 LIN.FT.
18" R.C. PIPE = 3 LIN.FT.

STA. 306+34 CONSTRUCT
D. I. ON RT.
& 18" X 3' PIPE OUTLET
CONNECT TO D. I. @ STA. 119+00 RT.
H = 3' 0"
TYPE ST D. I. = 3' X 3'
18" SLPCCS PIPE = 3 LIN.FT.
18" R.C. PIPE = 3 LIN.FT.

STA. 302+35 CONSTRUCT
TYPE 3 WHEELCHAIR RAMP ON RT.
= 11.4 SQ. YDS.

STA. 306+09 CONSTRUCT
TYPE 3 WHEELCHAIR RAMP ON RT.
= 3.3 SQ. YDS.

HWY. 31
P. I. = 307+75.37
Δ = 1°23'26" RT.
D = 1°00'00"
T = 69.53'
L = 139.06'
P. C. = 307+05.84
P. T. = 308+44.90
NO SUPER

STA. 307+30 CONSTRUCT
TYPE 3 WHEELCHAIR RAMP ON RT.
= 3.3 SQ. YDS.

STA. 308+80 CONSTRUCT
D. I. TYPE SPECIAL ON RT. W/ 4' EXTENSION
H = 1' 0"
TYPE SPECIAL D. I. = 4' X 8'

STA. 308+80
CONC. DITCH PAVING (TYPE B) = 1.58 SQ. YD.

STA. 306+85 CONSTRUCT
D. I. ON RT.
& 18" X 69' PIPE OUTLET
CONNECT TO D. I. @ STA. 118+98 RT.
H = 3' 0"
TYPE ST D. I. = 3' X 3'
18" R.C. PIPE (CLASS V) = 69 LIN.FT.

STA. 310+72 CONSTRUCT
TYPE 3 WHEELCHAIR RAMP ON RT.
= 5.6 SQ. YDS.

STA. 307+80 CONSTRUCT
D. I. ON RT.
& 18" X 23' PIPE OUTLET
CONNECT TO D. I. @ STA. 118+98 RT.
H = 3' 0"
TYPE ST D. I. = 3' X 3'
18" R.C. PIPE (CLASS V) = 23 LIN.FT.

STA. 309+72 CONSTRUCT
D. I. ON RT. W/ 4' EXTENSION
& 48" X 18' STUB OUTLET W/ F.E.S. RT.
H = 7' 0"
TY C = 5' X 5'
TY MO = 6' I.D.
48" R.C. PIPE = 18 LIN.FT.
48" F.E.S. = 1 EACH

STA. 310+40 CONSTRUCT
D. I. TYPE SPECIAL ON RT.
H = 1' 0"
TYPE SPECIAL D. I. = 4' X 8'

STA. 310+40
CONC. DITCH PAVING (TYPE B) = 2.01 SQ. YD.

ALL R.C. PIPE CULVERTS SHALL BE
CLASS III UNLESS OTHERWISE SPECIFIED.
FOR ALL R.C. PIP CULVERT INSTALLATIONS
USE TYPE 3 BEDDING UNLESS OTHERWISE SPECIFIED.
FOR ALL SLPCCS PIPE CULVERT INSTALLATIONS
USE TYPE 2 BEDDING UNLESS OTHERWISE SPECIFIED.

BROWNSVILLE LOOP/HWY. 31

WM41715 7/24/2023
R061613.DGN

DATE REVISED	DATE REVISED	FED.RD. DIST.NO.	STATE	JOB NO.	SHEET NO.	TOTAL SHEETS
		6	ARK.	061613	68	215
		PLAN AND PROFILE SHEETS				

STATE OF ARKANSAS
LICENSED PROFESSIONAL ENGINEER
No. 11425
TRINITY D. SMITH

Aug 16 2023 3:24 PM

DocuSign

LT. SIDE OF BROWNSVILLE LOOP/HWY. 31

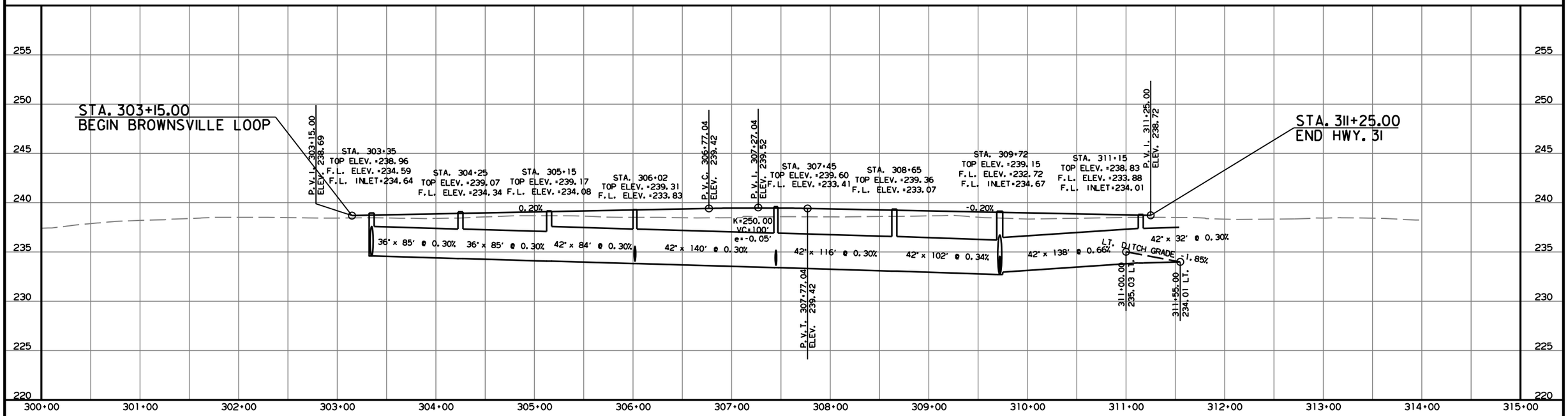

REFER TO SURVEY CONTROL DETAIL SHEETS FOR HORIZONTAL AND VERTICAL CONTROL DATA.

RT. SIDE OF BROWNSVILLE LOOP/HWY. 31

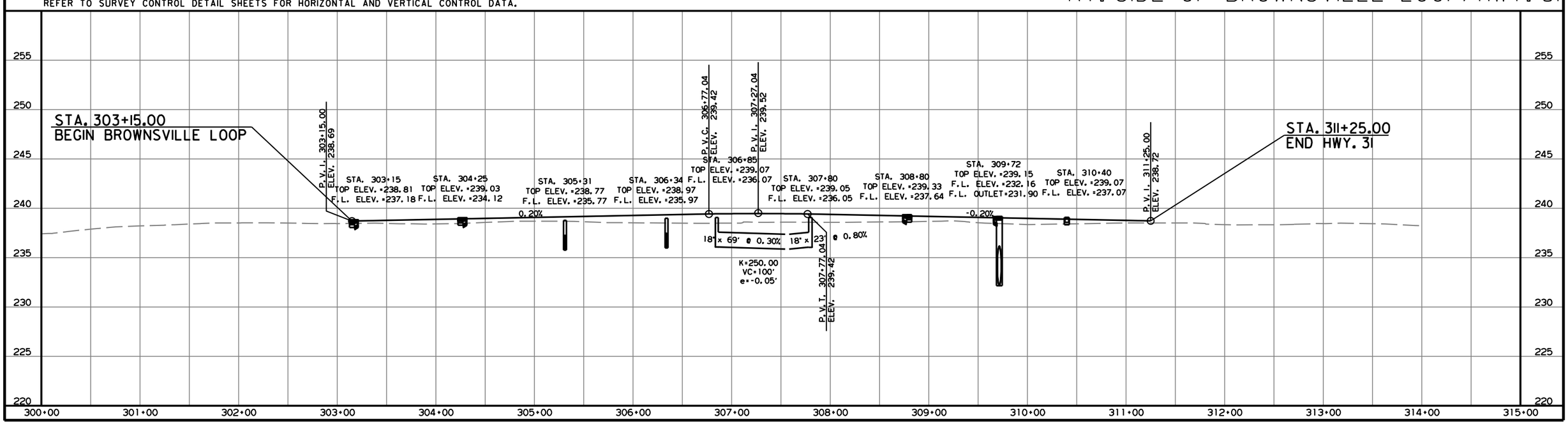

MM41715 7/24/2023
R061613.DGN

DATE REVISED	DATE REVISED	FED.RD. DIST.NO.	STATE	JOB NO.	SHEET NO.	TOTAL SHEETS
		6	ARK.	061613	69	215
		PLAN AND PROFILE SHEETS				

STATE OF ARKANSAS
LICENSED PROFESSIONAL ENGINEER
No. 11425
TRINITY D. SMITH

Aug 16 2023 3:24 PM

DocuSign

ALL R.C. PIPE CULVERTS SHALL BE
CLASS III UNLESS OTHERWISE SPECIFIED.
FOR ALL R.C. PIP CULVERT INSTALLATIONS
USE TYPE 3 BEDDING UNLESS OTHERWISE SPECIFIED.
FOR ALL SLPCCS PIPE CULVERT INSTALLATIONS
USE TYPE 2 BEDDING UNLESS OTHERWISE SPECIFIED.

STA. 203+52 CONSTRUCT
D. I. ON LT.
& 18" X 7' STUB INLET W/ F.E.S. LT.
& 36" X 201' PIPE OUTLET
CONNECT TO D. I. @ STA. 201+46 LT.
H = 5' 3"
TY C = 4' X 4'
TY MO = 5' I.D.
18" R.C. PIPE = 208 LIN.FT.
36" SLPCCS PIPE = 201 LIN.FT.
18" F.E.S. = 1 EACH

STA. 205+50 CONSTRUCT
D. I. TYPE SPECIAL ON LT. W/ 4' EXTENSION
H = 1' 0"
TYPE SPECIAL D. I. = 4' X 8'

STA. 205+50
CONC. DITCH PAVING (TYPE B) = 2.61 SQ. YD.

STA. 205+13 IN PLACE
18" X 31' CM
PIPE CULVERT LT. SIDE DRAIN
REMOVE AND INSTALL
18" X 32' PIPE CULVERT
LT. SIDE DRAIN
CONSTRUCT APPROACH ON LT. = 40 CU. YDS. COMP. EMB.

STA. 207+50 CONSTRUCT
D. I. TYPE SPECIAL ON LT. W/ 4' EXTENSION
H = 1' 0"
TYPE SPECIAL D. I. = 4' X 8'

STA. 207+50
CONC. DITCH PAVING (TYPE B) = 13.91 SQ. YD.

STA. 210+50 CONSTRUCT
D. I. TYPE SPECIAL ON LT. W/ 4' EXTENSION
H = 1' 0"
TYPE SPECIAL D. I. = 4' X 8'

STA. 210+50
CONC. DITCH PAVING (TYPE B) = 29.72 SQ. YD.

STA. 201+46 CONSTRUCT
D. I. ON LT.
& 36" X 82' PIPE OUTLET
CONNECT TO EXIST. D. I. @ STA. 200+61 LT.
H = 4' 10
TY C = 4' X 4'
TY MO = 5' I.D.
36" SLPCCS PIPE = 82 LIN.FT.
36" R.C. PIPE =

STA. 214+00 CONSTRUCT
D. I. TYPE SPECIAL ON LT. W/ 4' EXTENSION
H = 1' 0"
TYPE SPECIAL D. I. = 4' X 8'

STA. 214+00
CONC. DITCH PAVING (TYPE B) = 33.01 SQ. YD.

HWY. 13
P. I. = 213+33.76
Δ = 13°17'36" LT.
D = 2°15'00"
T = 296.74'
L = 590.81'
P. C. = 210+37.02
P. T. = 216+27.83
e = 0.026'/'
Ls = 125'

STA. 202+56 CONSTRUCT
APPROACH ON LT. = 5 CU. YDS. COMP. EMB.

100' TRANSITION

STA. 201+90 CONSTRUCT
APPROACH ON LT. = 5 CU. YDS. UNCLASS. EXCAV.

C.L. HWY. 13 STA. 212+32.23 =
C.L. I-40 STA. 2005+57.57
Δ = 79°40'31"

270' TAPER

EXIST. R/W & C/A

PROPOSED CONST. LIMITS

BEGIN EXIST. C/A

P. O. B. 200+00.00

P. I. 205+59.60

P. C. 210+37.02

N 81°59'26" E
I-40

PROPOSED CONST. LIMITS

STA. 211+03.51 TO STA. 213+32.20 - IN PLACE
BR. NO. 03655
224' X 33' - 8" CLEAR ROADWAY WIDTH
REMOVAL OF EXISTING BRIDGE STRUCTURE
(SITE NO. 2) = 1.00 LUMP SUM

EXIST. R/W

N 1°19'03" E

PROPOSED CONST. LIMITS

N 6°42'27" E

N 6°35'09" W

P. C. 202+00.00

BEGIN EXIST. C/A

EXIST. R/W & C/A

STA. 202+00.00
BEGIN SITE 2
LOG MILE 1.24

HWY. 13
P. I. = 205+59.60
Δ = 5°23'24" RT.
D = 0°45'00"
T = 359.60'
L = 718.67'
P. C. = 202+00.00
P. T. = 209+18.67
NO SUPER

P. T. 209+18.67

P. T. 213+33.76

BRIDGE END
STA. 211+11.13
ELEV. 263.39

BRIDGE END
STA. 213+38.33
ELEV. 263.04

STA. 201+75 CONSTRUCT
APPROACH ON RT. = 5 CU. YDS. COMP. EMB.

STA. 201+21 CONSTRUCT
D. I. ON RT.
& 18" X 99' PIPE OUTLET
CONNECT TO EXIST. D. I. @ STA. 200+19 RT.
H = 3' 8"
TY C = 4' X 3'
TY MO = 4' I.D.
18" SLPCCS PIPE = 99 LIN.FT.
18" R.C. PIPE = 99 LIN.FT.

STA. 203+91 CONSTRUCT
TYPE 3 WHEELCHAIR RAMP ON RT.
= 3.3 SQ. YDS.

STA. 203+55 CONSTRUCT
D. I. TYPE SPECIAL ON RT.
H = 1' 0"
TYPE SPECIAL D. I. = 4' X 8'

STA. 203+55
CONC. DITCH PAVING (TYPE B) = 3.48 SQ. YD.

STA. 206+00 CONSTRUCT
D. I. TYPE SPECIAL ON RT. W/ 4' EXTENSION
H = 1' 0"
TYPE SPECIAL D. I. = 4' X 8'

STA. 206+00
CONC. DITCH PAVING (TYPE B) = 7.66 SQ. YD.

STA. 208+50 CONSTRUCT
D. I. TYPE SPECIAL ON RT. W/ 4' EXTENSION
H = 1' 0"
TYPE SPECIAL D. I. = 4' X 8'

STA. 208+50
CONC. DITCH PAVING (TYPE B) = 24.86 SQ. YD.

REMOVAL & DISPOSAL OF GUARD RAIL
STA. 209+98.67 TO STA. 210+71.66 LT. OF HWY. 13 = 75 LIN. FT.
STA. 210+06.56 TO STA. 210+76.11 RT. OF HWY. 13 = 75 LIN. FT.
STA. 213+57.28 TO STA. 214+34.03 LT. OF HWY. 13 = 75 LIN. FT.
STA. 213+62.09 TO STA. 214+37.24 RT. OF HWY. 13 = 75 LIN. FT.

STA. 202+15 CONSTRUCT
D. I. ON LT.
& 18" X 90' PIPE OUTLET
CONNECT TO D. I. @ STA. 201+21 RT.
H = 3' 8"
TY C = 4' X 3'
TY MO = 4' I.D.
18" SLPCCS PIPE = 90 LIN.FT.
18" R.C. PIPE = 90 LIN.FT.

STA. 204+24 CONSTRUCT
D. I. TYPE SPECIAL ON RT. W/ 4' EXTENSIONS
H = 1' 0"
TYPE SPECIAL D. I. = 4' X 8'

STA. 204+24
CONC. DITCH PAVING (TYPE B) = 2.61 SQ. YD.

2010
SITE 2

MM41715 7/24/2023
R061613.DGN

DATE REVISED	DATE REVISED	FED.RD. DIST.NO.	STATE	JOB NO.	SHEET NO.	TOTAL SHEETS
		6	ARK.	061613	70	215
		PLAN AND PROFILE SHEETS				

STATE OF ARKANSAS
LICENSED PROFESSIONAL ENGINEER
No. 11425
TRINITY D. SMITH

Aug 16 2023 3:24 PM

DocuSign

LT. SIDE OF SITE 2

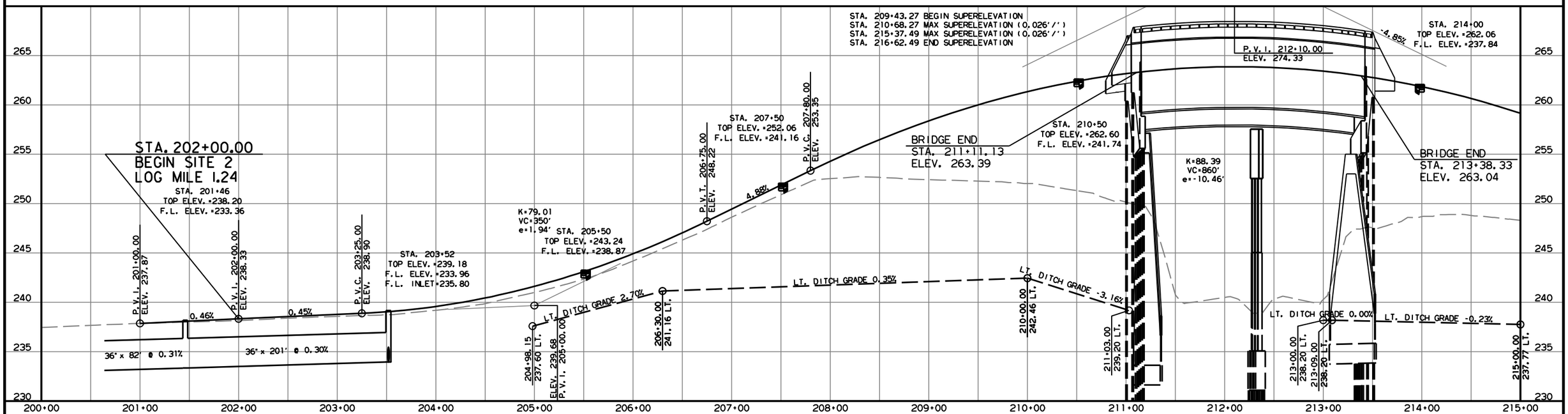

RT. SIDE OF SITE 2

REFER TO SURVEY CONTROL DETAIL SHEETS FOR HORIZONTAL AND VERTICAL CONTROL DATA.

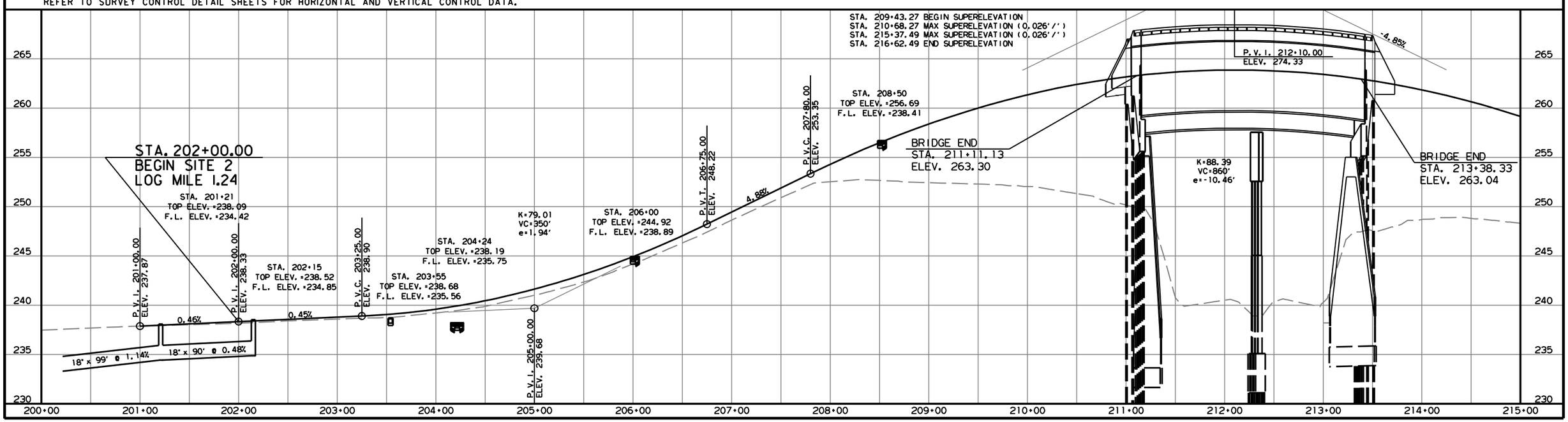

MM41715 7/24/2023
R061613.DGN

DATE REVISED	DATE REVISED	FED.RD. DIST.NO.	STATE	JOB NO.	SHEET NO.	TOTAL SHEETS
		6	ARK.	061613	71	215
		PLAN AND PROFILE SHEETS				

STATE OF ARKANSAS
LICENSED PROFESSIONAL ENGINEER
No. 11425
TRINITY D. SMITH

Aug 16 2023 3:25 PM

DocuSign

ALL R.C. PIPE CULVERTS SHALL BE
CLASS III UNLESS OTHERWISE SPECIFIED.
FOR ALL R.C. PIP CULVERT INSTALLATIONS
USE TYPE 3 BEDDING UNLESS OTHERWISE SPECIFIED.
FOR ALL SLPCCS PIPE CULVERT INSTALLATIONS
USE TYPE 2 BEDDING UNLESS OTHERWISE SPECIFIED.

STA. 219+60 IN PLACE
24" x 61' R.C. PIPE CULVERT ON LT.
WITH HDWLS. LT. AND RT.
REMOVE AND CONSTRUCT
24" x 64' R.C. PIPE CULVERT ON LT.
(CLASS IV)(TYPE 3 BEDDING) WITH
FES LT. & RT.
24" R.C. PIPE = 64 LIN.FT.
24" F.E.S. = 2 EACH

STA. 220+40 CONSTRUCT
JUNCTION BOX ON LT.
& 24" X 12' STUB INLET W/ F.E.S. LT.
& 24" X 42' PIPE OUTLET
CONNECT TO D.I. @ STA. 220+40 RT.H = 5' 10"
Q50= 12.56 CFS D.A. =8.00 ACRES
TYPE E JUNCTION BOX = 3' X 3'
24" R.C. PIPE (CLASS III) = 12 LIN.FT.
24" R.C. PIPE (CLASS IV) = 42 LIN.FT.
24" F.E.S. = 1 EACH

STA. 219+65 CONSTRUCT
D.I. TYPE SPECIAL ON LT.
H = 1' 0"
TYPE SPECIAL D.I. = 4' X 8'

STA. 219+65
CONC. DITCH PAVING (TYPE B) = 2.58 SQ. YD.

STA. 221+07 CONSTRUCT
D.I. ON LT.
& 18" X 30' STUB INLET W/ F.E.S. LT.
& 18" X 64' PIPE OUTLET
CONNECT TO JUNCTION BOX @ STA. 220+40 LT.
H = 3' 8"
TY C = 4' X 4'
TY MO = 4' I.D.
18" R.C. PIPE = 94 LIN.FT.
18" SLPCCS PIPE = 64 LIN.FT.
18" F.E.S. = 1 EACH

STA. 217+00 CONSTRUCT
D.I. TYPE SPECIAL ON LT. W/ 8' EXTENSION
H = 1' 0"
TYPE SPECIAL D.I. = 4' X 8'

STA 217+00
CONC. DITCH PAVING (TYPE B) = 21.69 SQ. YD.

HWY. 13
P.I. = 213+33.76
Δ = 13°17' 36" LT.
D = 2°15' 00"
T = 296.74'
L = 590.81'
P.C. = 210+37.02
P.T. = 216+27.83
e = 0.026'/'
Ls = 125'

STA. 217+22 CONSTRUCT
24" x 126' R.C. PIPE CULVERT
(CLASS III)(TYPE 3 BEDDING) WITH
FES LT. & RT.
Q50= 3.70 CFS D.A. = 8.00 ACRES
24" R.C. PIPE = 126 LIN.FT.
24" F.E.S. = 2 EACH

STA. 217+25 IN PLACE
24" x 110' R.C. PIPE CULVERT
WITH HDWLS. LT. AND RT.
REMOVE

STA. 219+59 CONSTRUCT
TURNOUT ON LT. = 45 CU. YDS. COMP. EMB.

100' TRANSITION

EXIST. R/W & C/A

PROPOSED CONST. LIMITS

P.T. 216+27.83

P.T. 218+72.44

N 6°35' 09" W

N 1°17' 20" E

EXIST. R/W

END EXIST. C/A 223+00.00

P.O.E.

END EXIST. C/A

P.T. 220+47.16

P.C. 216+97.16

HWY. 13
P.I. = 218+72.44
Δ = 7°52' 29" RT.
D = 2°15' 00"
T = 175.28'
L = 350.00'
P.C. = 216+97.16
P.T. = 220+47.16
e = 0.026'/'
Ls = 125'

60' TAPER

STA. 221+20.00
END SITE 2
END JOB 061613

STA. 219+56 CONSTRUCT
TURNOUT ON RT. = 35 CU. YDS. COMP. EMB.

STA. 217+23 CONSTRUCT
D.I. TYPE SPECIAL ON RT. W/ 4' EXTENSION
H = 1' 0"
TYPE SPECIAL D.I. = 4' X 8'

STA. 217+23
CONC. DITCH PAVING (TYPE B) = 18.43 SQ. YD.

STA. 218+88 CONSTRUCT
APPROACH ON LT. = 360 CU. YDS. COMP. EMB.

STA. 220+75 CONSTRUCT
D.I. ON RT.
& 18" X 32' PIPE OUTLET
CONNECT TO JUNCTION BOX @ STA. 220+40 RT.
TY C = 4' X 3'
TY MO = 4' I.D.
H = 3' 10"
18" SLPCCS PIPE = 32 LIN.FT.
18" R.C. PIPE = 32 LIN.FT.

STA. 221+07 CONSTRUCT
D.I. ON RT.
& 18" X 30' STUB INLET W/ F.E.S. RT.
& 18" X 28' PIPE OUTLET
CONNECT TO D.I. @ STA. 220+75 RT.
TY C = 4' X 3'
TY MO = 4' I.D.
H = 3' 8"
18" R.C. PIPE = 58 LIN.FT.
18" SLPCCS PIPE = 28 LIN.FT.
18" F.E.S. PIPE = 1 EACH

STA. 220+40 CONSTRUCT
JUNCTION BOX ON RT.
& 24" X 10' STUB OUTLET W/ F.E.S. RT.
TYPE E JUNCTION BOX = 3' X 3'
H = 5' 3"
24" R.C. PIPE = 10 LIN.FT.
24" F.E.S. = 1 EACH

STA. 219+80 CONSTRUCT
D.I. TYPE SPECIAL ON RT.
H = 1' 0"
TYPE SPECIAL D.I. = 4' X 8'

STA. 219+80
CONC. DITCH PAVING (TYPE B) = 1.93 SQ. YD.

SITE 2

MM41715 7/24/2023
R061613.DGN

DATE REVISED	DATE REVISED	FED.RD. DIST.NO.	STATE	JOB NO.	SHEET NO.	TOTAL SHEETS
		6	ARK.	061613	72	215
		PLAN AND PROFILE SHEETS				

STATE OF ARKANSAS
LICENSED PROFESSIONAL ENGINEER
No. 11425
TRINITY D. SMITH

Aug 16 2023 3:25 PM

DocuSign

LT. SIDE OF SITE 2

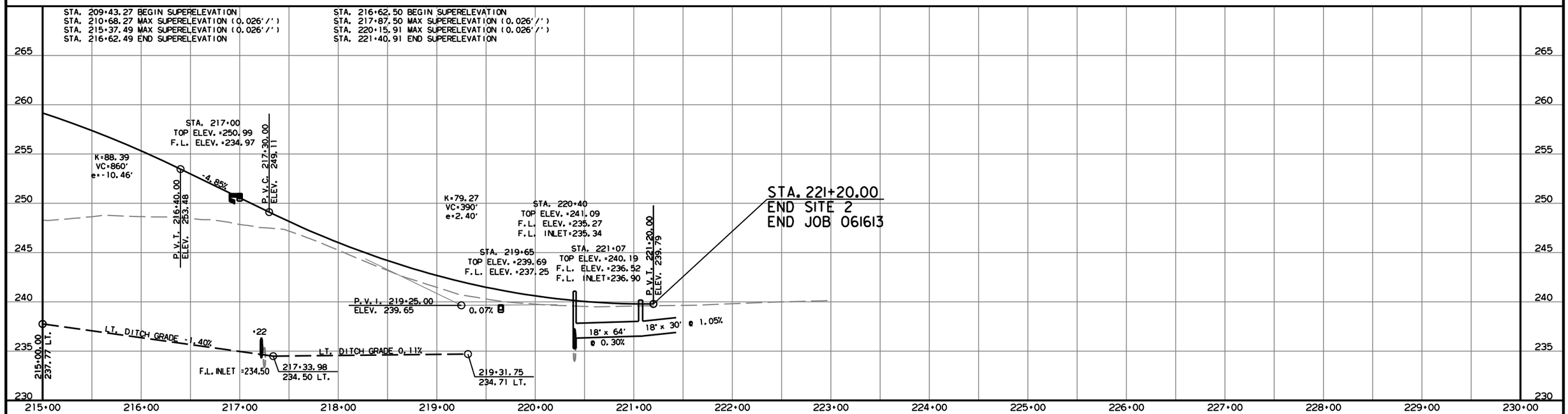

REFER TO SURVEY CONTROL DETAIL SHEETS FOR HORIZONTAL AND VERTICAL CONTROL DATA.

RT. SIDE OF SITE 2

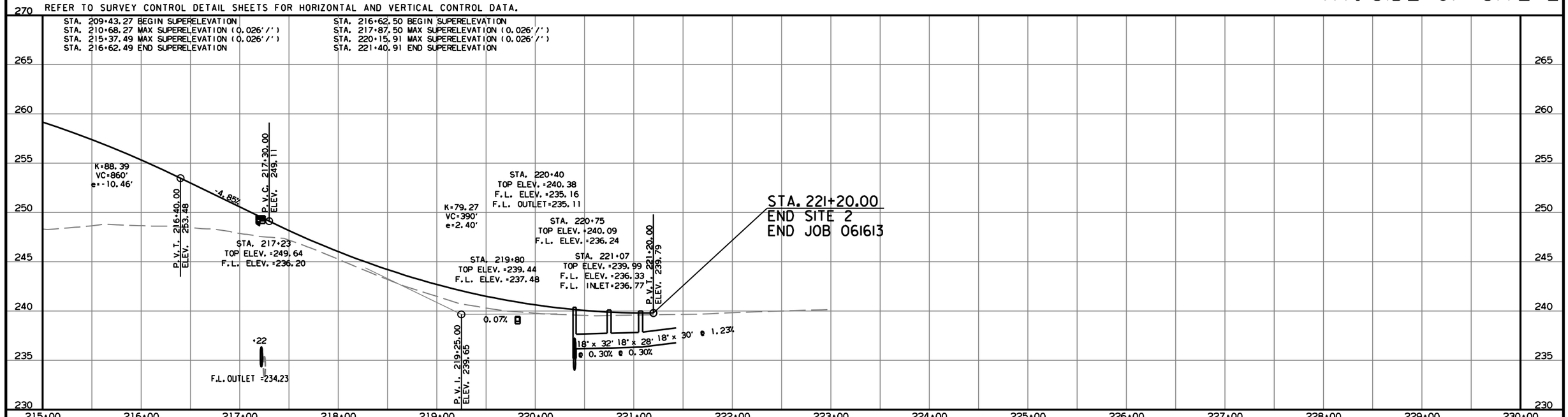

MM41715 7/24/2023
R061613.DGN

DATE REVISED	DATE REVISED	FED.RD. DIST.NO.	STATE	JOB NO.	SHEET NO.	TOTAL SHEETS
		6	ARK.	061613	73	215
		PLAN AND PROFILE SHEETS				

STATE OF ARKANSAS
LICENSED PROFESSIONAL ENGINEER
No. 11425
TRINITY D. SMITH

Aug 16 2023 3:25 PM

DocuSign

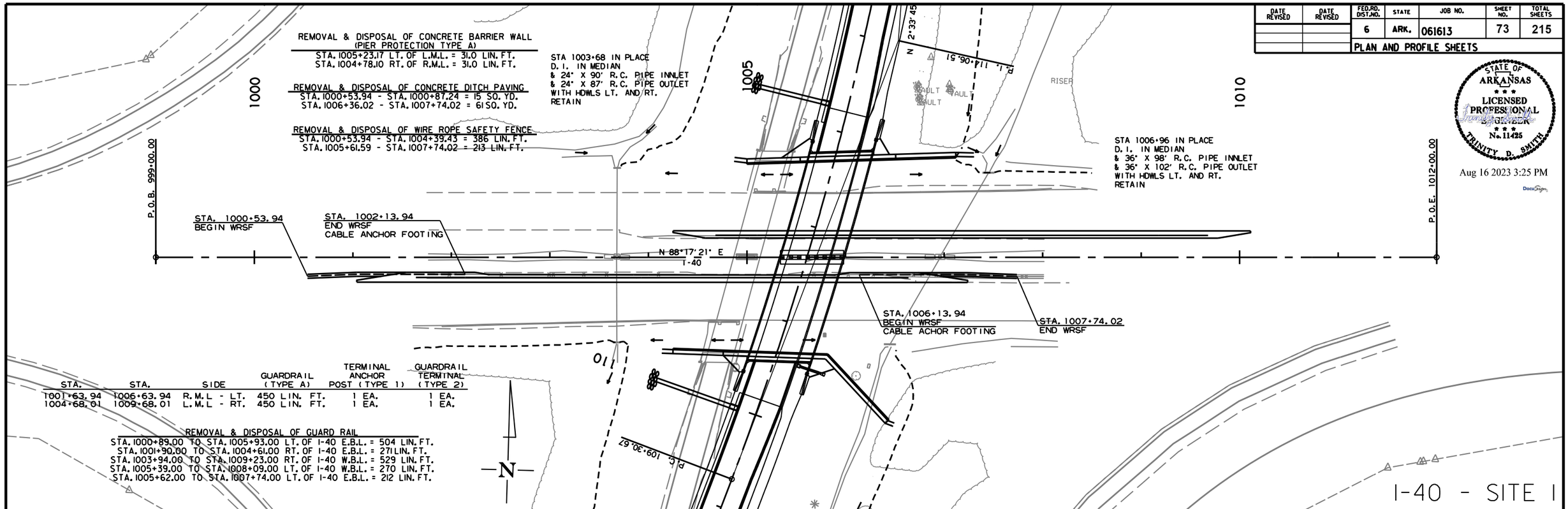

REMOVAL & DISPOSAL OF CONCRETE BARRIER WALL
(PIER PROTECTION TYPE A)
STA. 1005+23.17 LT. OF L.M.L. = 31.0 LIN. FT.
STA. 1004+78.10 RT. OF R.M.L. = 31.0 LIN. FT.

REMOVAL & DISPOSAL OF CONCRETE DITCH PAVING
STA. 1000+53.94 - STA. 1000+87.24 = 15 SQ. YD.
STA. 1006+36.02 - STA. 1007+74.02 = 61 SQ. YD.

REMOVAL & DISPOSAL OF WIRE ROPE SAFETY FENCE
STA. 1000+53.94 - STA. 1004+39.43 = 386 LIN. FT.
STA. 1005+61.59 - STA. 1007+74.02 = 213 LIN. FT.

STA.	STA.	SIDE	GUARDRAIL (TYPE A)	TERMINAL ANCHOR POST (TYPE 1)	GUARDRAIL TERMINAL (TYPE 2)
1001+63.94	1006+63.94	R.M.L - LT.	450 LIN. FT.	1 EA.	1 EA.
1004+68.01	1009+68.01	L.M.L - RT.	450 LIN. FT.	1 EA.	1 EA.

REMOVAL & DISPOSAL OF GUARD RAIL
STA. 1000+89.00 TO STA. 1005+93.00 LT. OF I-40 E.B.L. = 504 LIN. FT.
STA. 1001+90.00 TO STA. 1004+61.00 RT. OF I-40 E.B.L. = 271 LIN. FT.
STA. 1003+94.00 TO STA. 1009+23.00 RT. OF I-40 W.B.L. = 529 LIN. FT.
STA. 1005+39.00 TO STA. 1008+09.00 LT. OF I-40 W.B.L. = 270 LIN. FT.
STA. 1005+62.00 TO STA. 1007+74.00 LT. OF I-40 E.B.L. = 212 LIN. FT.

I-40 - SITE 1

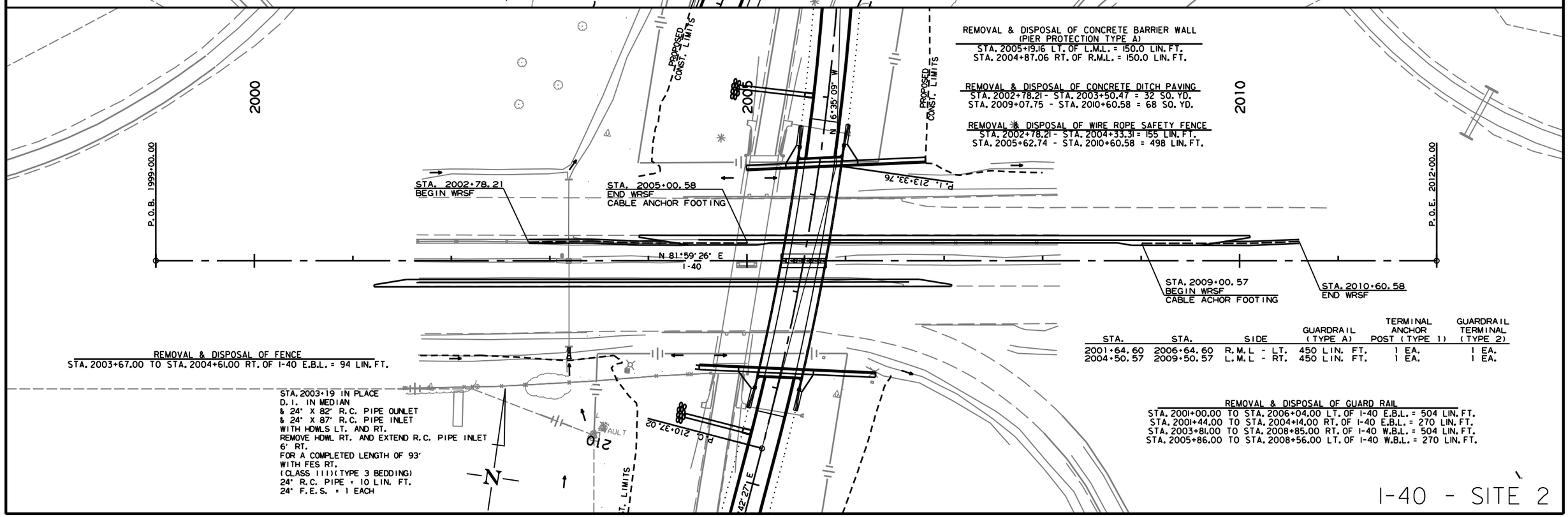

REMOVAL & DISPOSAL OF CONCRETE BARRIER WALL
(PIER PROTECTION TYPE A)
STA. 2005+19.16 LT. OF L.M.L. = 150.0 LIN. FT.
STA. 2004+87.06 RT. OF R.M.L. = 150.0 LIN. FT.

REMOVAL & DISPOSAL OF CONCRETE DITCH PAVING
STA. 2002+78.21 - STA. 2003+50.47 = 32 SQ. YD.
STA. 2009+07.75 - STA. 2010+60.58 = 68 SQ. YD.

REMOVAL & DISPOSAL OF WIRE ROPE SAFETY FENCE
STA. 2002+78.21 - STA. 2004+33.31 = 155 LIN. FT.
STA. 2005+62.74 - STA. 2010+60.58 = 498 LIN. FT.

REMOVAL & DISPOSAL OF FENCE
STA. 2003+67.00 TO STA. 2004+61.00 RT. OF I-40 E.B.L. = 94 LIN. FT.

STA. 2003+19 IN PLACE
D. I. IN MEDIAN
& 24" X 82' R.C. PIPE OUNLET
& 24" X 87' R.C. PIPE INLET
WITH HDWLS LT. AND RT.
REMOVE HDWL RT. AND EXTEND R.C. PIPE INLET
6' RT.
FOR A COMPLETED LENGTH OF 93'
WITH FES RT.
(CLASS III)(TYPE 3 BEDDING)
24" R.C. PIPE = 10 LIN. FT.
24" F.E.S. = 1 EACH

STA.	STA.	SIDE	GUARDRAIL (TYPE A)	TERMINAL ANCHOR POST (TYPE 1)	GUARDRAIL TERMINAL (TYPE 2)
2001+64.60	2006+64.60	R.M.L - LT.	450 LIN. FT.	1 EA.	1 EA.
2004+50.57	2009+50.57	L.M.L - RT.	450 LIN. FT.	1 EA.	1 EA.

REMOVAL & DISPOSAL OF GUARD RAIL
STA. 2001+00.00 TO STA. 2006+04.00 LT. OF I-40 E.B.L. = 504 LIN. FT.
STA. 2001+44.00 TO STA. 2004+14.00 RT. OF I-40 E.B.L. = 270 LIN. FT.
STA. 2003+81.00 TO STA. 2008+85.00 RT. OF I-40 W.B.L. = 504 LIN. FT.
STA. 2005+86.00 TO STA. 2008+56.00 LT. OF I-40 W.B.L. = 270 LIN. FT.

I-40 - SITE 2

MM41715 7/24/2023
R061613.DGN

DATE REVISED	DATE REVISED	FED.RD. DIST.NO.	STATE	JOB NO.	SHEET NO.	TOTAL SHEETS
		6	ARK.	061613	74	215
		SUMMARY OF TRAFFIC SIGNAL QUANTITIES				

STATE OF ARKANSAS
LICENSED PROFESSIONAL ENGINEER
No. 11425
TRINITY D. SMITH

Aug 16 2023 3:26 PM

DocuSign

SUMMARY OF TRAFFIC SIGNAL QUANTITIES

ITEM NUMBER	ITEM	HWY. 31 & I-40 RAMP	HWY. 31 & DEE DEE LANE	QUANTITY	UNIT
SP & 701	SYSTEM LOCAL CONTROLLER TS2-TYPE 2 (8 PHASES)	1	1	2	EACH
SP & 701	SYSTEM LOCAL CONTROLLER-FIBER (8 PHASES)	1	1	2	EACH
SP	LOCAL RADIO WITH ANTENNA RELOCATION	1	1	2	EACH
SP	ANTENNA CABLE (TYPE 6)	50	50	100	LIN. FT.
SP	WIC FIBER ENCLOSURE	1	1	2	EACH
SP & 706	TRAFFIC SIGNAL HEAD, LED, (3 SECTION, 1 WAY)	14	20	34	EACH
SP & 706	TRAFFIC SIGNAL HEAD, LED, (4 SECTION, 1 WAY)	2	5	7	EACH
SP	RELOCATION OF TRAFFIC SIGNAL HEAD	2	2	4	EACH
SP & 707	CENTRAL CONTROL UNIT	1	1	2	EACH
SP & 707	POLE MOUNTED ASSEMBLY	6	8	14	EACH
SP & 707	INFRARED PROGRAMMING DEVICE	1	1	2	EACH
SP & 707	COUNTDOWN PEDESTRIAN SIGNAL HEAD, LED	6	8	14	EACH
708	TRAFFIC SIGNAL CABLE (5C/14 A.W.G.)	2086	2751	4837	LIN. FT.
708	TRAFFIC SIGNAL CABLE (7C/14 A.W.G.)	955	1333	2288	LIN. FT.
708	TRAFFIC SIGNAL CABLE (20C/14 A.W.G.)	338	594	932	LIN. FT.
SP	ELECTRICAL CONDUCTORS-IN-CONDUIT (1C/8 A.W.G., E.G.C.)	768	839	1607	LIN. FT.
SP	ELECTRICAL CONDUCTORS-IN-CONDUIT (1C/12 A.W.G., E.G.C.)	210	230	440	LIN. FT.
SP	ELECTRICAL CONDUCTORS-IN-CONDUIT (2C/6 A.W.G.)	136	120	256	LIN. FT.
SP	ELECTRICAL CONDUCTORS FOR LUMINAIRES	848	824	1672	LIN. FT.
SP	COMMUNICATION CABLE, FIBER (6 CHANNEL)	2000		2000	LIN. FT.
709	GALVANIZED STEEL CONDUIT (2")	50	50	100	LIN. FT.
709	GALVANIZED STEEL CONDUIT (3")	30	30	60	LIN. FT.
710	NON-METALLIC CONDUIT (2")	1055	810	1865	LIN. FT.
710	NON-METALLIC CONDUIT (3")	492	565	1057	LIN. FT.
SS & 711	CONCRETE PULL BOX (TYPE 2)	2	2	4	EACH
SS & 711	CONCRETE PULL BOX (TYPE 3)	4	3	7	EACH
SS & 711	CONCRETE PULL BOX (TYPE 1 HD)	1	1	2	EACH
SS & 711	CONCRETE PULL BOX (TYPE 2 HD)	4	3	7	EACH
SS & 711	CONCRETE PULL BOX (TYPE 3 HD)	1	3	4	EACH
SS & 713	SPAN WIRE ASSEMBLY	1	1	2	EACH
SS & 714	TRAFFIC SIGNAL MAST ARM AND POLE WITH FOUNDATION (0')	1		1	EACH
SS & 714	TRAFFIC SIGNAL MAST ARM AND POLE WITH FOUNDATION (26')	1		1	EACH
SS & 714	TRAFFIC SIGNAL MAST ARM AND POLE WITH FOUNDATION (36')		1	1	EACH
SS & 714	TRAFFIC SIGNAL MAST ARM AND POLE WITH FOUNDATION (46')		1	1	EACH
SS & 714	TRAFFIC SIGNAL MAST ARM AND POLE WITH FOUNDATION (50')		1	1	EACH
SS & 714	TRAFFIC SIGNAL MAST ARM AND POLE WITH FOUNDATION (68')		1	1	EACH
SS & 714	TRAFFIC SIGNAL MAST ARM AND POLE WITH FOUNDATION (44'-44')	1		1	EACH
SP	LED LUMINAIRE ASSEMBLY	4	4	8	EACH
SS & 715	TRAFFIC SIGNAL PEDESTAL POLE WITH FOUNDATION	3	3	6	EACH
SP	SERVICE POINT ASSEMBLY (2 CIRCUITS)	1	1	2	EACH
SP	REMOVAL OF TRAFFIC SIGNAL EQUIPMENT	0.50	0.50	1.00	LUMP SUM
716	TREATED WOOD POLE (CLASS 2, 45')	4	4	8	EACH
SP	18" STREET NAME SIGN	2	4	6	EACH
SP	VIDEO DETECTOR ROTATION		2	2	EACH
SP & 733	VIDEO DETECTOR (IP)	6	5	11	EACH
SP & 733	HYBRID VIDEO/RADAR DETECTOR		3	3	EACH
SP & 733	VIDEO CABLE (EXTERIOR CAT 5E)	1381	1617	2998	LIN. FT.
SP & 733	VIDEO MONITOR (CLR)	2	2	4	EACH
SP & 733	CENTRAL CONTROL UNIT (8 CHANNEL)	2	2	4	EACH

DATE: 07-31-2023 FILE NAME: t061613_01.dgn

LOCATION: HIGHWAY 31
CITY: LONOKE
COUNTY: LONOKE
DISTRICT: 6 SCALE: N/A DRAWN BY: JDH

T061613_01.DGN 7/31/2023

DATE REVISED	DATE REVISED	FED.RD. DIST.NO.	STATE	JOB NO.	SHEET NO.	TOTAL SHEETS
		6	ARK.	061613	75	215
		TRAFFIC SIGNAL NOTES				

STATE OF ARKANSAS
LICENSED PROFESSIONAL
No. 11425
TRINITY D. SMITH

Aug 16 2023 3:26 PM

DocuSign

TRAFFIC SIGNAL NOTES:

1. THE TRAFFIC SIGNAL SHALL NOT BE PUT INTO OPERATION OR SWITCHED TO THE NEXT CONSTRUCTION STAGE PRIOR TO THE FOLLOWING:

   A. ALL TRAFFIC SIGNAL EQUIPMENT HAS BEEN INSTALLED ACCORDING TO THE PLANS, SPECIAL PROVISIONS, AND PROPERLY FUNCTIONAL. THIS INCLUDES BUT NOT LIMITED TO: CABINETS, PULL BOXES, JUNCTION BOXES, POLES, MAST ARMS, FOUNDATIONS, LUMINAIRES, SIGNAL HEADS, PEDESTRIAN SIGNAL HEADS, PUSH BUTTONS, DETECTION SYSTEM, CONDUITS, CONDUCTORS, CABLES, TRAFFIC CONTROLLER, CONFLICT MONITOR, COMMUNICATION SYSTEM, SERVICE POINT, AND RAILROAD INTERCONNECT SYSTEM.

   B. THE DETECTION SYSTEM SHALL BE INSTALLED, SETUP, AND CONFIGURED BY THE CONTRACTOR OR THEIR SUPPLIER PER PLANS. A TRAFFIC OPERATIONS INSPECTOR SHALL INSPECT AND PROVIDE APPROVAL IN ORDER TO PUT THE TRAFFIC SIGNAL INTO OPERATION.

   C. THE TRAFFIC CONTROLLER AND CONFLICT MONITOR SHALL BE PROGRAMMED TO OPERATE AS REQUIRED PER THE PLANS (PHASING DIAGRAM, INTERVAL CHART, AND ANY ADDITIONAL NOTES), SPECIAL PROVISIONS AND ARDOT SPECIFICATIONS.

   D. TIMING SETTINGS HAVE BEEN PROGRAMMED AND APPROVED AS REQUIRED BY ITS MANAGEMENT SECTION-MAINTENANCE DIVISION.

   E. THE TRAFFIC SIGNAL HAS BEEN INSPECTED AND APPROVED BY A TRAFFIC OPERATIONS INSPECTOR.

   F. ALL REQUIRED DOCUMENTS RELATED TO THE TRAFFIC SIGNAL EQUIPMENT, THIS INCLUDES BUT NOT LIMITED TO: TEST RESULTS, CONFIGURATION/DATA REPORTS, WARRANTIES, AND ANY OTHER DOCUMENTATION REQUIRED PER PLANS AND SPECIAL PROVISIONS.

2. CONTRACTOR SHALL NOTIFY ALL EXISTING UTILITY OWNERS BEFORE BEGINNING WORK ON THIS PROJECT.

3. TRAFFIC SIGNAL CONTRACTOR SHALL NOTIFY THE RESIDENT ENGINEER OR ASSIGNED DEPARTMENT PROJECT INSPECTOR EACH DAY PRIOR TO SIGNAL RELATED WORK. NO WORK ON TRAFFIC SIGNALS WILL BE ALLOWED OR APPROVED WITHOUT THIS PRIOR NOTIFICATION.

4. THE CONTRACTOR SHALL PERFORM ALL WORK POSSIBLE THAT WILL MINIMIZE THE TIME THAT THE TRAFFIC SIGNAL IS OUT OF OPERATION. IF, IN THE OPINION OF THE ENGINEER, TRAFFIC CONDITIONS WARRANT, THE CONTRACTOR SHALL PROVIDE FLAGMEN TO DIRECT TRAFFIC WHILE THE TRAFFIC SIGNAL IS OUT OF OPERATION.

5. ALL ELECTRICAL WORK SHALL BE PERFORMED IN ACCORDANCE WITH THE CURRENT EDITIONS OF THE NFPA 70 (CURRENT EDITION) NATIONAL ELECTRICAL CODE, NFPA 101 (CURRENT EDITION) LIFE SAFETY CODE, STATE ELECTRICAL CODE AND LOCAL ELECTRICAL CODE.

6. EXTEND GREEN EQUIPMENT GROUNDING CONDUCTOR (E.G.C.) FROM GROUND BAR AT MAIN BREAKER TO CONTROL PANEL AND TO FIRST POLE. SOLIDLY BOND E.G.C. TO GROUND LUG OF CONTROL CABINET AND TO POLE GROUND. ENSURE THAT ONLY ONE NEUTRAL-TO-GROUND BOND EXISTS IN THE SYSTEM AND THAT IT IS AT THE MAIN BREAKER.

7. ELECTRICAL SERVICE SHALL BE PROVIDED BY THE CITY/COUNTY TO A SERVICE POLE WITH EXTERNAL RAINTIGHT BREAKER (MAIN BREAKER), GALVANIZED STEEL SERVICE RISER, METER LOOP (IF REQUIRED), AND WEATHERHEAD AT A MUTUALLY ACCEPTABLE POINT WITHIN THE RIGHT-OF-WAY. IF THE SERVICE POINT IS OVER 10 FEET FROM THE CONTROLLER, THE CONTRACTOR SHALL PROVIDE AND INSTALL A SEPARATE TWO CIRCUIT EXTERNAL BREAKER (SECONDARY BREAKER) ON OR NEAR THE TRAFFIC SIGNAL CONTROLLER CABINET AND SHALL INSTALL CONDUIT, ELECTRICAL SERVICE WIRE (2c/#6 A.W.G. USE RATED, WITH GROUND TYPICAL), AND PERFORM WIRING TO TAP INTO THE CITY'S/ COUNTY'S MAIN BREAKER AS PART OF THIS CONTRACT. CONDUIT IS PAID FOR AS A SEPARATE ITEM OF THIS CONTRACT. TWO CIRCUIT BREAKERS, CONSIDERED SUBSIDIARY TO THE CONTROL EQUIPMENT, ARE NEEDED WHERE STREET LIGHTING IS INCLUDED. AS PART OF THE SIGNAL INSTALLATION, STREET LIGHTING CIRCUIT (2c/#12 A.W.G. UF RATED, TYPICAL) SHALL BE KEPT FROM THE CIRCUIT SERVING THE TRAFFIC SIGNAL CONTROL EQUIPMENT FROM THE POINT OF TIE-IN AT THE SECONDARY BREAKER PROVIDED BY THE CONTRACTOR.

8. CONTRACTOR SHALL CONNECT A SEPARATE NEUTRAL FOR EACH LOAD SWITCH REPRESENTED ON EACH SIGNAL POLE.

9. TRAFFIC CONTROLLER CABINET AND LAYOUT SHALL BE SUCH THAT IT IS NOT NECESSARY TO SHUT DOWN POWER OR REMOVE LOAD SWITCHES IN ORDER TO EASILY TEST OR MODIFY DETECTOR INPUTS TO THE CONTROLLER.

10. CONTROLLER CABINET SHALL BE WIRED SUCH THAT DURING FLASH OPERATIONS POWER TO THE LOAD SWITCHES CANNOT BACKFEED TO LOAD SWITCH POWER BUSS.

11. ALL PARTS OF THIS INSTALLATION SHALL BE IN ACCORDANCE WITH THE STANDARD SPECIFICATIONS FOR HIGHWAY CONSTRUCTION, STANDARD DRAWINGS, AND WITH THE MANUAL ON UNIFORM TRAFFIC CONTROL DEVICES, CURRENT EDITION.

12. CONTROLLER CABINET LAYOUT AND ORIENTATION SHALL CONFORM TO IMSA STANDARDS.

13. DOOR PANEL TEST PUSH BUTTONS SHALL ACTUATE INDICATED PHASES. DETECTOR ASSIGNMENTS AND/OR SIDE PANEL JUMPERS MAY REQUIRE MODIFICATION.

14. ALL SYSTEM DETECTOR RACKS AND ASSOCIATED EQUIPMENT SHALL BE PROTECTED BY THE MAIN CONTROLLER CABINET POWER SURGE PROTECTION.

15. ONE VIDEO PROGRAMMNG MODULE SHALL BE PROVIDED FOR AIMING AND SETUP OF DETECTORS IF THE VIDEO SYSTEM CANNOT BE ADJUSTED THROUGH HARDWARE AND SOFTWARE PROVIDED BY ITEMS WITHIN THE JOB.

16. HARDWARE INPUTS MAY BE DETERMINED BY SUPPLIER. EACH DETECTOR OUTPUT SHALL INPUT THE CONTROLLER THROUGH A SEPARATE INPUT UNLESS OTHERWISE NOTED AND BE PROGRAMMED TO ACTUATE THE ASSOCIATED PHASE. COMBINATION (COMB.) DETECTORS SHALL ALSO BE PROGRAMMED TO PROVIDE VEHICLE COUNT/OCCUPANCY DATA.

17. THE LOCAL RADIO WITH ANTENNA AND TRAFFIC SIGNAL CONTROLLER SHALL BE COMPATIBLE WITH THE EXISTING COORDINATION SYSTEM IN THE CITY/COUNTY.

18. CONDUIT INSTALLED UNDER ROADWAY SURFACES SHALL BE INSTALLED BY PUSHING OR BORING METHOD OR AS DIRECTED BY THE ENGINEER. PVC OR HDPE CONDUIT SHALL BE USED AND SHALL BE UL LISTED. PVC CONDUIT SHALL BE MARKED "DIR. BORING" OR "DIRECTIONAL BORING" PER NEC. IF THE ENGINEER DETERMINES THIS IS NOT FEASIBLE, THEN A TRENCHING METHOD AS SHOWN IN THE STANDARD DRAWINGS MAY BE USED. THE ENGINEER SHALL GRANT A WRITTEN APPROVAL PRIOR TO USING THE TRENCHING METHOD.

19. ALL CONDUIT SHALL BE THREE (3") INCH DIAMETER UNLESS SPECIFIED ON PLANS. ALL CONDUIT UNDER THE ROADWAY, SIDEWALKS, AND DRIVEWAYS SHALL HAVE A MINIMUM DEPTH OF 24" FROM THE TOP OF THE CONDUIT TO THE FINISHED GRADE. CONDUIT DEPTH MAY NEED TO INCREASE NEAR DRAINAGE STRUCTURES.

20. CONDUIT BELL END FITTINGS SHALL BE INSTALLED ON ALL TERMINATING ENDS OF NON-METALLIC CONDUIT RUNS. THIS INCLUDES PULL BOXES, POLE BASES, AND TRAFFIC SIGNAL CABINETS. THE COST OF THE FITTINGS SHALL BE CONSIDERED SUBSIDARY TO THE PAY ITEM. ALL NON-METALLIC CONDUIT SHALL USE LONG SWEEP 90 DEGREE ELBOWS ON ALL CONDUIT BENDS.

21. ALL CONCRETE PULL BOXES SHALL BE (TYPE 2 HD) UNLESS OTHERWISE INDICATED. PULL BOX LIDS SHALL CLOSE FLUSH WITHOUT PINCHING ANY CONDUCTORS. CONDUIT LENGTHS IN PULL BOXES SHALL BE SET ACCORDINGLY. ANY CONDUCTORS THAT HAVE BEEN DAMAGED BY PINCHING SHALL BE COMPLETELY REPLACED AT THE CONTRACTOR'S EXPENSE.

22. ALL CONCRETE PULL BOXES SHALL BE SET ON A GRAVEL OR CRUSHED STONE BEDDING AS SPECIFIED IN SECTION 711, CONCRETE PULL BOX, OF THE STANDARD SPECIFICATIONS FOR HIGHWAY CONSTRUCTION, EDITION OF 2014.

23. CONTRACTOR SHALL ATTACH A PERMANENT TAG OF RIGID PLASTIC OR NON-FERROUS METAL TO EACH CONDUIT AT PULLBOXES, POLE BASES, JUNCTION BOXES AND CONTROLLER CABINETS. TAGS SHALL BE EMBOSSED, STAMPED OR ENGRAVED WITH LETTERS 1/4" OR GREATER IN HEIGHT AND SECURED TO THE CONDUIT WITH NYLON OR PLASTIC TIES. EACH TAG SHALL INDICATE THE END LOCATION OF CONDUIT RUN. THE COST OF THE TAGS SHALL BE SUBSIDIARY TO THE CONDUIT PAY ITEM.
   EXAMPLES FOR CONDUIT IN SIDE CABINET: "TO POLE A AND B" OR "TO POLE C"
   EXAMPLES FOR CONDUIT IN PULL BOX: "TO POLE A" OR "TO TRAFFIC CABINET"

24. ALL STEEL POLES SHALL BE DESIGNED TO MEET THE AASHTO STANDARD SPECIFICATIONS FOR STRUCTURAL SUPPORTS FOR HIGHWAY SIGNS, LUMINAIRES AND TRAFFIC SIGNALS, 4th EDITION (2001) WITH 2003 AND 2006 INTERIMS.

25. ALL TRAFFIC SIGNAL POLES SHALL BE GALVANIZED.

26. CONNECTION OF TRAFFIC SIGNAL DISPLAY TO FIELD WIRING SHALL UTILIZE AN APPROVED TERMINAL STRIP BEHIND HAND-HOLE COVER AT BASE OF POLE. TERMINAL STRIP SHALL PROVIDE PROTECTION TO PREVENT EXPOSURE TO THE PUBLIC IN THE EVENT THAT POLE COVER IS MISSING. PAYMENT FOR TERMINAL STRIPS SHALL BE INCLUDED IN ITEM 714 TRAFFIC SIGNAL MAST ARM AND POLE WITH FOUNDATION OF THE STANDARD SPECIFICATIONS FOR HIGHWAY CONSTRUCTION, CURRENT EDITION.

27. FOUNDATION FOR ALL POLES SHALL BE EXTENDED IF NECESSARY TO ACCOMMODATE THE REQUIREMENTS FOR SIGNAL HEAD CLEARANCE ABOVE ROADWAY ONLY AT LOCATIONS WHERE THE GROUND ELEVATION AT THE POLE IS BELOW THE ELEVATION OF THE ROADWAY (SEE NOTES ON STANDARD DRAWING). PAYMENT WILL BE INCLUDED IN SECTION 714 TRAFFIC SIGNAL MAST ARM AND POLE WITH FOUNDATION OF THE STANDARD SPECIFICATIONS FOR HIGHWAY CONSTRUCTION, CURRENT EDITION.

28. TO DETERMINE UTILITY CLEARANCES ABOVE THE TRAFFIC SIGNAL POLE, REFER TO THE POLE SCHEDULE FOR VERTICAL SHAFT HEIGHT. WHERE THE POLE SCHEDULE INDICATES THAT A LUMINAIRE ARM WILL BE USED, THIRTY-EIGHT (38') FEET SHOULD BE USED TO DETERMINE UTILITY CLEARANCE ABOVE THE LUMINAIRE ARM. WHERE THE POLE SCHEDULE INDICATES A TRAFFIC SIGNAL POLE WITHOUT A LUMINAIRE ARM, A HEIGHT OF TWENTY-ONE (21') FEET SHOULD BE USED TO DETERMINE UTILITY CLEARANCE ABOVE THE TRAFFIC SIGNAL MAST ARM. AN ADDITIONAL SIX (6') FEET SHOULD BE USED DIRECTLY ABOVE "VIDEO DETECTOR" AT LOCATIONS SHOWN ON THE SIGNAL PLANS.

29. THE DESIRABLE MINIMUM DISTANCE FROM THE FACE OF ROADWAY CURB OR SHOULDER EDGE TO THE FACE OF NON-BREAKAWAY POLE OR OBSTRUCTION IS SIX (6') FEET. REFER TO TRAFFIC SIGNAL PLANS FOR SPECIFIC LOCATION OF POLES, CONTROLLER AND ANY OTHER NON-BREAKAWAY OBSTRUCTIONS. REFER TO "DESIGN PARAMETERS, MINIMUM CLEAR ZONE DISTANCE" FOR MINIMUM DISTANCE FROM THE EDGE OF TRAVELED WAY TO THE FACE OF A NON-BREAKAWAY POLE OR OBSTRUCTION. TRAFFIC SIGNAL POLES OR ANY OTHER NON-BREAKAWAY OBSTRUCTION SHALL NOT BE INSTALLED WITHIN THE CLEAR ZONE.

30. AS DETERMINED BY THE ENGINEER, FOUNDATION EMBEDMENT MAY BE DECREASED BY A MAXIMUM OF TWO FEET IF COMPETENT ROCK IS ENCOUNTERED PRIOR TO ACHIEVING PLAN EMBEDMENT AND AT LEAST HALF OF THE REMAINING PLAN EMBEDMENT LENGTH IS KEYED INTO COMPETENT ROCK.

31. LED LUMINAIRE ASSEMBLIES SHALL HAVE A BUG RATING OF U0.

32. BACKPLATES SHALL BE SUPPLIED FOR ALL TRAFFIC SIGNAL HEADS, REFER TO THE RETROREFLECTIVE BACKPLATES SPECIAL PROVISION FOR REQUIREMENTS.

33. PAVEMENT MARKINGS SHOWN FOR REFERENCE ONLY. SEE PERMANENT PAVEMENT MARKING DETAILS.

34. BEFORE FINAL ACCEPTANCE OF THE TRAFFIC SIGNAL, THE CONTRACTOR SHALL PROVIDE TWO (2) SETS OF LEDGER SIZE (11" X 17") AS-BUILT TRAFFIC SIGNAL PLANS TO THE MAINTENANCE AUTHORITY AND ARDOT.

DATE: 07-24-2023 FILE NAME: t061613_01.dgn

LOCATION:	HIGHWAY 31				
CITY:	LONOKE				
COUNTY:	LONOKE				
DISTRICT:	6	SCALE:	N/A	DRAWN BY:	JDH

T061613_01.DGN 7/24/2023

DATE REVISED	DATE REVISED	FED.RD. DIST.NO.	STATE	JOB NO.	SHEET NO.	TOTAL SHEETS
		6	ARK.	061613	76	215
		TRAFFIC SIGNAL STREET NAME SIGNS				

STATE OF ARKANSAS
LICENSED PROFESSIONAL ENGINEER
No. 11425
TRINITY D. SMITH

Aug 16 2023 3:26 PM

DocuSign

HIGHWAY 31 AND I-40 EASTBOUND RAMP INTERSECTION

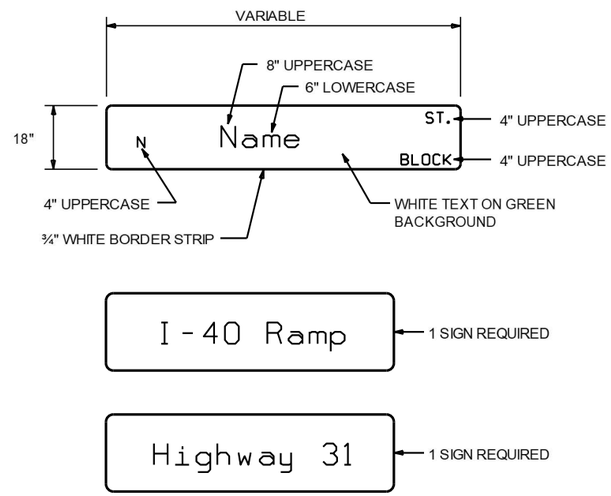

HIGHWAY 31/DEE DEE LANE AND HIGHWAY 31/BROWNSVILLE LOOP ROAD INTERSECTION

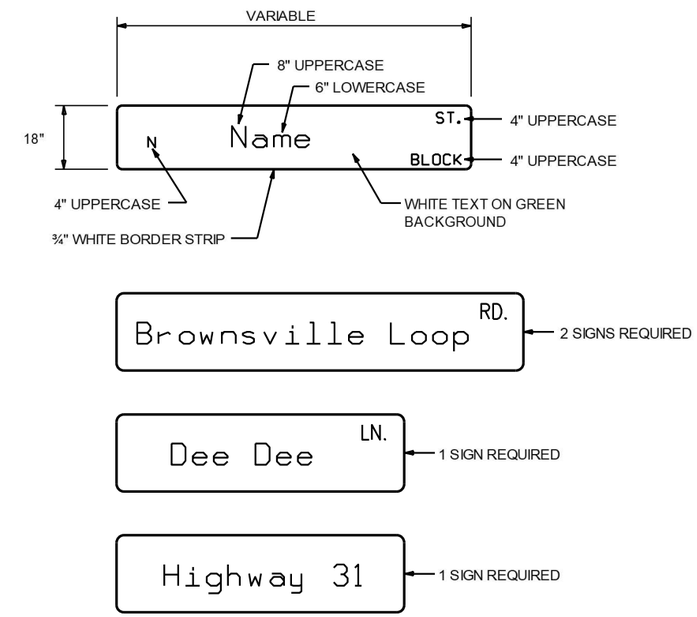

NOTES:

1. REFLECTIVE SHEETING SHALL COMPLY WITH ASTM 4956 TYPE 8 OR 9 REFLECTIVE SHEETING. SHEETING AND LEGEND SHALL BE APPLIED IN SUCH A MANNER TO PROVIDE WRINKLE AND BUBBLE FREE SURFACES. APPLICATION OF SHEETING IS CAUSE FOR REJECTION OF MATERIALS DUE TO WORKMANSHIP.
2. ALUMINUM SIGN BLANK SHALL BE ALLOY 6061-T6 OR 5052-H38. THE ALUMINUM SIGN SHALL BE ALSO ALODIZED. THE ALUMINUM SHEETING SHALL BE 0.100 INCH NOMINAL THICKNESS AND OF THE SIZE SHOWN WITH 1.5" CORNER RADII. PRIOR TO FABRICATION OF THE SIGNS, THE LAYOUT SHALL FIRST BE APPROVED BY AN AGENT OF THE CITY/ COUNTY.
3. WHEN CROSSROAD HAS TWO NAMES, THE SIGN FOR THE CROSSROAD TO THE LEFT MAY BE INSTALLED ON THE BACKSIDE OF THE MAST ARM ON THE NEARSIDE LEFT POLE. SEE STANDARD DRAWING SHEET FOR MORE INFORMATION FOR MOUNTING ON MAST ARM ASSEMBLY.
4. THE SERIES C 2000 STANDARD ALPHABET SHALL BE USED FOR ALL LETTERS.

DATE: 07-24-2023 FILE NAME: t061613_01.dgn

LOCATION:	HIGHWAY 31				
CITY:	LONOKE				
COUNTY:	LONOKE				
DISTRICT:	6	SCALE:	N/A	DRAWN BY:	JDH

T061613_01.DGN 7/24/2023

DATE REVISED	DATE REVISED	FED.RD. DIST.NO.	STATE	JOB NO.	SHEET NO.	TOTAL SHEETS
		6	ARK.	061613	77	215
		GROUNDING ARRAY DETAIL				

GROUNDING ARRAY
SINGLE-PORT FUSION WELDS

STATE OF ARKANSAS
LICENSED PROFESSIONAL ENGINEER
No. 11425
TRINITY D. SMITH

Aug 16 2023 3:26 PM

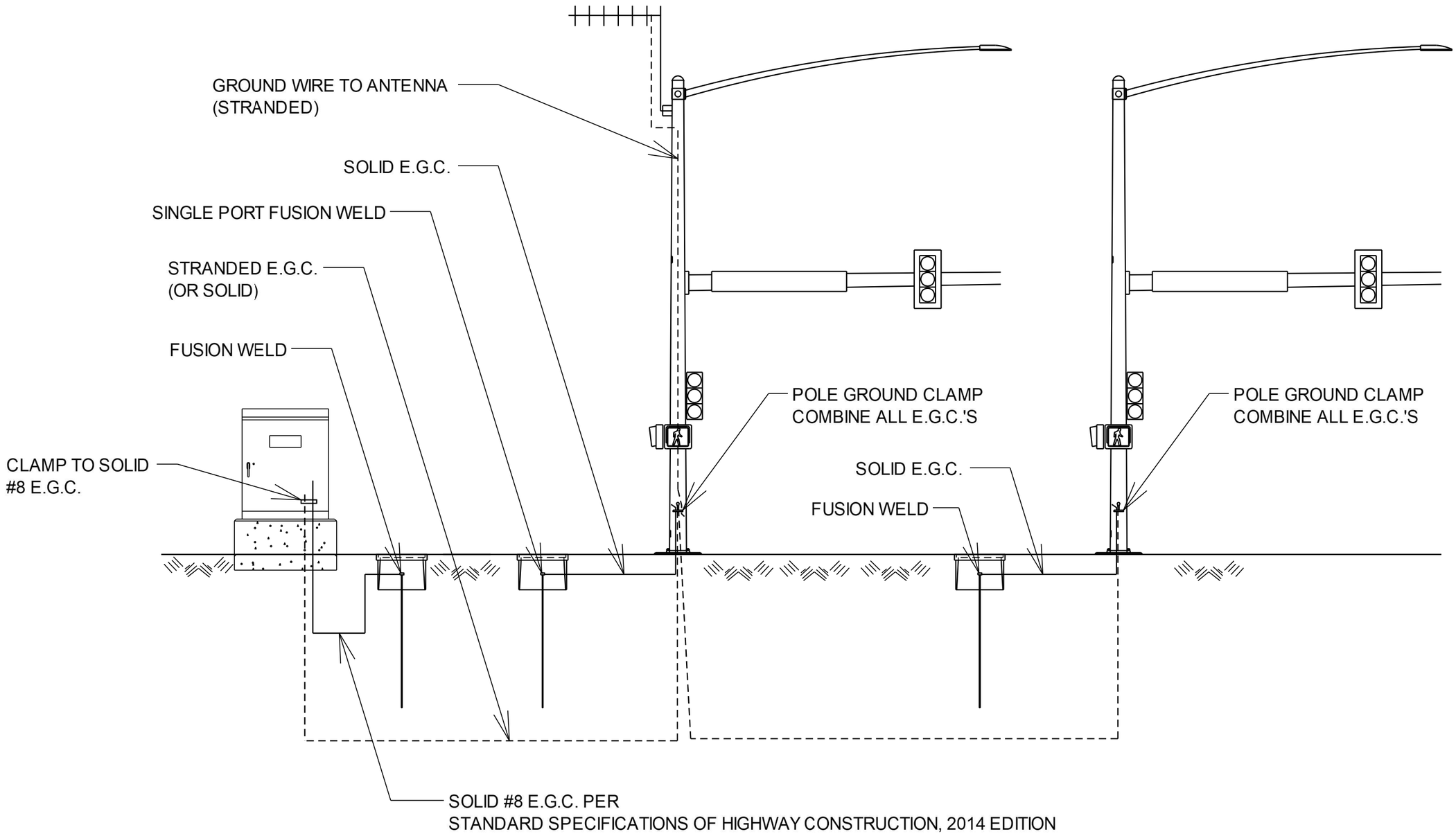

T061613_01.DGN 7/24/2023

DATE: 07-24-2023 FILE NAME: t061613_01.dgn

LOCATION: HIGHWAY 31
CITY: LONOKE
COUNTY: LONOKE
DISTRICT: 6 SCALE: N/A DRAWN BY: JDH

DATE REVISED	DATE REVISED	FED.RD. DIST.NO.	STATE	JOB NO.	SHEET NO.	TOTAL SHEETS
		6	ARK.	061613	78	215
		PEDESTRIAN PUSHBUTTON PEDESTAL DETAIL				

STATE OF ARKANSAS
LICENSED PROFESSIONAL ENGINEER
No. 11425
TRINITY D. SMITH

Aug 16 2023 3:26 PM

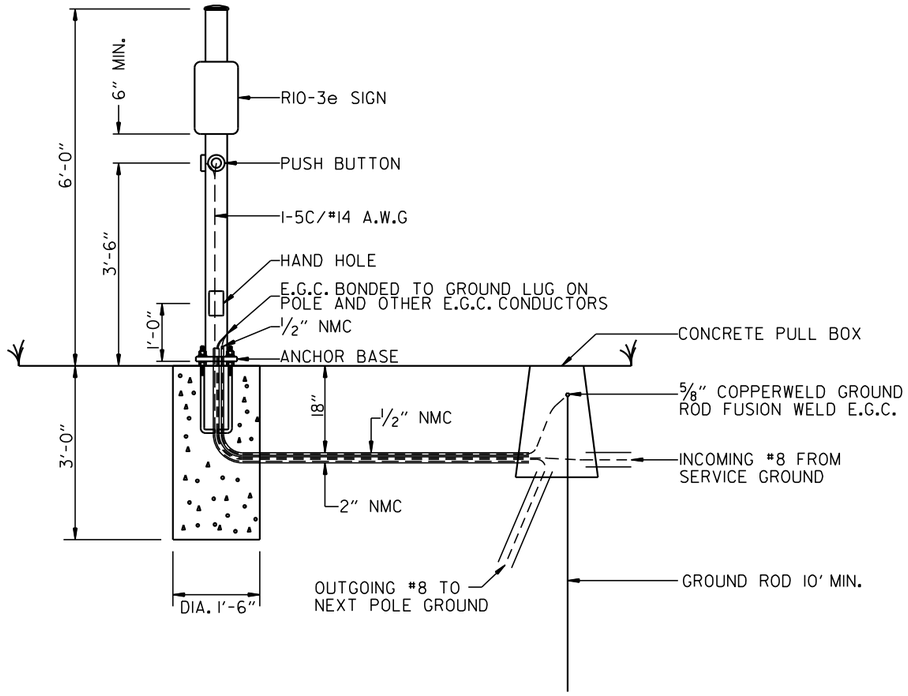

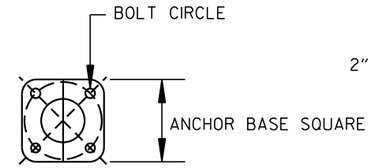

ANCHOR BASE
N.T.S.

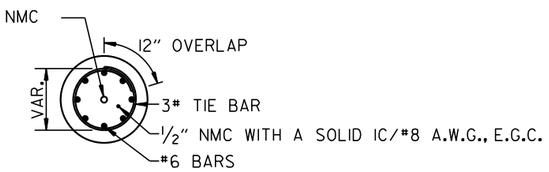

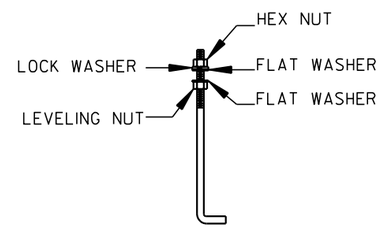

ANCHOR BOLT
N.T.S.

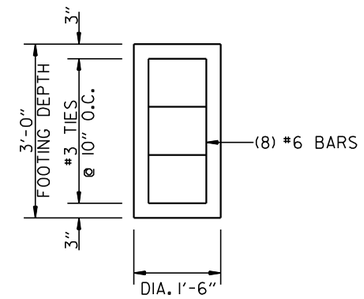

PEDESTRIAN PUSH BUTTON PEDESTAL DETAIL

NOTES:

EACH PEDESTRIAN PUSH BUTTON SHALL HAVE ONE R10-3E SIGN ATTACHED TO THE POLE ABOVE THE BUTTON. ALL SIGNS SHALL BE MANUFACTURED IN ACCORDANCE WITH SECTION 723 OF THE STANDARD SPECIFICATIONS FOR HIGHWAY CONSTRUCTION.

ALL SIGN BLANKS SHALL BE CONSTRUCTED OF ALUMINUM ALLOY (ASTM DESIGNATION B-209. ALLOY 5052-H38) WITH THICKNESS OF 0.100 INCH.

MINIMUM STRUCTURAL REQUIREMENTS:
DESIGN SPECIFICATIONS: AASHTO STANDARD SPECIFICATIONS FOR STRUCTURAL SUPPORTS FOR HIGHWAY SIGNS, LUMINAIRES AND TRAFFIC SIGNALS, 4TH EDITION (2001) WITH 2003 AND 2006 INTERIMS.

CONSTRUCTION SPECIFICATIONS:
STANDARD SPECIFICATIONS FOR HIGHWAY CONSTRUCTION (CURRENT EDITION) WITH APPLICABLE SUPPLEMENTAL SPECIFICATIONS AND SPECIAL PROVISIONS.

POLE CAP - POLE CAPS SHALL BE PROVIDED, FABRICATED OF EITHER STEEL OR CAST ALUMINUM.

HAND HOLE - HAND HOLES SHALL BE 3 IN. X 5 IN. FOR PED POLES. MINIMUM PLACED APPROXIMATELY 12 INCHES FROM BASE, AND SHALL BE FIXED WITH A BOLT DOWN COVER. A VACUUM FORMED ABS COVER IS AN ACCEPTABLE ALTERNATE TO STEEL.

NUT COVERS - EACH POLE SHALL INCLUDE A BOLT DOWN NUT COVER FOR EACH ANCHOR BOLT.

GROUND ROD - A 10' X 5/8" GROUND ROD SHALL BE INSTALLED IN THE CONCRETE PULL BOX FOR EACH POLE AND THE CONTROLLER. PAYMENT FOR THE GROUND ROD AND 1/2" NMC SHALL BE INCLUDED IN ITEM 714 FOR SIGNAL POLES AND ITEM 701 FOR THE CONTROLLER. THE CONCRETE PULL BOX AND CONDUCTOR BOX SHALL BE PAID SEPARATELY.

POLE BASE/FOUNDATION - ANCHOR BOLTS SHALL INCLUDE AS A MINIMUM, ONE LEVELING NUT, TWO FLAT WASHERS, ONE LOCK WASHER, AND ONE HEX NUT. PERIMETER OF ANCHOR BASE SHALL BE GROUTED WITH A 1/4" WEEP HOLE. ALL CONCRETE SHALL BE CLASS "S" OR GREATER.

CONCRETE - ALL CONCRETE POLE FOUNDATION SHALL BE CLASS "S" OR GREATER.

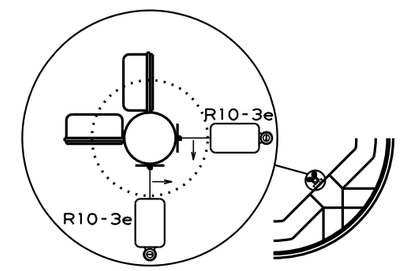

TYPICAL MOUNTING PUSH BUTTON ON SIGNAL POLE

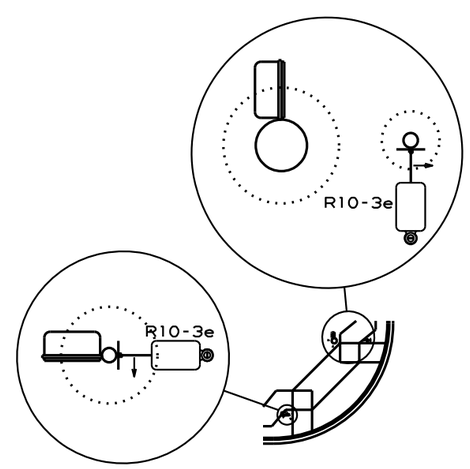

TYPICAL MOUNTING PUSH BUTTON ON PEDESTRIAN POLE AND PEDESTRIAN PUSH BUTTON POLE

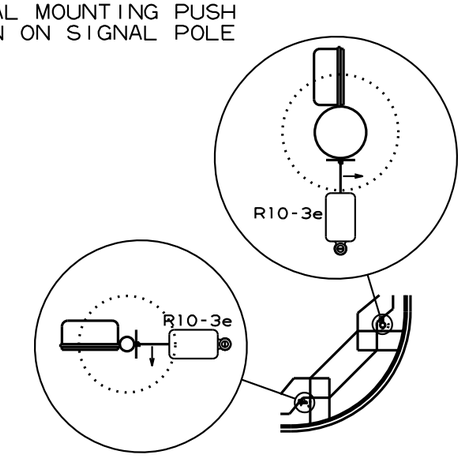

TYPICAL MOUNTING PUSH BUTTON ON PEDESTRIAN POLE AND SIGNAL POLE

DATE: 07-31-2023 FILE NAME: t061613_01.dgn

LOCATION: HIGHWAY 31
CITY: LONOKE
COUNTY: LONOKE
DISTRICT: 6 SCALE: N/A DRAWN BY: JDH

T061613_01.DGN 7/31/2023

DATE REVISED	DATE REVISED	FED.RD. DIST.NO.	STATE	JOB NO.	SHEET NO.	TOTAL SHEETS
		6	ARK.	061613	79	215
		TRAFFIC SIGNAL QUANTITIES - I-40 EB RAMP				

STATE OF ARKANSAS
LICENSED PROFESSIONAL ENGINEER
No. 11425
TRINITY D. SMITH

Aug 16 2023 3:27 PM

DocuSign

STAGE 1 TRAFFIC SIGNAL QUANTITIES

ITEM NUMBER	ITEM	QUANTITY	UNIT
SP & 701	SYSTEM LOCAL CONTROLLER TS2-TYPE 2 (8 PHASES)	1	EACH
SP	LOCAL RADIO WITH ANTENNA RELOCATION	1	EACH
SP	ANTENNA CABLE (TYPE 6)	50	LIN. FT.
SP & 706	TRAFFIC SIGNAL HEAD, LED, (3 SECTION, 1 WAY)	7	EACH
SP & 706	TRAFFIC SIGNAL HEAD, LED, (4 SECTION, 1 WAY)	1	EACH
708	TRAFFIC SIGNAL CABLE (5C/14 A.W.G.)	143	LIN. FT.
708	TRAFFIC SIGNAL CABLE (7C/14 A.W.G.)	900	LIN. FT.
SP	ELECTRICAL CONDUCTORS-IN-CONDUIT (1C/8 A.W.G., E.G.C.)	101	LIN. FT.
SP	ELECTRICAL CONDUCTORS-IN-CONDUIT (2C/6 A.W.G.)	59	LIN. FT.
709	GALVANIZED STEEL CONDUIT (2")	50	LIN. FT.
709	GALVANIZED STEEL CONDUIT (3")	30	LIN. FT.
710	NON-METALLIC CONDUIT (2")	55	LIN. FT.
710	NON-METALLIC CONDUIT (3")	6	LIN. FT.
SS & 711	CONCRETE PULL BOX (TYPE 1 HD)	1	EACH
SS & 713	SPAN WIRE ASSEMBLY	1	EACH
SP	SERVICE POINT ASSEMBLY (2 CIRCUITS)	1	EACH
SP	REMOVAL OF TRAFFIC SIGNAL EQUIPMENT	0.25	LUMP SUM
716	TREATED WOOD POLE (CLASS 2, 45')	4	EACH
SP & 733	VIDEO DETECTOR (IP)	3	EACH
SP & 733	VIDEO CABLE (EXTERIOR CAT 5E)	601	LIN. FT.
SP & 733	VIDEO MONITOR (CLR)	1	EACH
SP & 733	CENTRAL CONTROL UNIT (8 CHANNEL)	1	EACH

STAGE 1:
THE EXISTING ANTENNA AND RADIO SHALL BE RELOCATED AS SHOWN ON THE PLANS AND UTILIZED DURING STAGE CONSTRUCTION. INSTALL ALL TEMPORARY TRAFFIC SIGNAL, INCLUDING THE PERMANENT SERVICE POINT ASSEMBLY (2 CIRCUITS) WITH ALL ASSOCIATED ITEMS AS SHOWN ON THE STAGE 1 TEMPORARY TRAFFIC SIGNAL PLANS AND REMOVE ALL EXISTING TRAFFIC SIGNAL EQUIPMENT.
MAINTAIN THIS TRAFFIC SIGNAL CONFIGURATION AS SHOWN ON THE STAGE 1 TRAFFIC SIGNAL PLANS.
(REFER TO MAINTENANCE OF TRAFFIC DETAILS.)

STAGE 2 TRAFFIC SIGNAL QUANTITIES

ITEM NUMBER	ITEM	QUANTITY	UNIT
SP	RELOCATION OF TRAFFIC SIGNAL HEAD	2	EACH

STAGE 2:
RELOCATE SIGNAL HEADS 4 & 5 AS SHOWN ON THE PLANS.
MAINTAIN THIS TRAFFIC SIGNAL CONFIGURATION AS SHOWN ON THE STAGE 2 TRAFFIC SIGNAL PLANS.
(REFER TO MAINTENANCE OF TRAFFIC DETAILS.)

PERMANENT TRAFFIC SIGNAL QUANTITIES

ITEM NUMBER	ITEM	QUANTITY	UNIT
SP & 701	SYSTEM LOCAL CONTROLLER-FIBER (8 PHASES)	1	EACH
SP	WIC FIBER ENCLOSURE	1	EACH
SP & 706	TRAFFIC SIGNAL HEAD, LED, (3 SECTION, 1 WAY)	7	EACH
SP & 706	TRAFFIC SIGNAL HEAD, LED, (4 SECTION, 1 WAY)	1	EACH
SP & 707	CENTRAL CONTROL UNIT	1	EACH
SP & 707	POLE MOUNTED ASSEMBLY	6	EACH
SP & 707	INFRARED PROGRAMMING DEVICE	1	EACH
SP & 707	COUNTDOWN PEDESTRIAN SIGNAL HEAD, LED	6	EACH
708	TRAFFIC SIGNAL CABLE (5C/14 A.W.G.)	1943	LIN. FT.
708	TRAFFIC SIGNAL CABLE (7C/14 A.W.G.)	55	LIN. FT.
708	TRAFFIC SIGNAL CABLE (20C/14 A.W.G.)	338	LIN. FT.
SP	ELECTRICAL CONDUCTORS-IN-CONDUIT (1C/8 A.W.G., E.G.C.)	667	LIN. FT.
SP	ELECTRICAL CONDUCTORS-IN-CONDUIT (1C/12 A.W.G., E.G.C.)	210	LIN. FT.
SP	ELECTRICAL CONDUCTORS-IN-CONDUIT (2C/6 A.W.G.)	77	LIN. FT.
SP	ELECTRICAL CONDUCTORS FOR LUMINAIRES	848	LIN. FT.
SP	COMMUNICATION CABLE, FIBER (6 CHANNEL)	2000	LIN. FT.
710	NON-METALLIC CONDUIT (2")	1000	LIN. FT.
710	NON-METALLIC CONDUIT (3")	486	LIN. FT.
SS & 711	CONCRETE PULL BOX (TYPE 2)	2	EACH
SS & 711	CONCRETE PULL BOX (TYPE 3)	4	EACH
SS & 711	CONCRETE PULL BOX (TYPE 2 HD)	4	EACH
SS & 711	CONCRETE PULL BOX (TYPE 3 HD)	1	EACH
SS & 714	TRAFFIC SIGNAL MAST ARM AND POLE WITH FOUNDATION (0')	1	EACH
SS & 714	TRAFFIC SIGNAL MAST ARM AND POLE WITH FOUNDATION (26')	1	EACH
SS & 714	TRAFFIC SIGNAL MAST ARM AND POLE WITH FOUNDATION (44'-44')	1	EACH
SP	LED LUMINAIRE ASSEMBLY	4	EACH
SS & 715	TRAFFIC SIGNAL PEDESTAL POLE WITH FOUNDATION	3	EACH
SP	REMOVAL OF TRAFFIC SIGNAL EQUIPMENT	0.25	LUMP SUM
SP	18" STREET NAME SIGN	2	EACH
SP & 733	VIDEO DETECTOR (IP)	3	EACH
SP & 733	VIDEO CABLE (EXTERIOR CAT 5E)	780	LIN. FT.
SP & 733	VIDEO MONITOR (CLR)	1	EACH
SP & 733	CENTRAL CONTROL UNIT (8 CHANNEL)	1	EACH

PERMANENT TRAFFIC SIGNAL:
THE TEMPORARY TRAFFIC SIGNAL FOR STAGE 2 SHALL REMAIN IN OPERATION UNTIL THE PERMANENT TRAFFIC SIGNAL IS COMPLETED AND OPERATIONAL. INSTALL THE PERMANENT TRAFFIC SIGNAL WITH ALL ASSOCIATED EQUIPMENT. UTILIZE THE SERVICE POINT ASSEMBLY (2 CIRCUITS) INSTALLED IN STAGE 1, AND REMOVE THE TEMPORARY TRAFFIC SIGNAL AND COMPONENTS THAT WERE IN USE FOR STAGE 2.
INSTALL COMMUNICATION CABLE, FIBER (6 CHANNEL) FROM THE CONTROLLER CABINET TO THE CONTROLLER CABINET LOCATED AT THE INTERSECTION OF HWY. 31 AND DEE DEE LANE/BROWNSVILLE LOOP ROAD, STATION 119+64.31. QUANTITIES FOR THE COMMUNICATION CABLE, FIBER (6 CHANNEL) ARE SHOWN ABOVE.
(REFER TO PERMANENT TRAFFIC SIGNAL PLANS.)

DATE: 07-31-2023 FILE NAME: t061613_01.dgn

LOCATION: I-40 EASTBOUND RAMP AND HIGHWAY 31
CITY: LONOKE
COUNTY: LONOKE
DISTRICT: 6 SCALE: N/A DRAWN BY: JDH

T061613_01.DGN 7/24/2023

DATE REVISED	DATE REVISED	FED.RD. DIST.NO.	STATE	JOB NO.	SHEET NO.	TOTAL SHEETS
		6	ARK.	061613	80	215
		SIGNALIZATION PLAN SHEET				

STATE OF ARKANSAS
LICENSED PROFESSIONAL ENGINEER
No. 11425
TRINITY D. SMITH

Aug 16 2023 3:27 PM

DocuSign

STAGES 1 & 2 PHASING DIAGRAM

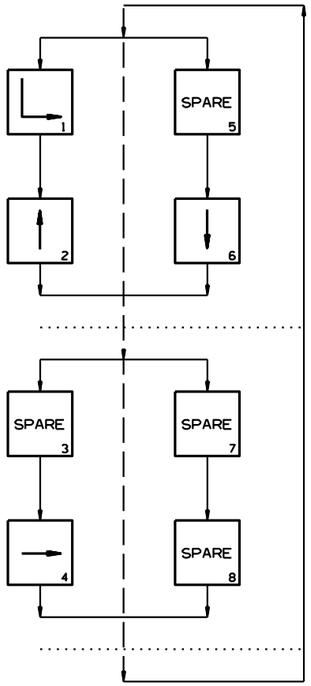

STAGES 1 & 2 SIGNAL FACES

12" LENSES

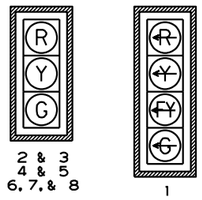

NOTES:
1. ALL SIGNAL HEADS SHALL HAVE BACKPLATES.
2. REFER TO SPECIAL PROVISION "RETROREFLECTIVE BACKPLATES" FOR DETAILS ON REQUIREMENTS FOR BACKPLATES.

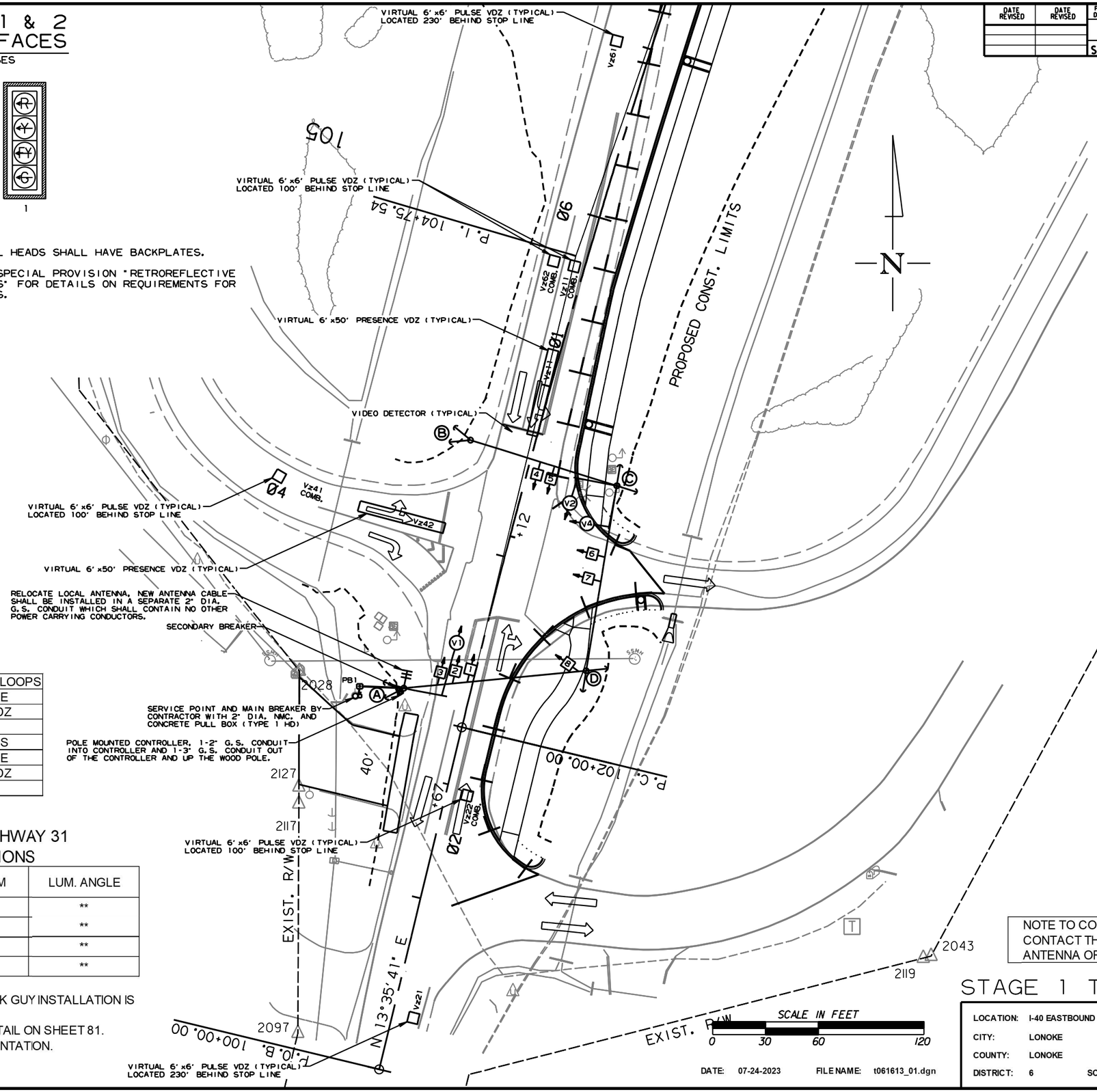

NOTE TO CONTRACTOR:
CONTACT THE CITY OF LONOKE FOR ANTENNA ORIENTATION.

DETECTOR SPACING CHART

ARDOT I-40 EASTBOUND RAMP MAIN LANE VIRTUAL LOOPS		
POSTED SPEED	DISTANCE FROM STOP LINE	
	LEAD VDZ	LAG VDZ
30 MPH	100'	N/A
ARDOT HIGHWAY 31 MAIN LANE VIRTUAL LOOPS		
POSTED SPEED	DISTANCE FROM STOP LINE	
	LEAD VDZ	LAG VDZ
40 MPH	230'	100'

I-40 EASTBOUND RAMP AND HIGHWAY 31 TEMPORARY POLE DIMENSIONS

POLE	CLASS	HEIGHT	* LUM. ARM	LUM. ANGLE
A	2	45'	25'	**
B	2	45'	N/A	**
C	2	45'	25'/25'	**
D	2	45'	N/A	**

ALL POLES ARE TREATED WOOD POLES.
STANDARD GUY INSTALLATION (TYPICAL), IF SIDEWALK GUY INSTALLATION IS NECESSARY SEE STANDARD DRAWING SD-7.
* SEE TYPICAL WOOD POLE WITH LUMINAIRE ARM DETAIL ON SHEET 81.
** REFER TO PLAN SHEETS FOR LUMINAIRE ARM ORIENTATION.

STAGE 1 TRAFFIC SIGNAL

LOCATION: I-40 EASTBOUND RAMP AND HIGHWAY 31
CITY: LONOKE
COUNTY: LONOKE
DISTRICT: 6 SCALE: 1" = 60' DRAWN BY: JDH

DATE: 07-24-2023 FILE NAME: t061613_01.dgn

T061613_01.DGN 7/24/2023

DATE REVISED	DATE REVISED	FED.RD. DIST.NO.	STATE	JOB NO.	SHEET NO.	TOTAL SHEETS
		6	ARK.	061613	81	215
		SIGNALIZATION PLAN SHEET				

STATE OF ARKANSAS
LICENSED PROFESSIONAL ENGINEER
No. 11425
TRINITY D. SMITH

Aug 16 2023 3:27 PM

DocuSign

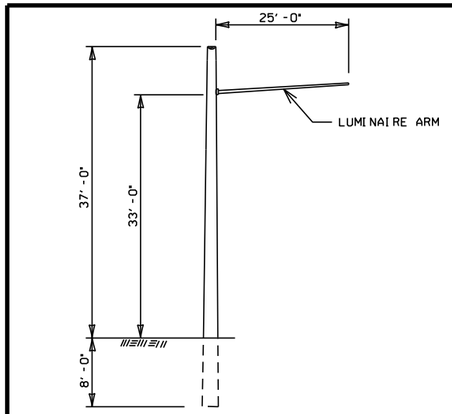

TYPICAL WOOD POLE WITH LUMINAIRE ARM

NOTE TO CONTRACTOR:
LUMINAIRE ARMS (OR APPROVED MOUNTING HARDWARE) SHALL BE USED TO MOUNT VIDEO DETECTORS. LUMINAIRE ARM SHALL NOT INCLUDE LUMINAIRE ASSEMBLIES. THE COST FOR LUMINAIRE ARMS, MOUNTING, AND ALL HARDWARE IS INCLUDED IN PRICE BID FOR ITEM 716 TREATED WOOD POLE.

GUY WIRE DETAIL FOR POLES A & B

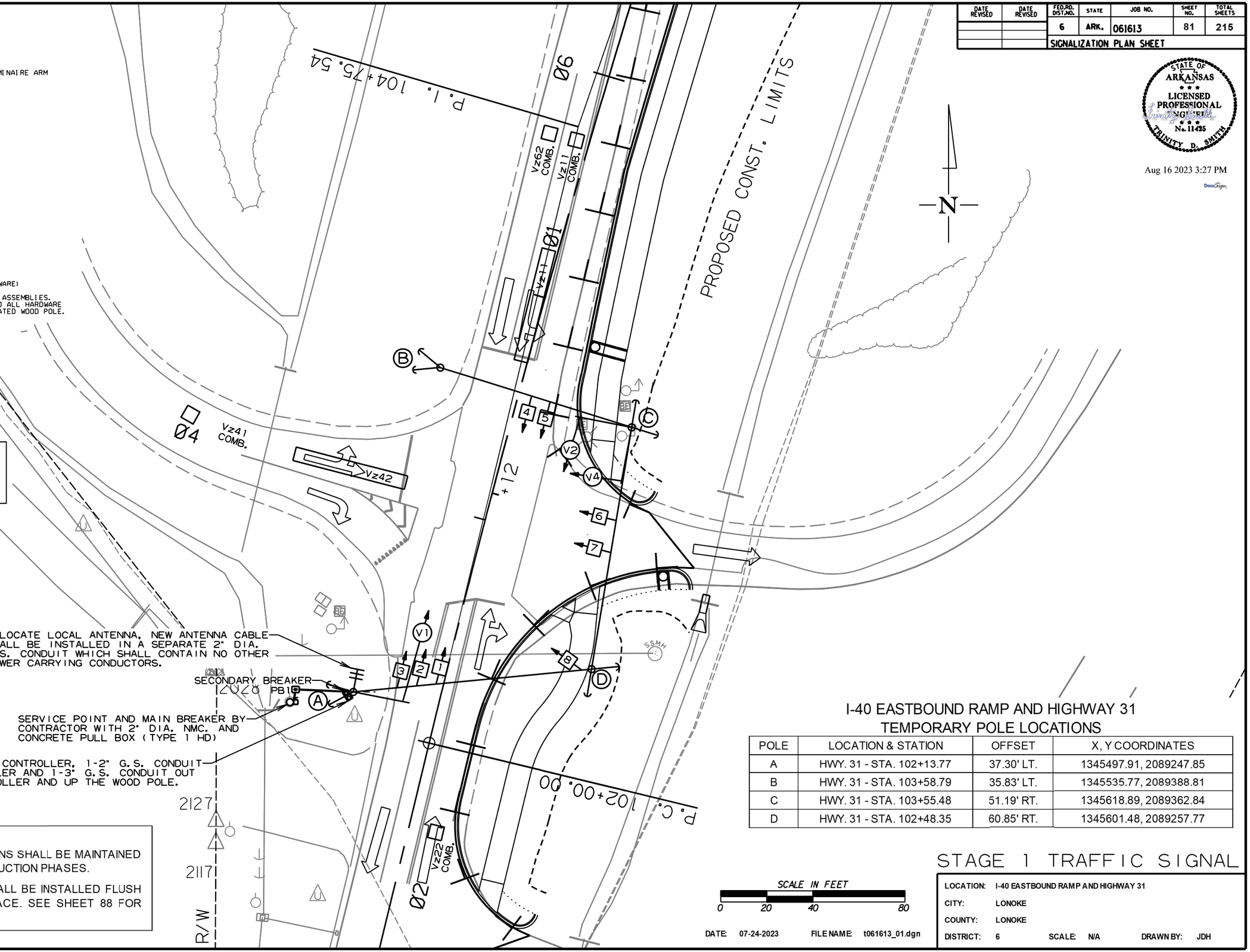

I-40 EASTBOUND RAMP AND HIGHWAY 31
TEMPORARY POLE LOCATIONS

POLE	LOCATION & STATION	OFFSET	X, Y COORDINATES
A	HWY. 31 - STA. 102+13.77	37.30' LT.	1345497.91, 2089247.85
B	HWY. 31 - STA. 103+58.79	35.83' LT.	1345535.77, 2089388.81
C	HWY. 31 - STA. 103+55.48	51.19' RT.	1345618.89, 2089362.84
D	HWY. 31 - STA. 102+48.35	60.85' RT.	1345601.48, 2089257.77

NOTES TO CONTRACTOR:

1. TRAFFIC SIGNAL OPERATIONS SHALL BE MAINTAINED THROUGHOUT ALL CONSTRUCTION PHASES.
2. THE TOP OF PULL BOX SHALL BE INSTALLED FLUSH WITH THE EXISTING SURFACE. SEE SHEET 88 FOR PB1 LOCATION.

SCALE IN FEET
0 20 40 80

DATE: 07-24-2023 FILE NAME: t061613_01.dgn

STAGE 1 TRAFFIC SIGNAL

LOCATION: I-40 EASTBOUND RAMP AND HIGHWAY 31
CITY: LONOKE
COUNTY: LONOKE
DISTRICT: 6 SCALE: N/A DRAWN BY: JDH

T061613_01.DGN 7/24/2023

DATE REVISED	DATE REVISED	FED.RD. DIST.NO.	STATE	JOB NO.	SHEET NO.	TOTAL SHEETS
		6	ARK.	061613	82	215
		SIGNALIZATION PLAN SHEET				

STATE OF ARKANSAS
LICENSED PROFESSIONAL ENGINEER
No. 11425
TRINITY D. SMITH

Aug 16 2023 3:27 PM

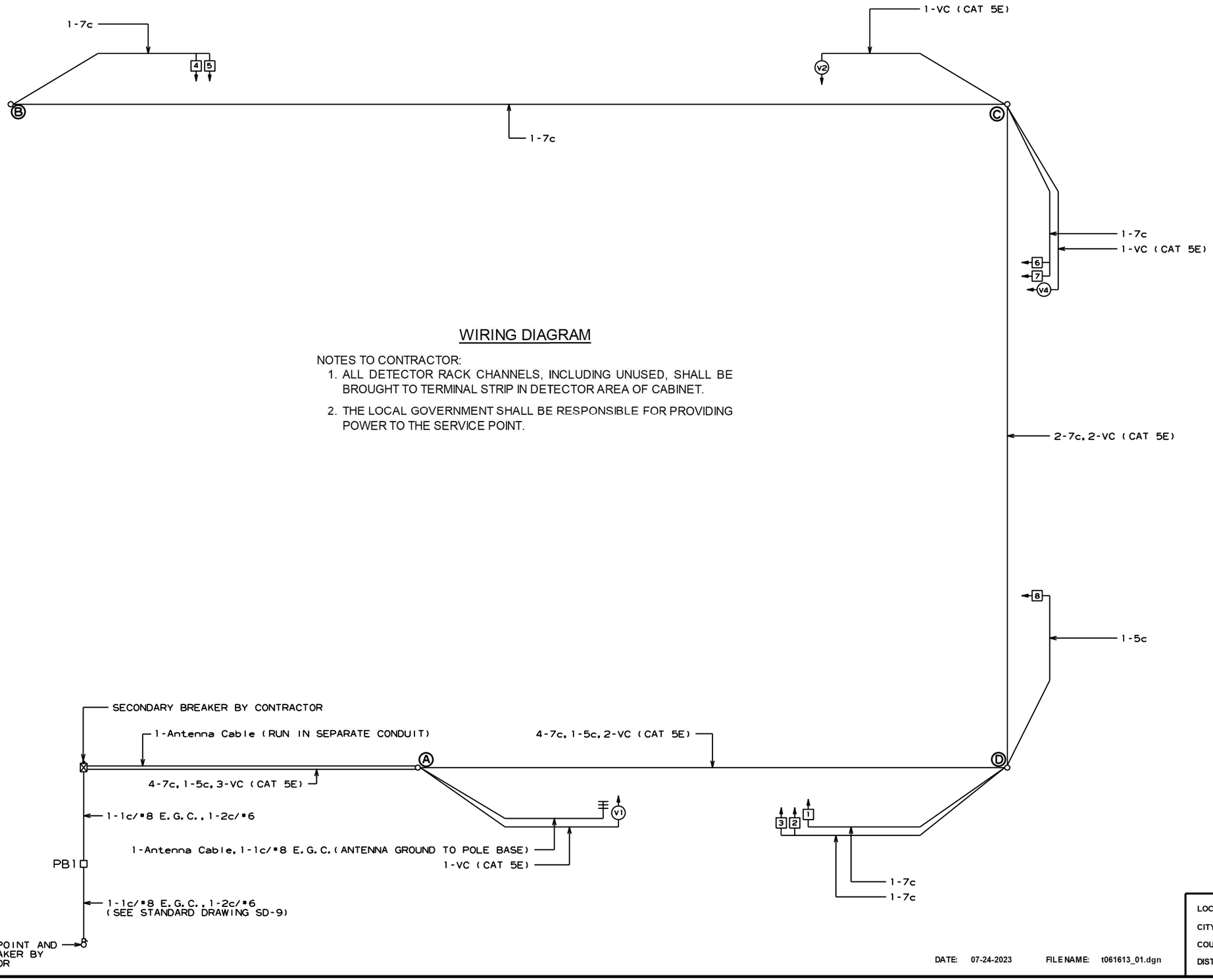

WIRING DIAGRAM

NOTES TO CONTRACTOR:

1. ALL DETECTOR RACK CHANNELS, INCLUDING UNUSED, SHALL BE BROUGHT TO TERMINAL STRIP IN DETECTOR AREA OF CABINET.
2. THE LOCAL GOVERNMENT SHALL BE RESPONSIBLE FOR PROVIDING POWER TO THE SERVICE POINT.

DATE: 07-24-2023 FILE NAME: t061613_01.dgn

LOCATION: I-40 EASTBOUND RAMP AND HIGHWAY 31
CITY: LONOKE
COUNTY: LONOKE
DISTRICT: 6 SCALE: 1" = 40' DRAWN BY: JDH

T061613_01.DGN 7/24/2023

DATE REVISED	DATE REVISED	FED.RD. DIST.NO.	STATE	JOB NO.	SHEET NO.	TOTAL SHEETS
		6	ARK.	061613	83	215
		SIGNALIZATION PLAN SHEET				

STATE OF ARKANSAS
LICENSED PROFESSIONAL ENGINEER
No. 11425
TRINITY D. SMITH

Aug 16 2023 3:27 PM

DocuSign

STAGES 1 & 2 PHASING DIAGRAM

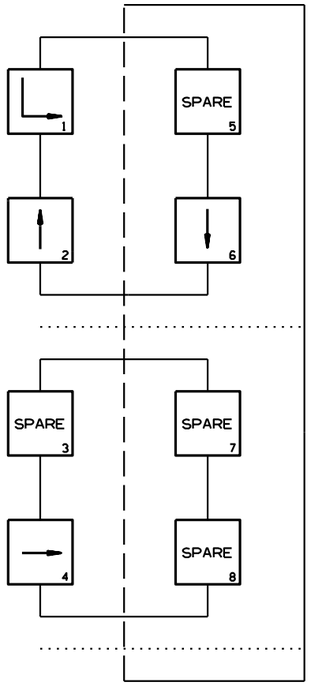

STAGES 1 & 2 SIGNAL FACES

12" LENSES

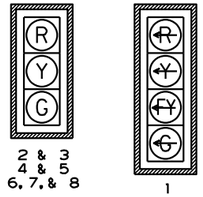

NOTES:
1. ALL SIGNAL HEADS SHALL HAVE BACKPLATES.
2. REFER TO SPECIAL PROVISION "RETROREFLECTIVE BACKPLATES" FOR DETAILS ON REQUIREMENTS FOR BACKPLATES.

STAGES 1 & 2 DETECTOR CHART

DETECTOR SYSTEM DESCRIPTION: JOB 061613											
I-40 EASTBOUND RAMP AND HIGHWAY 31 DETECTOR ASSIGNMENTS				HARDWARE INPUTS BY SUPPLIER			PROGRAM ASSIGNMENTS			COMMENTS	TUBE LENGTHS
							LOCAL		MASTER SYSTEM DETECTOR NUMBERS		
DET. ID #	LOCATION DIRECTION	TYPE	DET. #	CAB. TRM. #	AMP CHN. #	CON. IMP. #	PHS	SYSTEM DET. #			
Vz11	SB LEFT TURN FAR	COMB.			1	V9	1	1		CAMERA V1	23"
Vz12	SB LEFT TURN	LOCAL			2	V1	1			CAMERA V1	23"
Vz21	NB ADVANCE	LOCAL			5	V2	2			CAMERA V2	23"
Vz22	NB NEAR	COMB.			6	V10	2	2		CAMERA V2	23"
Vz41	EB ADVANCE	LOCAL			9	V4	4			CAMERA V4	23"
Vz42	EB NEAR	COMB.			10	V12	4	4		CAMERA V4	23"
Vz61	SB ADVANCE	LOCAL			3	V6	6			CAMERA V1	23"
Vz62	SB NEAR	COMB.			4	V14	6	6		CAMERA V1	23"
					SPARE: 7, 8, 11-16						

CONTROLLER INPUT ABBREVIATIONS:
V = VEHICLE INPUT
D = SYSTEM OR AUXILIARY INPUT
P = PEDESTRIAN INPUT

NOTE: "AMP CHN =" REFERS TO THE RACK OUTPUT POSITION.
THIS IS WIRED TO CONTROLLER INPUT DETECTOR NUMBER WHICH IS PROGRAMMED TO ACTUATE THE DESIGNATED PHASE.
EXAMPLE: V9 = SYSTEM DETECTOR 1, V10 = SYSTEM DETECTOR 2

STAGES 1 & 2 INTERVAL CHART

SIGNAL FACES	I-40 EASTBOUND RAMP AND HIGHWAY 31 1+6	CLR.	2+6	CLR.	4	CLR.	FLASH SEQUENCE
1	~~← G~~	Y	~~← FY~~	***	~~← R~~	~~← R~~	~~← R~~
2 & 3	G	**	G	**	R	R	R
4 & 5	R	R	G	Y	R	R	R
6 & 7	R	R	R	R	G	Y	R

* DENOTES GREEN OR YELLOW ARROW DEPENDING ON NEXT PHASE
** DENOTES GREEN OR YELLOW BALL DEPENDING ON NEXT PHASE
*** DENOTES FLASHING YELLOW ARROW OR YELLOW ARROW DEPENDING ON NEXT PHASE

DATE: 07-24-2023 FILE NAME: t061613_01.dgn

LOCATION: I-40 EASTBOUND RAMP AND HIGHWAY 31
CITY: LONOKE
COUNTY: LONOKE
DISTRICT: 6 SCALE: 1" = 40' DRAWN BY: JDH

T061613_01.DGN 7/24/2023

DATE REVISED	DATE REVISED	FED.RD. DIST.NO.	STATE	JOB NO.	SHEET NO.	TOTAL SHEETS
		6	ARK.	061613	84	215
		SIGNALIZATION PLAN SHEET				

STATE OF ARKANSAS
LICENSED PROFESSIONAL ENGINEER
No. 11425
TRINITY D. SMITH

Aug 16 2023 3:28 PM

DocuSign

STAGES 1 & 2 PHASING DIAGRAM

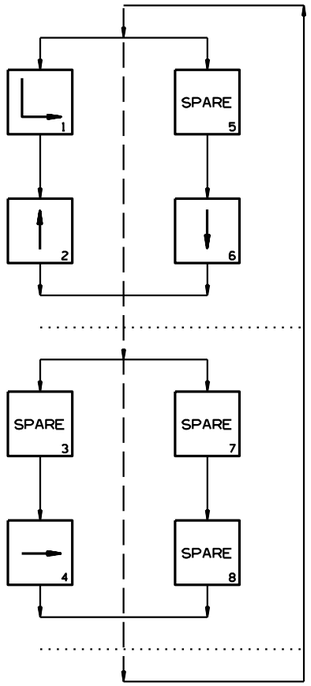

STAGES 1 & 2 SIGNAL FACES

12" LENSES

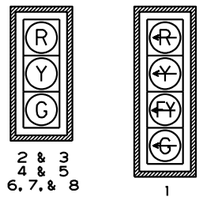

NOTES:
1. ALL SIGNAL HEADS SHALL HAVE BACKPLATES.
2. REFER TO SPECIAL PROVISION "RETROREFLECTIVE BACKPLATES" FOR DETAILS ON REQUIREMENTS FOR BACKPLATES.

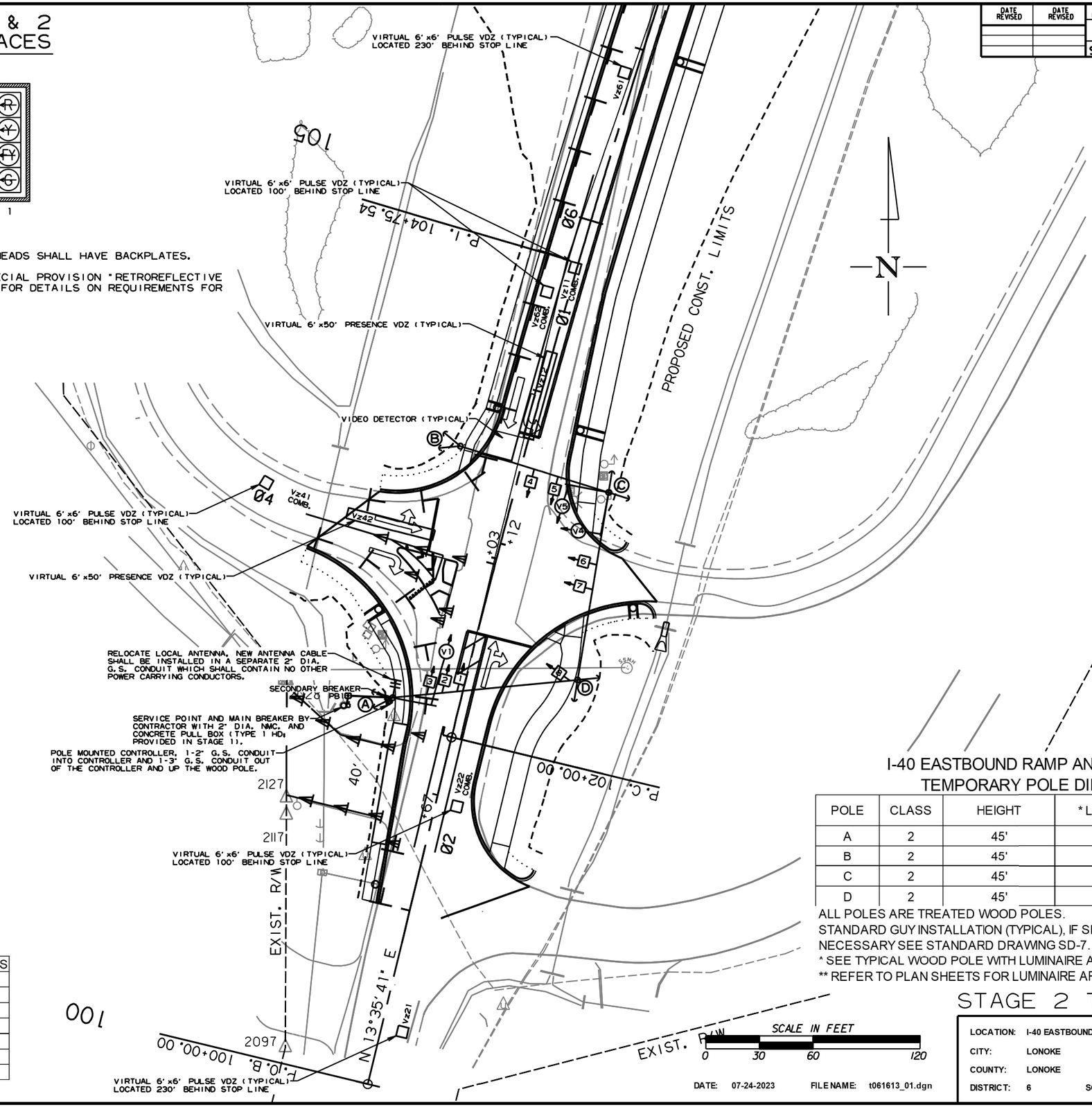

NOTE TO CONTRACTOR:
CONTACT THE CITY OF LONOKE FOR ANTENNA ORIENTATION.

DETECTOR SPACING CHART

ARDOT I-40 EASTBOUND RAMP MAIN LANE VIRTUAL LOOPS		
POSTED SPEED	DISTANCE FROM STOP LINE	
	LEAD VDZ	LAG VDZ
30 MPH	100'	N/A
ARDOT HIGHWAY 31 MAIN LANE VIRTUAL LOOPS		
POSTED SPEED	DISTANCE FROM STOP LINE	
	LEAD VDZ	LAG VDZ
40 MPH	230'	100'

I-40 EASTBOUND RAMP AND HIGHWAY 31 TEMPORARY POLE DIMENSIONS

POLE	CLASS	HEIGHT	* LUM. ARM	LUM. ANGLE
A	2	45'	25'	**
B	2	45'	N/A	**
C	2	45'	25'/25'	**
D	2	45'	N/A	**

ALL POLES ARE TREATED WOOD POLES.
STANDARD GUY INSTALLATION (TYPICAL), IF SIDEWALK GUY INSTALLATION IS NECESSARY SEE STANDARD DRAWING SD-7.
* SEE TYPICAL WOOD POLE WITH LUMINAIRE ARM DETAIL ON SHEET 81.
** REFER TO PLAN SHEETS FOR LUMINAIRE ARM ORIENTATION.

STAGE 2 TRAFFIC SIGNAL

LOCATION: I-40 EASTBOUND RAMP AND HIGHWAY 31
CITY: LONOKE
COUNTY: LONOKE
DISTRICT: 6 SCALE: 1" = 60' DRAWN BY: JDH

DATE: 07-24-2023 FILE NAME: t061613_01.dgn

T061613_01.DGN 7/24/2023

DATE REVISED	DATE REVISED	FED.RD. DIST.NO.	STATE	JOB NO.	SHEET NO.	TOTAL SHEETS
		6	ARK.	061613	85	215
		SIGNALIZATION PLAN SHEET				

STATE OF ARKANSAS
LICENSED PROFESSIONAL ENGINEER
No. 11425
TRINITY D. SMITH

Aug 16 2023 3:28 PM

DocuSign

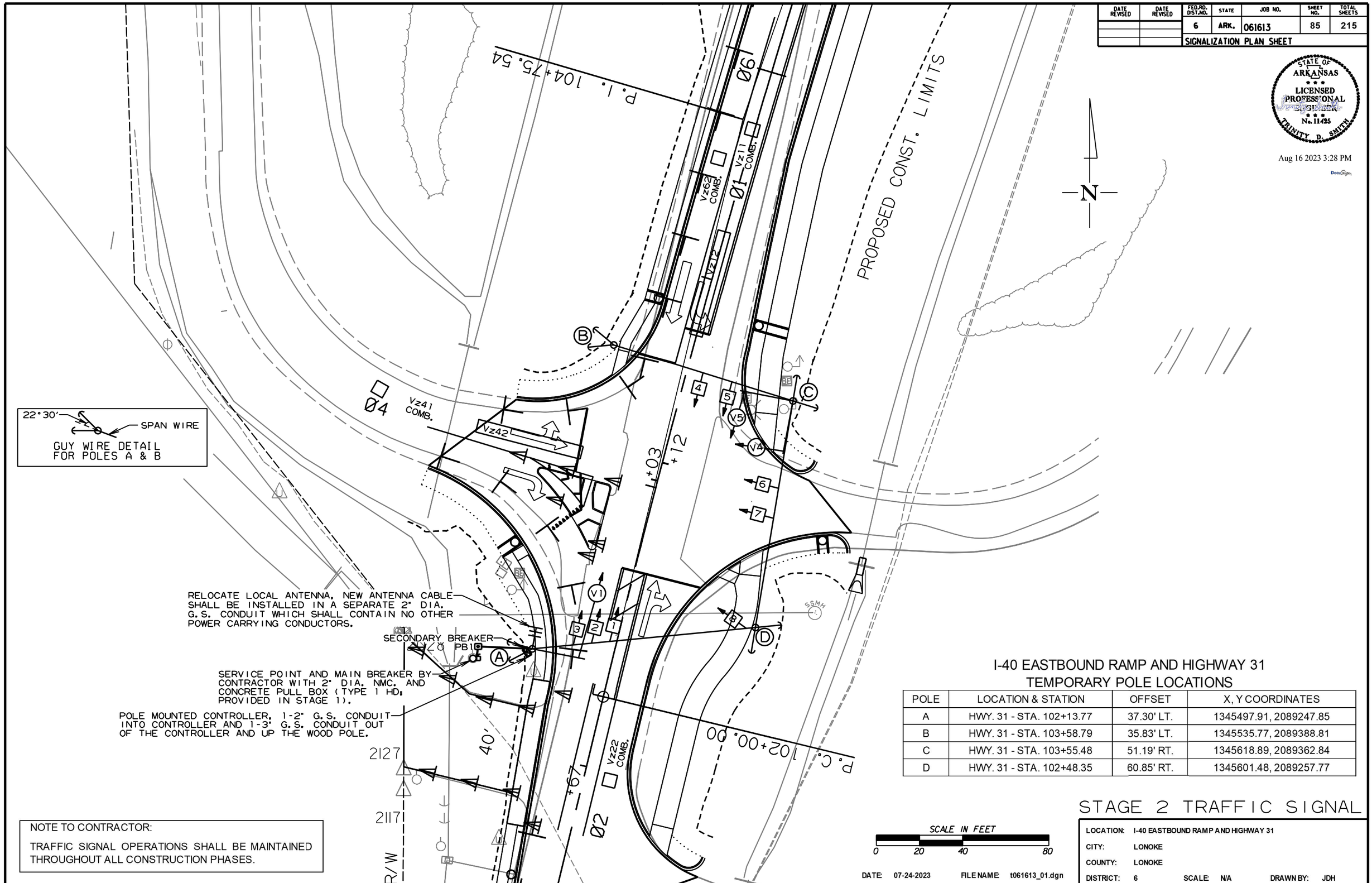

I-40 EASTBOUND RAMP AND HIGHWAY 31
TEMPORARY POLE LOCATIONS

POLE	LOCATION & STATION	OFFSET	X, Y COORDINATES
A	HWY. 31 - STA. 102+13.77	37.30' LT.	1345497.91, 2089247.85
B	HWY. 31 - STA. 103+58.79	35.83' LT.	1345535.77, 2089388.81
C	HWY. 31 - STA. 103+55.48	51.19' RT.	1345618.89, 2089362.84
D	HWY. 31 - STA. 102+48.35	60.85' RT.	1345601.48, 2089257.77

NOTE TO CONTRACTOR:

TRAFFIC SIGNAL OPERATIONS SHALL BE MAINTAINED THROUGHOUT ALL CONSTRUCTION PHASES.

SCALE IN FEET
0 20 40 80

DATE: 07-24-2023 FILE NAME: t061613_01.dgn

STAGE 2 TRAFFIC SIGNAL

LOCATION: I-40 EASTBOUND RAMP AND HIGHWAY 31
CITY: LONOKE
COUNTY: LONOKE
DISTRICT: 6 SCALE: N/A DRAWN BY: JDH

T061613_01.DGN 7/24/2023

DATE REVISED	DATE REVISED	FED.RD. DIST.NO.	STATE	JOB NO.	SHEET NO.	TOTAL SHEETS
		6	ARK.	061613	86	215
		SIGNALIZATION PLAN SHEET				

STATE OF ARKANSAS
LICENSED PROFESSIONAL ENGINEER
No. 11425
TRINITY D. SMITH

Aug 16 2023 3:28 PM

DocuSign

PHASING DIAGRAM

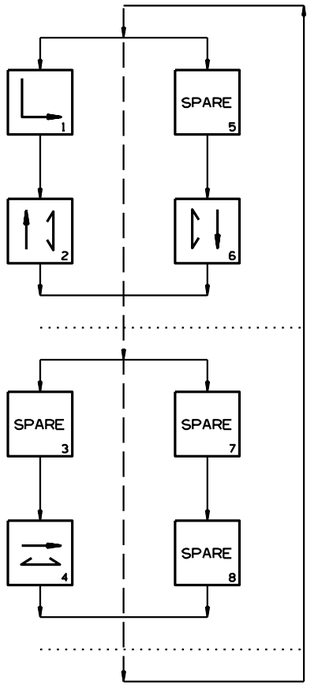

SIGNAL FACES

12" LENSES

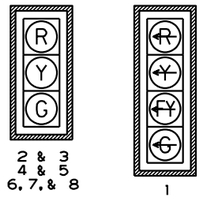

ONE SECTION (SOLID SYMBOL)

9 & 10
11 & 12
13 & 14

NOTES:
1. ALL SIGNAL HEADS SHALL HAVE BACKPLATES.
2. REFER TO SPECIAL PROVISION "RETROREFLECTIVE BACKPLATES" FOR DETAILS ON REQUIREMENTS FOR BACKPLATES.
3. REFER TO SPECIAL PROVISIONS FOR DETAILS ON REQUIREMENTS FOR PEDESTRIAN SIGNAL HEADS.
4. ALL PEDESTRIAN SIGNAL HEADS CAN BE PLACED INTO OPERATION IF THERE ARE BOTH WHEELCHAIR RAMPS AND A CROSSWALK THAT MEETS A.D.A.S. STANDARD.

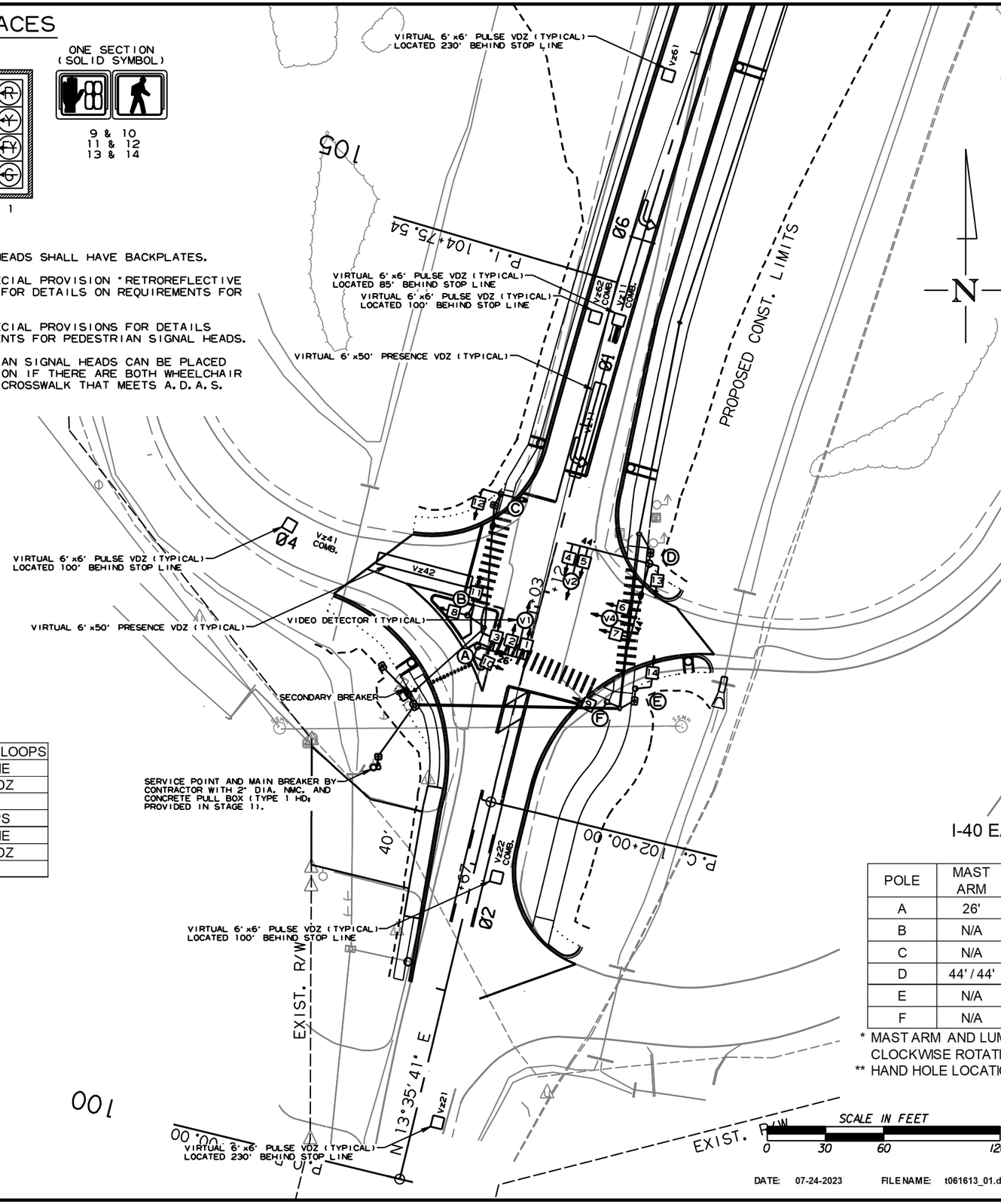

DETECTOR SPACING CHART

ARDOT I-40 EASTBOUND RAMP MAIN LANE VIRTUAL LOOPS		
POSTED SPEED	DISTANCE FROM STOP LINE	
	LEAD VDZ	LAG VDZ
30 MPH	100'	N/A
ARDOT HIGHWAY 31 MAIN LANE VIRTUAL LOOPS		
POSTED SPEED	DISTANCE FROM STOP LINE	
	LEAD VDZ	LAG VDZ
40 MPH	230'	100'

I-40 EASTBOUND RAMP AND HIGHWAY 31 POLE DIMENSIONS

POLE	MAST ARM	* MAST ARM ANGLE	** HAND HOLE	VERT. SHAFT	LUM. ARM	* LUM. ANGLE
A	26'	105°	90°	35'	10'	105°
B	N/A	N/A	N/A	15'	N/A	N/A
C	N/A	N/A	N/A	35'	10' / 15'	105° / 195°
D	44' / 44'	195° / 285°	180° / 90°	35'	15'	195°
E	N/A	N/A	N/A	10'	N/A	N/A
F	N/A	N/A	N/A	10'	N/A	N/A

* MAST ARM AND LUMINAIRE ARM ANGLE MEASURED FROM PLAN NORTH = 0°, CLOCKWISE ROTATION.
** HAND HOLE LOCATION MEASURED CLOCKWISE FROM MAST ARM.

DATE: 07-24-2023 FILE NAME: t061613_01.dgn

LOCATION: I-40 EASTBOUND RAMP AND HIGHWAY 31
CITY: LONOKE
COUNTY: LONOKE
DISTRICT: 6 SCALE: 1" = 60' DRAWN BY: JDH

T061613_01.DGN 7/24/2023

DATE REVISED	DATE REVISED	FED.RD. DIST.NO.	STATE	JOB NO.	SHEET NO.	TOTAL SHEETS
		6	ARK.	061613	87	215
		SIGNALIZATION PLAN SHEET				

STATE OF ARKANSAS
LICENSED PROFESSIONAL ENGINEER
No. 11425
TRINITY D. SMITH

Aug 16 2023 3:28 PM

DocuSign

DESIGN PARAMETERS

POSTED SPEED LIMIT:
40 MPH EAST AND WEST APPROACH
30 MPH WEST APPROACH

NO BUS STOPS
NO RAILROAD TRACKS
NO EXISTING INTERCONNECTIONS
NO FIRE STATION
NO PARKING
NO SIGHT DISTANCE RESTRICTIONS

LOCATION OF STOP LINES SHOWN ON PERMANENT PAVEMENT MARKING DETAILS (SEE SEPARATE SHEET).

MINIMUM CLEAR ZONE DISTANCE
4 FEET BEHIND CURB

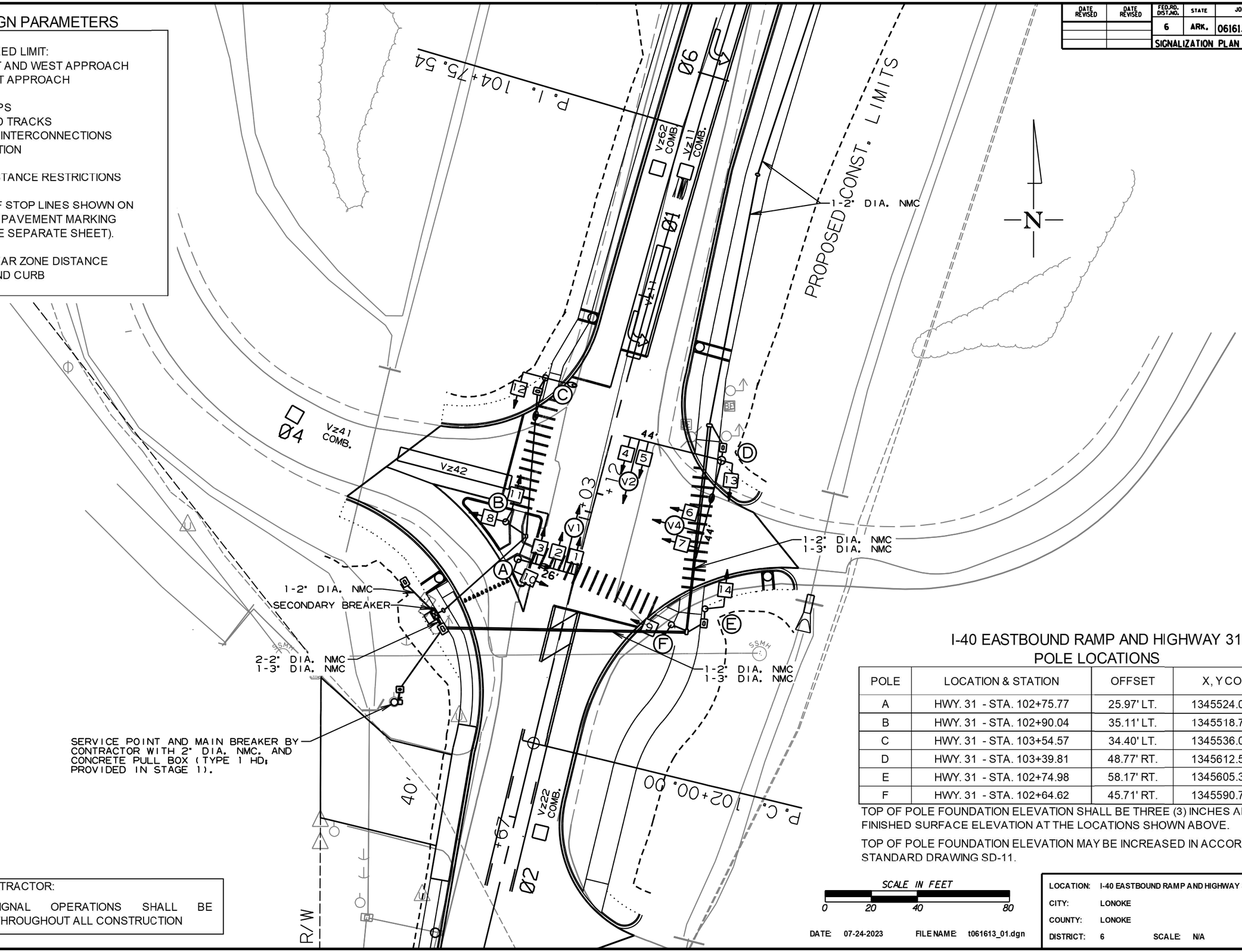

I-40 EASTBOUND RAMP AND HIGHWAY 31
POLE LOCATIONS

POLE	LOCATION & STATION	OFFSET	X, Y COORDINATES
A	HWY. 31 - STA. 102+75.77	25.97' LT.	1345524.03, 2089305.58
B	HWY. 31 - STA. 102+90.04	35.11' LT.	1345518.76, 2089321.75
C	HWY. 31 - STA. 103+54.57	34.40' LT.	1345536.04, 2089384.33
D	HWY. 31 - STA. 103+39.81	48.77' RT.	1345612.52, 2089348.48
E	HWY. 31 - STA. 102+74.98	58.17' RT.	1345605.35, 2089283.97
F	HWY. 31 - STA. 102+64.62	45.71' RT.	1345590.74, 2089277.09

TOP OF POLE FOUNDATION ELEVATION SHALL BE THREE (3) INCHES ABOVE THE FINISHED SURFACE ELEVATION AT THE LOCATIONS SHOWN ABOVE.

TOP OF POLE FOUNDATION ELEVATION MAY BE INCREASED IN ACCORDANCE WITH STANDARD DRAWING SD-11.

NOTE TO CONTRACTOR:

TRAFFIC SIGNAL OPERATIONS SHALL BE MAINTAINED THROUGHOUT ALL CONSTRUCTION

SCALE IN FEET
0 20 40 80

DATE: 07-24-2023 FILE NAME: t061613_01.dgn

LOCATION: I-40 EASTBOUND RAMP AND HIGHWAY 31
CITY: LONOKE
COUNTY: LONOKE
DISTRICT: 6 SCALE: N/A DRAWN BY: JDH

T061613_01.DGN 7/24/2023

DATE REVISED	DATE REVISED	FED.RD. DIST.NO.	STATE	JOB NO.	SHEET NO.	TOTAL SHEETS
		6	ARK.	061613	88	215
		SIGNALIZATION PLAN SHEET				

STATE OF ARKANSAS
LICENSED PROFESSIONAL ENGINEER
No. 11425
TRINITY D. SMITH

Aug 16 2023 3:28 PM

DocuSign

CONTROLLER CABINET LOCATION

LOCATION & STATION	* OFFSET	* X, Y COORDINATES
HWY. 31 - STA. 102+43.82	54.90' LT.	1345488.10, 2089281.48

* CENTER OF CABINET

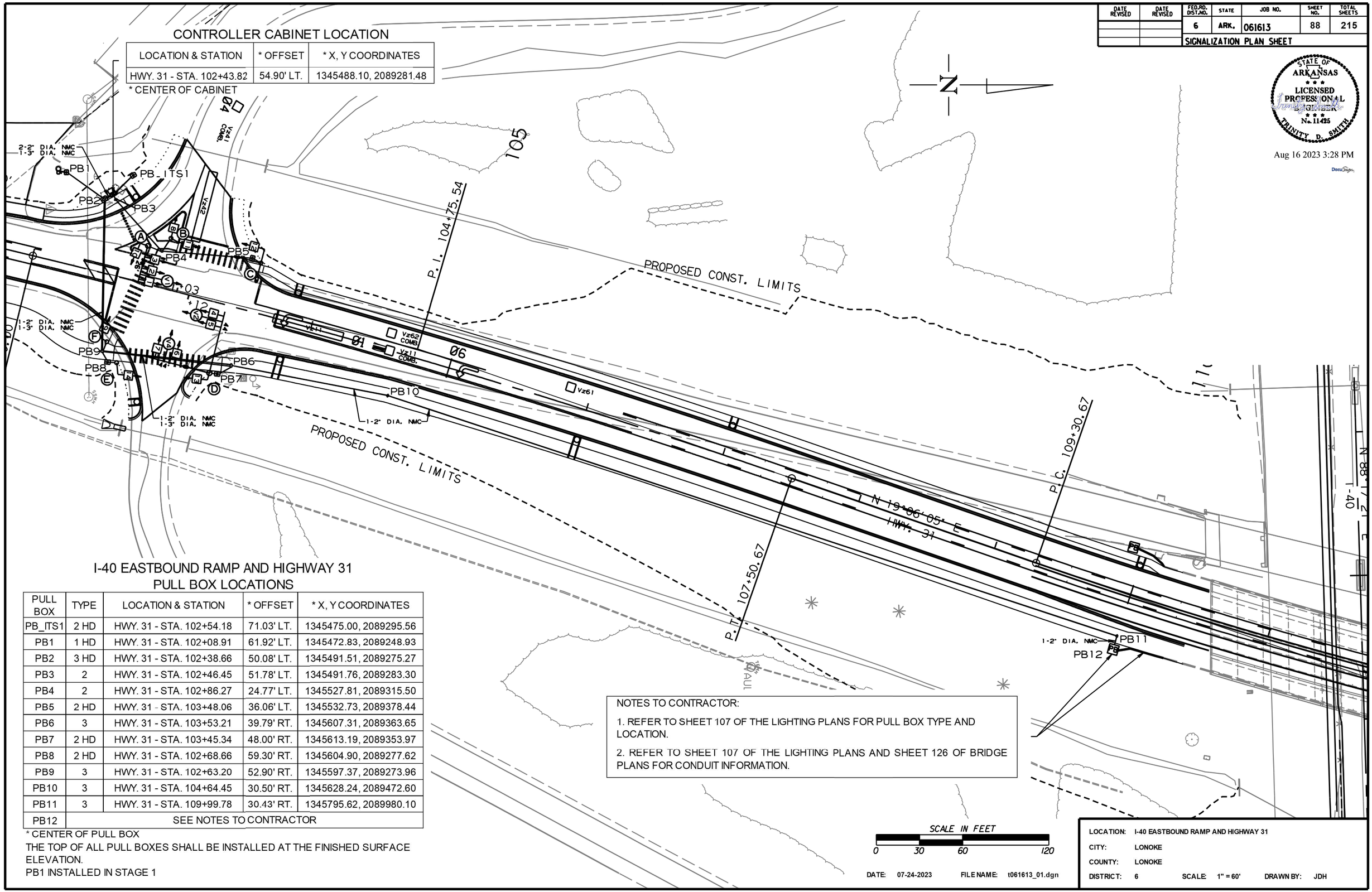

I-40 EASTBOUND RAMP AND HIGHWAY 31
PULL BOX LOCATIONS

PULL BOX	TYPE	LOCATION & STATION	* OFFSET	* X, Y COORDINATES
PB_ITS1	2 HD	HWY. 31 - STA. 102+54.18	71.03' LT.	1345475.00, 2089295.56
PB1	1 HD	HWY. 31 - STA. 102+08.91	61.92' LT.	1345472.83, 2089248.93
PB2	3 HD	HWY. 31 - STA. 102+38.66	50.08' LT.	1345491.51, 2089275.27
PB3	2	HWY. 31 - STA. 102+46.45	51.78' LT.	1345491.76, 2089283.30
PB4	2	HWY. 31 - STA. 102+86.27	24.77' LT.	1345527.81, 2089315.50
PB5	2 HD	HWY. 31 - STA. 103+48.06	36.06' LT.	1345532.73, 2089378.44
PB6	3	HWY. 31 - STA. 103+53.21	39.79' RT.	1345607.31, 2089363.65
PB7	2 HD	HWY. 31 - STA. 103+45.34	48.00' RT.	1345613.19, 2089353.97
PB8	2 HD	HWY. 31 - STA. 102+68.66	59.30' RT.	1345604.90, 2089277.62
PB9	3	HWY. 31 - STA. 102+63.20	52.90' RT.	1345597.37, 2089273.96
PB10	3	HWY. 31 - STA. 104+64.45	30.50' RT.	1345628.24, 2089472.60
PB11	3	HWY. 31 - STA. 109+99.78	30.43' RT.	1345795.62, 2089980.10
PB12	SEE NOTES TO CONTRACTOR			

* CENTER OF PULL BOX

THE TOP OF ALL PULL BOXES SHALL BE INSTALLED AT THE FINISHED SURFACE ELEVATION.

PB1 INSTALLED IN STAGE 1

NOTES TO CONTRACTOR:

1. REFER TO SHEET 107 OF THE LIGHTING PLANS FOR PULL BOX TYPE AND LOCATION.

2. REFER TO SHEET 107 OF THE LIGHTING PLANS AND SHEET 126 OF BRIDGE PLANS FOR CONDUIT INFORMATION.

DATE: 07-24-2023 FILE NAME: t061613_01.dgn

LOCATION: I-40 EASTBOUND RAMP AND HIGHWAY 31
CITY: LONOKE
COUNTY: LONOKE
DISTRICT: 6 SCALE: 1" = 60' DRAWN BY: JDH

T061613_01.DGN 7/24/2023

DATE REVISED	DATE REVISED	FED.RD. DIST.NO.	STATE	JOB NO.	SHEET NO.	TOTAL SHEETS
		6	ARK.	061613	89	215
		SIGNALIZATION PLAN SHEET				

STATE OF ARKANSAS
LICENSED PROFESSIONAL ENGINEER
No. 11425
TRINITY D. SMITH

Aug 16 2023 3:29 PM

DocuSign

WIRING DIAGRAM

NOTES TO CONTRACTOR:

1. ONE SEPARATE 1-5c IS RUN TO EACH POLE FOR THE PEDESTRIAN PUSH BUTTON.
2. ALL DETECTOR RACK CHANNELS, INCLUDING UNUSED, SHALL BE BROUGHT TO TERMINAL STRIP IN DETECTOR AREA OF CABINET.
3. THE LOCAL GOVERNMENT SHALL BE RESPONSIBLE FOR PROVIDING POWER TO THE SERVICE POINT.
4. SEE SHEET NUMBER 77 FOR GROUNDING ARRAY DETAIL.

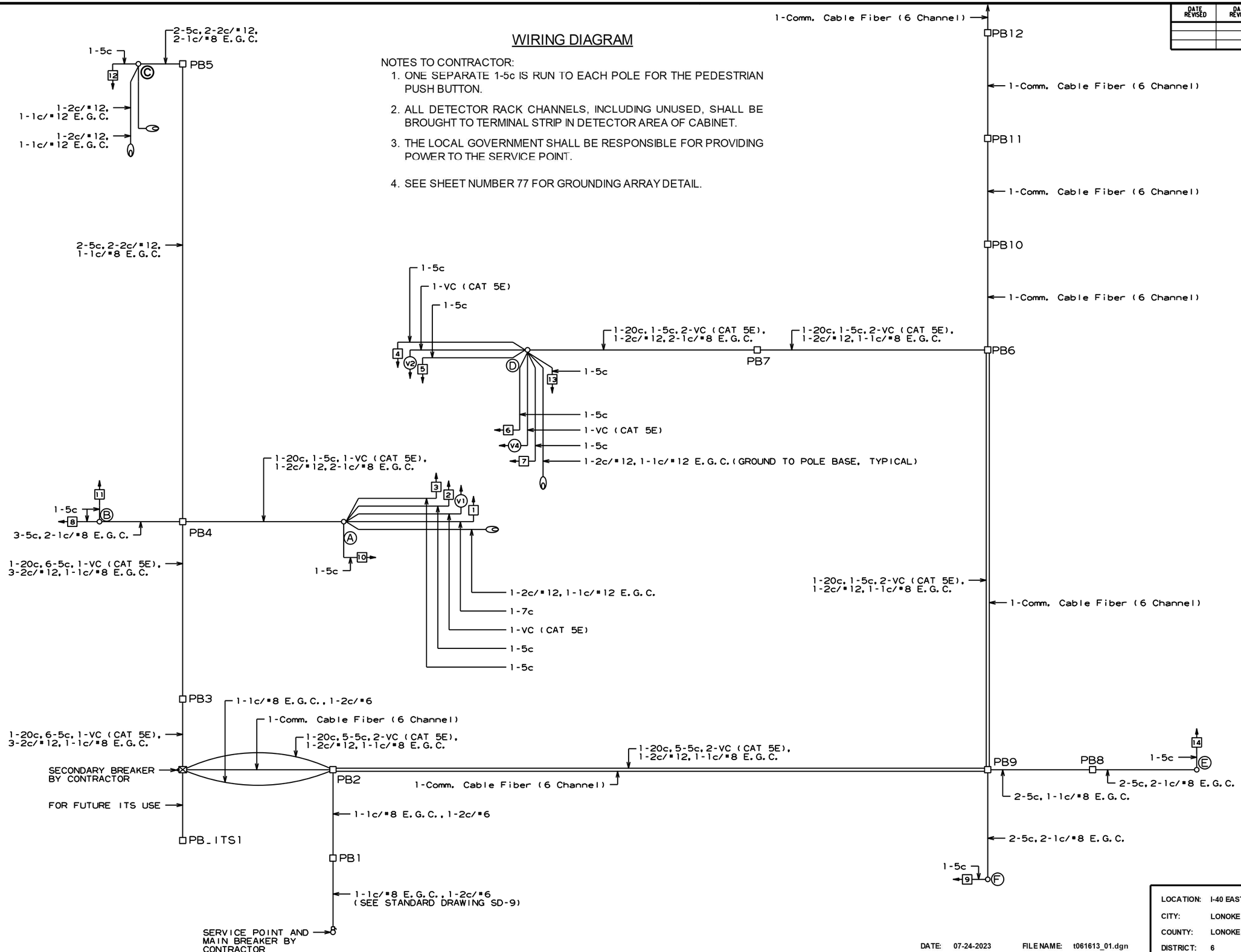

LOCATION:	I-40 EASTBOUND RAMP AND HIGHWAY 31		
CITY:	LONOKE		
COUNTY:	LONOKE		
DISTRICT: 6	SCALE: 1" = 40'	DRAWN BY: JDH	

DATE: 07-24-2023 FILE NAME: t061613_01.dgn

T061613_01.DGN 7/24/2023

DATE REVISED	DATE REVISED	FED.RD. DIST.NO.	STATE	JOB NO.	SHEET NO.	TOTAL SHEETS
		6	ARK.	061613	90	215
		SIGNALIZATION PLAN SHEET				

STATE OF ARKANSAS
LICENSED PROFESSIONAL ENGINEER
No. 11425
TRINITY D. SMITH

Aug 16 2023 3:29 PM

DocuSign

PHASING DIAGRAM

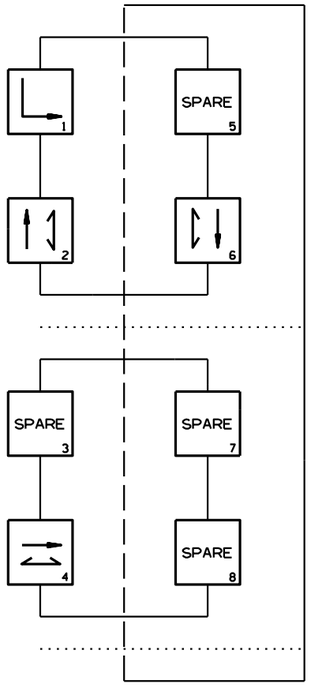

SIGNAL FACES

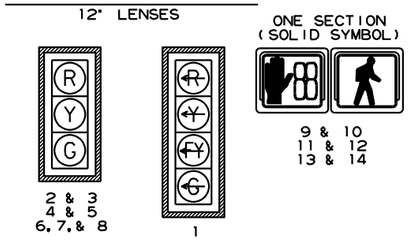

NOTES:
1. ALL SIGNAL HEADS SHALL HAVE BACKPLATES.
2. REFER TO SPECIAL PROVISION "RETROREFLECTIVE BACKPLATES" FOR DETAILS ON REQUIREMENTS FOR BACKPLATES.
3. REFER TO SPECIAL PROVISIONS FOR DETAILS ON REQUIREMENTS FOR PEDESTRIAN SIGNAL HEADS.
4. ALL PEDESTRIAN SIGNAL HEADS CAN BE PLACED INTO OPERATION IF THERE ARE BOTH WHEELCHAIR RAMPS AND A CROSSWALK THAT MEETS A.D.A.S. STANDARD.

DETECTOR CHART

DETECTOR SYSTEM DESCRIPTION: JOB 061613

I-40 EASTBOUND RAMP AND HIGHWAY 31 DETECTOR ASSIGNMENTS				HARDWARE INPUTS BY SUPPLIER			PROGRAM ASSIGNMENTS			COMMENTS	TUBE LENGTHS
							LOCAL		MASTER SYSTEM DETECTOR NUMBERS		
DET. ID #	LOCATION DIRECTION	TYPE	DET. #	CAB. TRM. #	AMP CHN. #	CON. IMP. #	PHS	SYSTEM DET. #			
Vz11	SB LEFT TURN FAR	COMB.			1	V9	1	1		CAMERA V1	74"
Vz12	SB LEFT TURN	LOCAL			2	V1	1			CAMERA V1	74"
Vz21	NB ADVANCE	LOCAL			5	V2	2			CAMERA V2	74"
Vz22	NB NEAR	COMB.			6	V10	2	2		CAMERA V2	74"
Vz41	EB ADVANCE	LOCAL			9	V4	4			CAMERA V4	37"
Vz42	EB NEAR	COMB.			10	V12	4	4		CAMERA V4	37"
Vz61	SB ADVANCE	LOCAL			3	V6	6			CAMERA V1	74"
Vz62	SB NEAR	COMB.			4	V14	6	6		CAMERA V1	74"
PB2 A&B	I-40 RAMP E. LEG	PED.				P2	2				
PB4 A&B	HWY. 31 S. LEG	PED.				P4	4				
PB6 A&B	I-40 RAMP W. LEG	PED.				P6	6				
					SPARE: 7, 8, 11-16						

CONTROLLER INPUT ABBREVIATIONS:
V = VEHICLE INPUT
D = SYSTEM OR AUXILIARY INPUT
P = PEDESTRIAN INPUT

NOTE: "AMP CHN =" REFERS TO THE RACK OUTPUT POSITION.
THIS IS WIRED TO CONTROLLER INPUT DETECTOR NUMBER WHICH IS PROGRAMMED TO ACTUATE THE DESIGNATED PHASE.
EXAMPLE: V9 = SYSTEM DETECTOR 1, V10 = SYSTEM DETECTOR 2

INTERVAL CHART

SIGNAL FACES	I-40 EASTBOUND RAMP AND HIGHWAY 31							FLASH SEQUENCE
	1+6	CLR.	2+6	CLR.	4	CLR.		
1	~~← G~~	Y	~~← FY~~	***	~~← R~~	~~← R~~		~~← R~~
2 & 3	G	**	G	**	R	R		R
4 & 5	R	R	G	Y	R	R		R
6, 7, & 8	R	R	R	R	G	Y		R
9 & 10	DW	DW	DW	DW	W	FDW		BLK
11 & 12	DW	DW	W	FDW	DW	DW		BLK
13 & 14	DW	DW	W	FDW	DW	DW		BLK

* DENOTES GREEN OR YELLOW ARROW DEPENDING ON NEXT PHASE
** DENOTES GREEN OR YELLOW BALL DEPENDING ON NEXT PHASE
*** DENOTES FLASHING YELLOW ARROW OR YELLOW ARROW DEPENDING ON NEXT PHASE

DATE: 07-24-2023 FILE NAME: t061613_01.dgn

LOCATION: I-40 EASTBOUND RAMP AND HIGHWAY 31
CITY: LONOKE
COUNTY: LONOKE
DISTRICT: 6 SCALE: 1" = 40' DRAWN BY: JDH

T061613_01.DGN 7/24/2023

DATE REVISED	DATE REVISED	FED.RD. DIST.NO.	STATE	JOB NO.	SHEET NO.	TOTAL SHEETS
		6	ARK.	061613	91	215
		TRAFFIC SIGNAL QUANTITIES - DEE DEE LANE				

STATE OF ARKANSAS
LICENSED PROFESSIONAL ENGINEER
No. 11425
TRINITY D. SMITH

Aug 16 2023 3:29 PM

DocuSign

STAGE 1 TRAFFIC SIGNAL QUANTITIES

ITEM NUMBER	ITEM	QUANTITY	UNIT
SP & 701	SYSTEM LOCAL CONTROLLER TS2-TYPE 2 (8 PHASES)	1	EACH
SP	LOCAL RADIO WITH ANTENNA RELOCATION	1	EACH
SP	ANTENNA CABLE (TYPE 6)	50	LIN. FT.
SP & 706	TRAFFIC SIGNAL HEAD, LED, (3 SECTION, 1 WAY)	10	EACH
SP & 706	TRAFFIC SIGNAL HEAD, LED, (4 SECTION, 1 WAY)	1	EACH
708	TRAFFIC SIGNAL CABLE (5C/14 A.W.G.)	360	LIN. FT.
708	TRAFFIC SIGNAL CABLE (7C/14 A.W.G.)	1016	LIN. FT.
SP	ELECTRICAL CONDUCTORS-IN-CONDUIT (1C/8 A.W.G., E.G.C.)	120	LIN. FT.
SP	ELECTRICAL CONDUCTORS-IN-CONDUIT (2C/6 A.W.G.)	70	LIN. FT.
709	GALVANIZED STEEL CONDUIT (2")	50	LIN. FT.
709	GALVANIZED STEEL CONDUIT (3")	30	LIN. FT.
710	NON-METALLIC CONDUIT (2")	50	LIN. FT.
710	NON-METALLIC CONDUIT (3")	6	LIN. FT.
SS & 711	CONCRETE PULL BOX (TYPE 1 HD)	1	EACH
SS & 713	SPAN WIRE ASSEMBLY	1	EACH
SP	SERVICE POINT ASSEMBLY (2 CIRCUITS)	1	EACH
SP	REMOVAL OF TRAFFIC SIGNAL EQUIPMENT	0.25	LUMP SUM
716	TREATED WOOD POLE (CLASS 2, 45')	4	EACH
SP & 733	VIDEO DETECTOR (IP)	4	EACH
SP & 733	VIDEO CABLE (EXTERIOR CAT 5E)	687	LIN. FT.
SP & 733	VIDEO MONITOR (CLR)	1	EACH
SP & 733	CENTRAL CONTROL UNIT (8 CHANNEL)	1	EACH

STAGE 1:
THE EXISTING ANTENNA AND RADIO SHALL BE RELOCATED AS SHOWN ON THE PLANS AND UTILIZED DURING STAGE CONSTRUCTION. INSTALL ALL TEMPORARY TRAFFIC SIGNAL EQUIPMENT, INCLUDING THE PERMANENT SERVICE POINT ASSEMBLY (2 CIRCUITS) WITH ALL ASSOCIATED ITEMS AS SHOWN ON THE STAGE 1 TEMPORARY TRAFFIC SIGNAL PLANS AND REMOVE ALL EXISTING TRAFFIC SIGNAL EQUIPMENT.
MAINTAIN THIS TRAFFIC SIGNAL CONFIGURATION AS SHOWN ON THE STAGE 1 TEMPORARY TRAFFIC SIGNAL PLANS.
(REFER TO MAINTENANCE OF TRAFFIC DETAILS.)

STAGE 2 TRAFFIC SIGNAL QUANTITIES

ITEM NUMBER	ITEM	QUANTITY	UNIT
SP	RELOCATION OF TRAFFIC SIGNAL HEAD	2	EACH
SP	VIDEO DETECTOR ROTATION	2	EACH

STAGE 2:
RELOCATE SIGNAL HEADS 1 & 2 AND ROTATE VIDEO DETECTORS V2 & V5 AS SHOWN ON THE PLANS.
MAINTAIN THIS TRAFFIC SIGNAL CONFIGURATION AS SHOWN ON THE STAGE 2 TRAFFIC SIGNAL PLANS.
(REFER TO MAINTENANCE OF TRAFFIC DETAILS.)

PERMANENT TRAFFIC SIGNAL QUANTITIES

ITEM NUMBER	ITEM	QUANTITY	UNIT
SP & 701	SYSTEM LOCAL CONTROLLER-FIBER (8 PHASES)	1	EACH
SP	WIC FIBER ENCLOSURE	1	EACH
SP & 706	TRAFFIC SIGNAL HEAD, LED, (3 SECTION, 1 WAY)	10	EACH
SP & 706	TRAFFIC SIGNAL HEAD, LED, (4 SECTION, 1 WAY)	4	EACH
SP & 707	COUNTDOWN PEDESTRIAN SIGNAL HEAD, LED	8	EACH
708	TRAFFIC SIGNAL CABLE (5C/14 A.W.G.)	2391	LIN. FT.
708	TRAFFIC SIGNAL CABLE (7C/14 A.W.G.)	317	LIN. FT.
708	TRAFFIC SIGNAL CABLE (20C/14 A.W.G.)	594	LIN. FT.
SP	ELECTRICAL CONDUCTORS-IN-CONDUIT (1C/8 A.W.G., E.G.C.)	719	LIN. FT.
SP	ELECTRICAL CONDUCTORS-IN-CONDUIT (1C/12 A.W.G., E.G.C.)	230	LIN. FT.
SP	ELECTRICAL CONDUCTORS-IN-CONDUIT (2C/6 A.W.G.)	50	LIN. FT.
SP	ELECTRICAL CONDUCTORS FOR LUMINAIRES	824	LIN. FT.
710	NON-METALLIC CONDUIT (2")	760	LIN. FT.
710	NON-METALLIC CONDUIT (3")	559	LIN. FT.
SS & 711	CONCRETE PULL BOX (TYPE 2)	2	EACH
SS & 711	CONCRETE PULL BOX (TYPE 3)	3	EACH
SS & 711	CONCRETE PULL BOX (TYPE 2 HD)	3	EACH
SS & 711	CONCRETE PULL BOX (TYPE 3 HD)	3	EACH
SS & 714	TRAFFIC SIGNAL MAST ARM AND POLE WITH FOUNDATION (36')	1	EACH
SS & 714	TRAFFIC SIGNAL MAST ARM AND POLE WITH FOUNDATION (46')	1	EACH
SS & 714	TRAFFIC SIGNAL MAST ARM AND POLE WITH FOUNDATION (50')	1	EACH
SS & 714	TRAFFIC SIGNAL MAST ARM AND POLE WITH FOUNDATION (68')	1	EACH
SP	LED LUMINAIRE ASSEMBLY	4	EACH
SS & 715	TRAFFIC SIGNAL PEDESTAL POLE WITH FOUNDATION	3	EACH
SP	REMOVAL OF TRAFFIC SIGNAL EQUIPMENT	0.25	LUMP SUM
SP	18" STREET NAME SIGN	4	EACH
SP & 733	VIDEO DETECTOR (IP)	1	EACH
SP & 733	HYBRID VIDEO/RADAR DETECTOR	3	EACH
SP & 733	VIDEO CABLE (EXTERIOR CAT 5E)	930	LIN. FT.
SP & 733	VIDEO MONITOR (CLR)	1	EACH
SP & 733	CENTRAL CONTROL UNIT (8 CHANNEL)	1	EACH

PERMANENT TRAFFIC SIGNAL:
THE TEMPORARY TRAFFIC SIGNAL FOR STAGE 2 SHALL REMAIN IN OPERATION UNTIL THE PERMANENT TRAFFIC SIGNAL IS COMPLETED AND OPERATIONAL. INSTALL THE PERMANENT TRAFFIC SIGNAL WITH ALL ASSOCIATED EQUIPMENT. UTILIZE THE SERVICE POINT ASSEMBLY (2 CIRCUITS) INSTALLED IN STAGE 1, AND REMOVE THE TEMPORARY TRAFFIC SIGNAL AND COMPONENTS THAT WERE IN USE FOR STAGE 2.
INSTALL COMMUNICATION CABLE, FIBER (6 CHANNEL) FROM THE CONTROLLER CABINET TO THE CONTROLLER CABINET LOCATED AT THE INTERSECTION OF HWY. 31 AND I-40 EASTBOUND RAMP, STATION 102+43.82. THE QUANTITIES FOR THE COMMUNICATION CABLE, FIBER (6 CHANNEL) ARE ACCOUNTED FOR IN THE PERMANENT TRAFFIC SIGNAL QUANTITIES BOX THAT IS SHOWN ON SHEET 79, TRAFFIC SIGNAL QUANTITIES - I-40 EB RAMP.
(REFER TO PERMANENT TRAFFIC SIGNAL PLANS.)

DATE: 07-24-2023 FILE NAME: t061613_02.dgn

LOCATION: HIGHWAY 31 AND DEE DEE LANE / BROWNSVILLE LOOP
CITY: LONOKE
COUNTY: LONOKE
DISTRICT: 6 SCALE: N/A DRAWN BY: JDH

T061613_02.DGN 7/24/2023

DATE REVISED	DATE REVISED	FED.RD. DIST.NO.	STATE	JOB NO.	SHEET NO.	TOTAL SHEETS
		6	ARK.	061613	92	215
		SIGNALIZATION PLAN SHEET				

STATE OF ARKANSAS
LICENSED PROFESSIONAL ENGINEER
No. 11425
TRINITY D. SMITH

Aug 16 2023 3:29 PM

DocuSign

STAGES 1 & 2 PHASING DIAGRAM

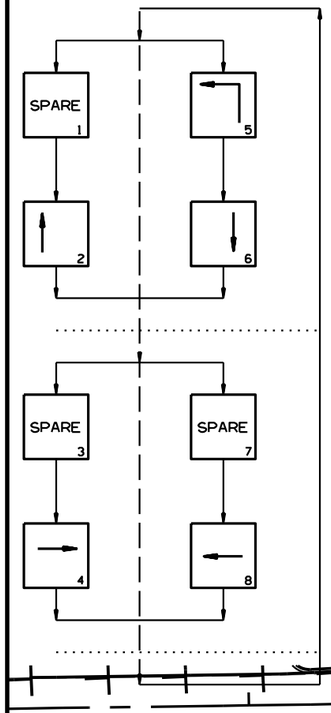

STAGES 1 & 2 SIGNAL FACES

12" LENSES

NOTES:
1. ALL SIGNAL HEADS SHALL HAVE BACKPLATES.
2. REFER TO SPECIAL PROVISION "RETROREFLECTIVE BACKPLATES" FOR DETAILS ON REQUIREMENTS FOR BACKPLATES.

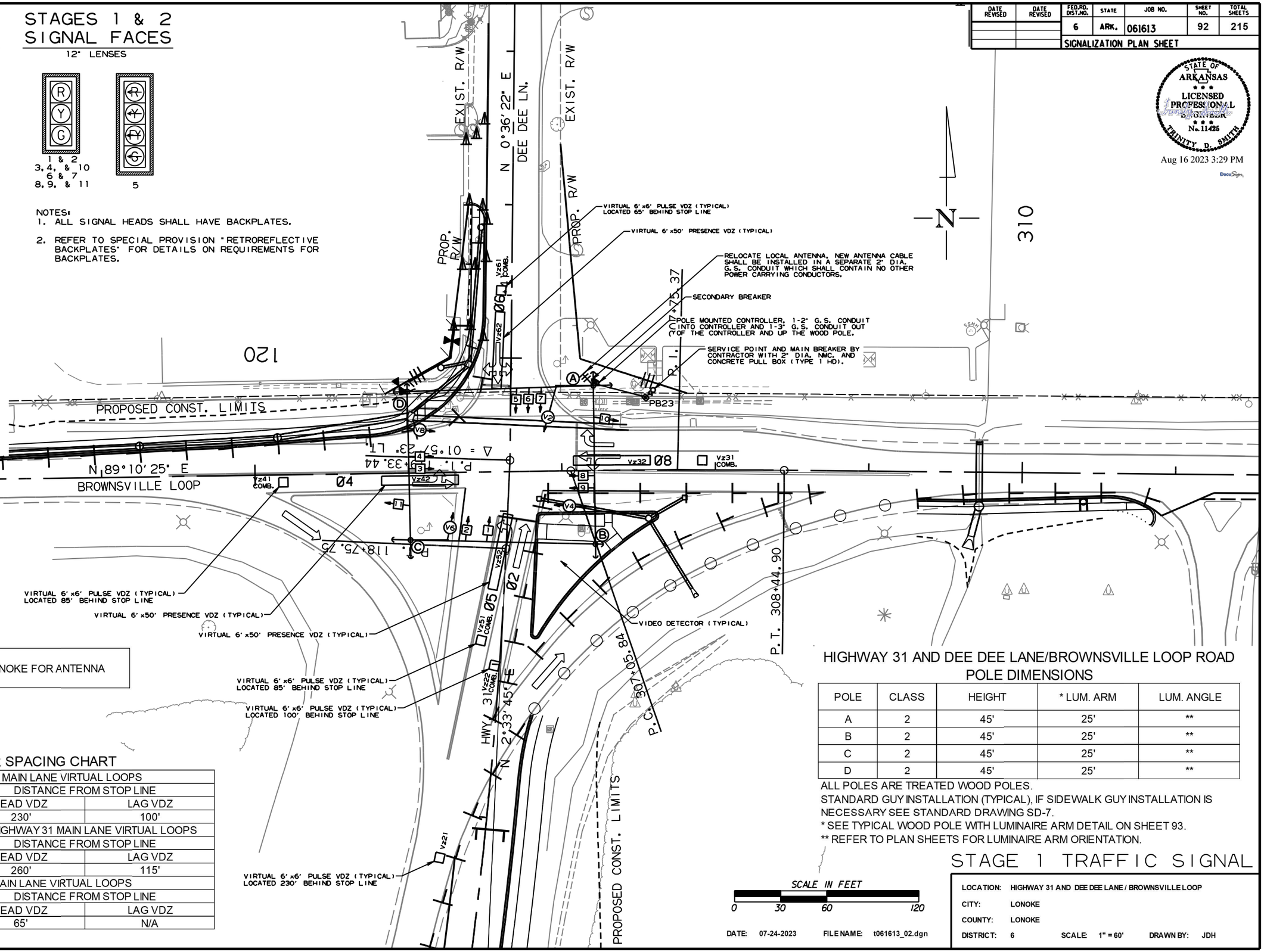

NOTE TO CONTRACTOR:
CONTACT THE CITY OF LONOKE FOR ANTENNA ORIENTATION.

DETECTOR SPACING CHART

ARDOT HIGHWAY 31 MAIN LANE VIRTUAL LOOPS		
POSTED SPEED	DISTANCE FROM STOP LINE	
	LEAD VDZ	LAG VDZ
40 MPH	230'	100'
BROWNSVILLE LOOP ROAD /HIGHWAY 31 MAIN LANE VIRTUAL LOOPS		
POSTED SPEED	DISTANCE FROM STOP LINE	
	LEAD VDZ	LAG VDZ
45 MPH	260'	115'
DEE DEE LANE MAIN LANE VIRTUAL LOOPS		
POSTED SPEED	DISTANCE FROM STOP LINE	
	LEAD VDZ	LAG VDZ
25 MPH	65'	N/A

HIGHWAY 31 AND DEE DEE LANE/BROWNSVILLE LOOP ROAD POLE DIMENSIONS

POLE	CLASS	HEIGHT	* LUM. ARM	LUM. ANGLE
A	2	45'	25'	**
B	2	45'	25'	**
C	2	45'	25'	**
D	2	45'	25'	**

ALL POLES ARE TREATED WOOD POLES.
STANDARD GUY INSTALLATION (TYPICAL), IF SIDEWALK GUY INSTALLATION IS NECESSARY SEE STANDARD DRAWING SD-7.
* SEE TYPICAL WOOD POLE WITH LUMINAIRE ARM DETAIL ON SHEET 93.
** REFER TO PLAN SHEETS FOR LUMINAIRE ARM ORIENTATION.

STAGE 1 TRAFFIC SIGNAL

DATE: 07-24-2023 FILE NAME: t061613_02.dgn

LOCATION: HIGHWAY 31 AND DEE DEE LANE / BROWNSVILLE LOOP
CITY: LONOKE
COUNTY: LONOKE
DISTRICT: 6 SCALE: 1" = 60' DRAWN BY: JDH

T061613_02.DGN 7/24/2023

DATE REVISED	DATE REVISED	FED.RD. DIST.NO.	STATE	JOB NO.	SHEET NO.	TOTAL SHEETS
		6	ARK.	061613	93	215
		SIGNALIZATION PLAN SHEET				

STATE OF ARKANSAS
LICENSED PROFESSIONAL ENGINEER
No. 11425
TRINITY D. SMITH

Aug 16 2023 3:29 PM

DocuSign

HIGHWAY 31 AND DEE DEE LANE/BROWNSVILLE LOOP ROAD
TEMPORARY POLE LOCATIONS

POLE	LOCATION & STATION	OFFSET	X, Y COORDINATES
A	HWY. 31 - STA. 119+82.58	53.78' RT.	1345978.60, 2090955.13
B	HWY. 31 - STA. 118+81.30	58.09' RT.	1345980.01, 2090851.88
C	HWY. 31 - STA. 118+78.59	62.44' LT.	1345859.47, 2090854.56
D	HWY. 31 - STA. 119+77.39	67.48' LT.	1345857.29, 2090951.23

NOTES TO CONTRACTOR:

1. TRAFFIC SIGNAL OPERATIONS SHALL BE MAINTAINED THROUGHOUT ALL CONSTRUCTION PHASES.
2. THE TOP OF PULL BOX SHALL BE INSTALLED FLUSH WITH THE EXISTING SURFACE. SEE SHEET 100 FOR PB23 LOCATION.

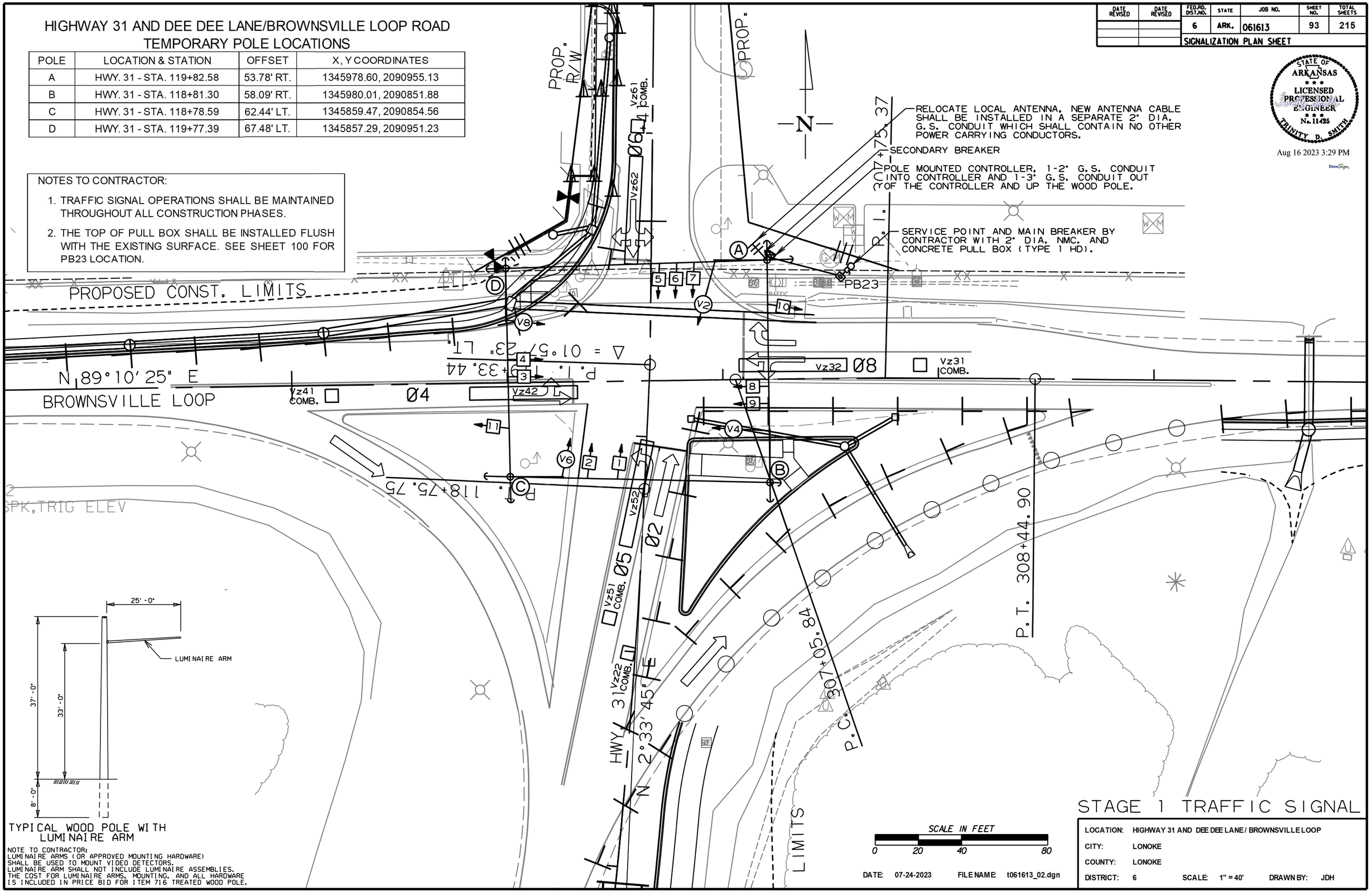

TYPICAL WOOD POLE WITH LUMINAIRE ARM

NOTE TO CONTRACTOR:
LUMINAIRE ARMS (OR APPROVED MOUNTING HARDWARE) SHALL BE USED TO MOUNT VIDEO DETECTORS.
LUMINAIRE ARM SHALL NOT INCLUDE LUMINAIRE ASSEMBLIES.
THE COST FOR LUMINAIRE ARMS, MOUNTING, AND ALL HARDWARE IS INCLUDED IN PRICE BID FOR ITEM 716 TREATED WOOD POLE.

STAGE 1 TRAFFIC SIGNAL

LOCATION:	HIGHWAY 31 AND DEE DEE LANE / BROWNSVILLE LOOP		
CITY:	LONOKE		
COUNTY:	LONOKE		
DISTRICT:	6	SCALE: 1" = 40'	DRAWN BY: JDH

DATE: 07-24-2023 FILE NAME: t061613_02.dgn

T061613_02.DGN 7/24/2023

DATE REVISED	DATE REVISED	FED.RD. DIST.NO.	STATE	JOB NO.	SHEET NO.	TOTAL SHEETS
		6	ARK.	061613	94	215
		SIGNALIZATION PLAN SHEET				

STATE OF ARKANSAS
LICENSED PROFESSIONAL ENGINEER
No. 11425
TRINITY D. SMITH

Aug 16 2023 3:30 PM

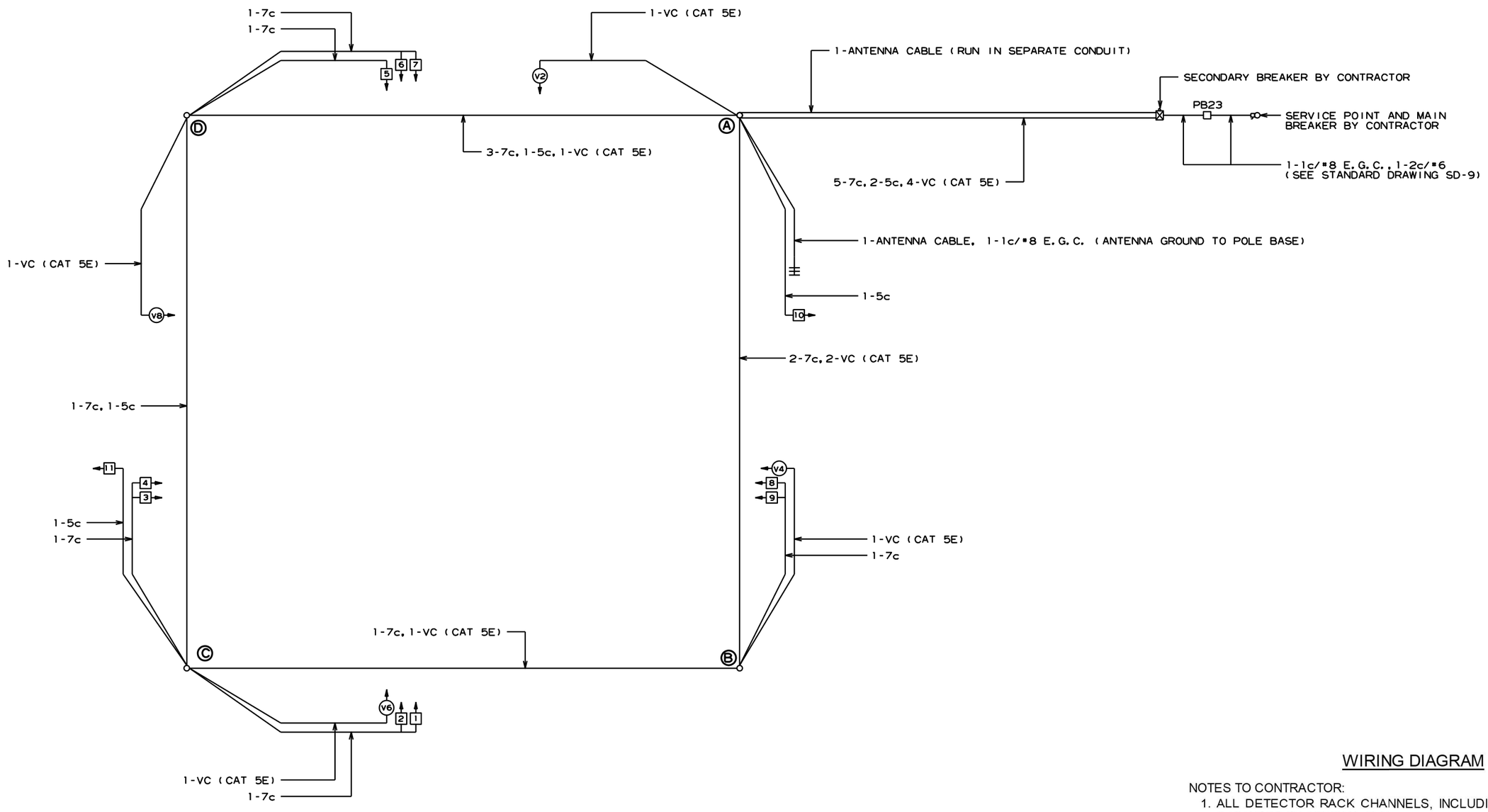

WIRING DIAGRAM

NOTES TO CONTRACTOR:

1. ALL DETECTOR RACK CHANNELS, INCLUDING UNUSED, SHALL BE BROUGHT TO TERMINAL STRIP IN DETECTOR AREA OF CABINET.
2. THE LOCAL GOVERNMENT SHALL BE RESPONSIBLE FOR PROVIDING POWER TO THE SERVICE POINT.

LOCATION:	HIGHWAY 31 AND DEE DEE LANE / BROWNSVILLE LOOP				
CITY:	LONOKE				
COUNTY:	LONOKE				
DISTRICT:	6	SCALE:	N/A	DRAWN BY:	JDH

DATE: 07-24-2023 FILE NAME: t061613_02.dgn

T061613_02.DGN 7/24/2023

DATE REVISED	DATE REVISED	FED.RD. DIST.NO.	STATE	JOB NO.	SHEET NO.	TOTAL SHEETS
		6	ARK.	061613	95	215
		SIGNALIZATION PLAN SHEET				

STATE OF ARKANSAS
LICENSED PROFESSIONAL ENGINEER
No. 11425
TRINITY D. SMITH

Aug 16 2023 3:30 PM

DocuSign

STAGES 1 & 2 PHASING DIAGRAM

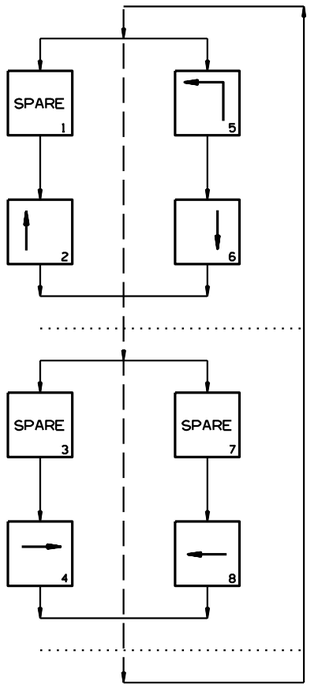

STAGES 1 & 2 SIGNAL FACES

12" LENSES

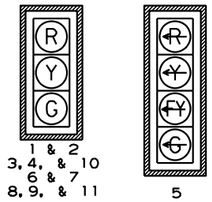

NOTES:
1. ALL SIGNAL HEADS SHALL HAVE BACKPLATES.
2. REFER TO SPECIAL PROVISION "RETROREFLECTIVE BACKPLATES" FOR DETAILS ON REQUIREMENTS FOR BACKPLATES.

STAGES 1 & 2 DETECTOR CHART

DETECTOR SYSTEM DESCRIPTION: JOB 061613											
HIGHWAY 31 AND BROWNSVILLE LOOP ROAD/DEE DEE LANE DETECTOR ASSIGNMENTS				HARDWARE INPUTS BY SUPPLIER			PROGRAM ASSIGNMENTS			COMMENTS	TUBE LENGTHS
							LOCAL		MASTER SYSTEM DETECTOR NUMBERS		
DET. ID #	LOCATION DIRECTION	TYPE	DET. #	CAB. TRM. #	AMP CHN. #	CON. IMP. #	PHS	SYSTEM DET. #			
Vz21	NB ADVANCE	LOCAL			5	V2	2			CAMERA V2	23"
Vz22	NB NEAR	COMB.			6	V10	2	2		CAMERA V2	23"
Vz41	EB ADVANCE	LOCAL			9	V4	4			CAMERA V4	23"
Vz42	EB NEAR	COMB.			10	V12	4	4		CAMERA V4	23"
Vz51	NB LEFT TURN FAR	COMB.			7	V13	5	5		CAMERA V2	23"
Vz52	NB LEFT TURN	LOCAL			8	V5	5			CAMERA V2	23"
Vz61	SB ADVANCE	LOCAL			3	V6	6			CAMERA V6	23"
Vz62	SB NEAR	COMB.			4	V14	6	6		CAMERA V6	23"
Vz81	WB ADVANCE	LOCAL			11	V8	8			CAMERA V8	23"
Vz82	WB NEAR	COMB.			12	V16	8	8		CAMERA V8	23"
					SPARE 1-2, 13-16						

CONTROLLER INPUT ABBREVIATIONS:
V = VEHICLE INPUT
D = SYSTEM OR AUXILIARY INPUT
P = PEDESTRIAN INPUT

NOTE: "AMP CHN =" REFERS TO THE RACK OUTPUT POSITION.
THIS IS WIRED TO CONTROLLER INPUT DETECTOR NUMBER WHICH IS PROGRAMMED TO ACTUATE THE DESIGNATED PHASE.
EXAMPLE. V9 = SYSTEM DETECTOR 1, V10 = SYSTEM DETECTOR 2

STAGES 1 & 2 INTERVAL CHART

SIGNAL FACES	HIGHWAY 31/DEE DEE LANE AND HIGHWAY 31 /BROWNSVILLE LOOP ROAD 2+5	CLR.	2+6	CLR.	4+8	CLR.		FLASH SEQUENCE
1 & 2	R	R	G	Y	R	R		R
3, 4, & 10	R	R	R	R	G	Y		R
5	~~G~~	Y	~~FY~~	***	~~R~~	~~R~~		~~R~~
6 & 7	G	**	G	**	R	R		R
8, 9, & 11	R	R	R	R	G	Y		R

* DENOTES GREEN OR YELLOW ARROW DEPENDING ON NEXT PHASE
** DENOTES GREEN OR YELLOW BALL DEPENDING ON NEXT PHASE
*** DENOTES FLASHING YELLOW ARROW OR YELLOW ARROW DEPENDING ON NEXT PHASE

DATE: 07-24-2023 FILE NAME: t061613_02.dgn

LOCATION: HIGHWAY 31 AND DEE DEE LANE / BROWNSVILLE LOOP
CITY: LONOKE
COUNTY: LONOKE
DISTRICT: 6 SCALE: N/A DRAWN BY: JDH

T061613_02.DGN 7/24/2023

DATE REVISED	DATE REVISED	FED.RD. DIST.NO.	STATE	JOB NO.	SHEET NO.	TOTAL SHEETS
		6	ARK.	061613	96	215
		SIGNALIZATION PLAN SHEET				

STATE OF ARKANSAS
LICENSED PROFESSIONAL ENGINEER
No. 11425
TRINITY D. SMITH

Aug 16 2023 3:30 PM

DocuSign

STAGES 1 & 2 PHASING DIAGRAM

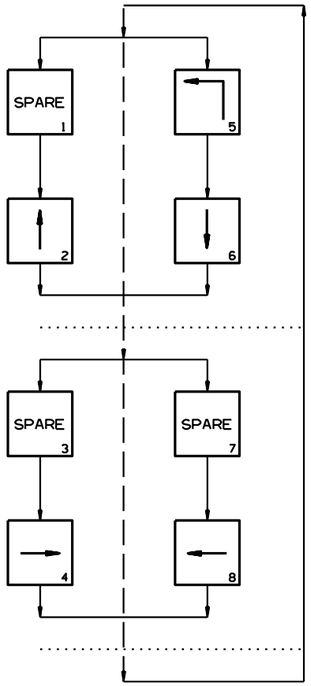

STAGES 1 & 2 SIGNAL FACES

12" LENSES

NOTES:
1. ALL SIGNAL HEADS SHALL HAVE BACKPLATES.
2. REFER TO SPECIAL PROVISION "RETROREFLECTIVE BACKPLATES" FOR DETAILS ON REQUIREMENTS FOR BACKPLATES.

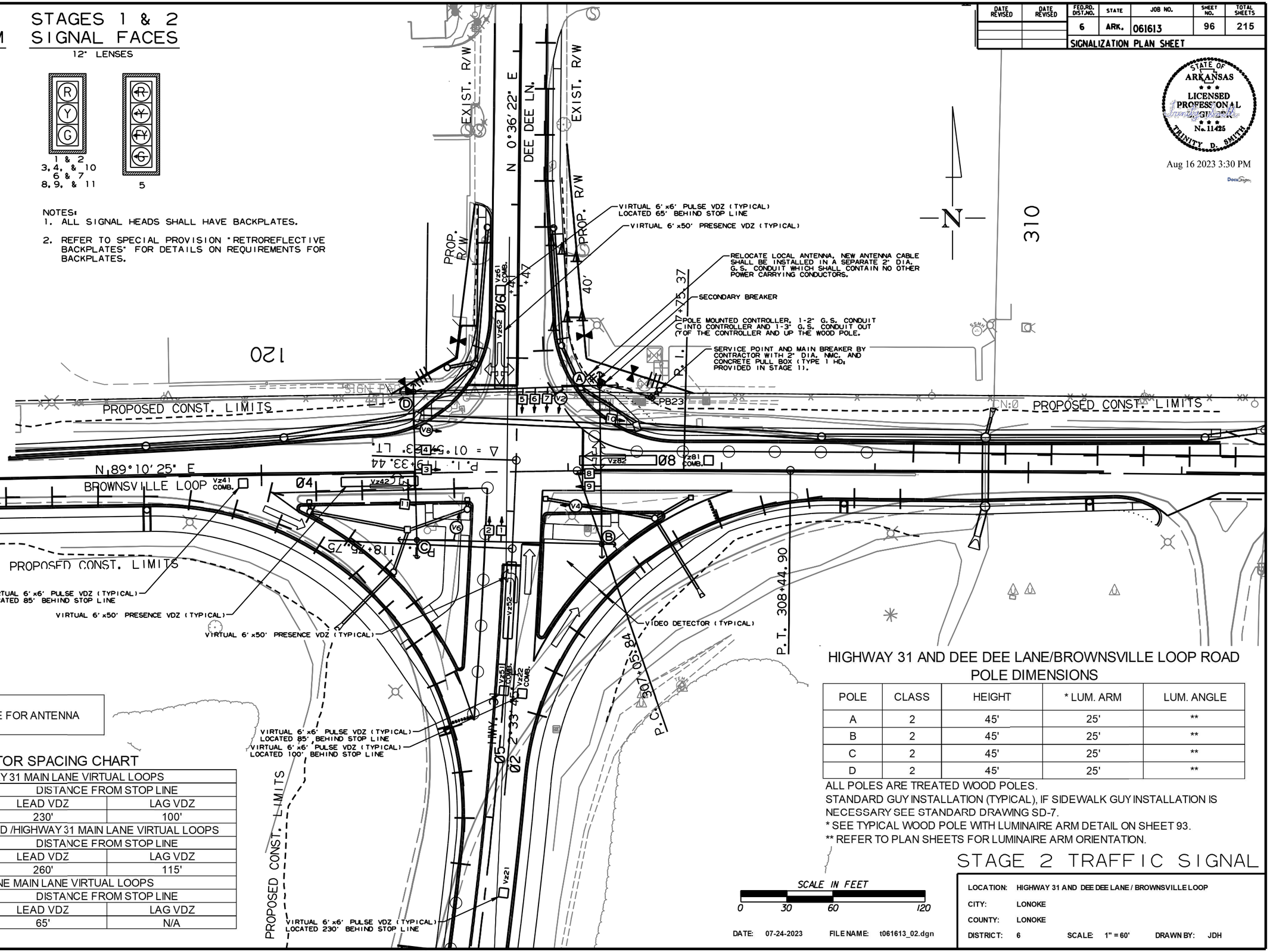

NOTE TO CONTRACTOR:
CONTACT THE CITY OF LONOKE FOR ANTENNA ORIENTATION.

DETECTOR SPACING CHART

ARDOT HIGHWAY 31 MAIN LANE VIRTUAL LOOPS		
POSTED SPEED	DISTANCE FROM STOP LINE	
	LEAD VDZ	LAG VDZ
40 MPH	230'	100'
BROWNSVILLE LOOP ROAD /HIGHWAY 31 MAIN LANE VIRTUAL LOOPS		
POSTED SPEED	DISTANCE FROM STOP LINE	
	LEAD VDZ	LAG VDZ
45 MPH	260'	115'
DEE DEE LANE MAIN LANE VIRTUAL LOOPS		
POSTED SPEED	DISTANCE FROM STOP LINE	
	LEAD VDZ	LAG VDZ
25 MPH	65'	N/A

HIGHWAY 31 AND DEE DEE LANE/BROWNSVILLE LOOP ROAD POLE DIMENSIONS

POLE	CLASS	HEIGHT	* LUM. ARM	LUM. ANGLE
A	2	45'	25'	**
B	2	45'	25'	**
C	2	45'	25'	**
D	2	45'	25'	**

ALL POLES ARE TREATED WOOD POLES.
STANDARD GUY INSTALLATION (TYPICAL), IF SIDEWALK GUY INSTALLATION IS NECESSARY SEE STANDARD DRAWING SD-7.
* SEE TYPICAL WOOD POLE WITH LUMINAIRE ARM DETAIL ON SHEET 93.
** REFER TO PLAN SHEETS FOR LUMINAIRE ARM ORIENTATION.

SCALE IN FEET
0 30 60 120

DATE: 07-24-2023 FILE NAME: t061613_02.dgn

STAGE 2 TRAFFIC SIGNAL

LOCATION: HIGHWAY 31 AND DEE DEE LANE / BROWNSVILLE LOOP
CITY: LONOKE
COUNTY: LONOKE
DISTRICT: 6 SCALE: 1" = 60' DRAWN BY: JDH

T061613_02.DGN 7/24/2023

DATE REVISED	DATE REVISED	FED.RD. DIST.NO.	STATE	JOB NO.	SHEET NO.	TOTAL SHEETS
		6	ARK.	061613	97	215
		SIGNALIZATION PLAN SHEET				

STATE OF ARKANSAS
LICENSED PROFESSIONAL ENGINEER
No. 11425
TRINITY D. SMITH

Aug 16 2023 3:30 PM

DocuSign

HIGHWAY 31 AND DEE DEE LANE/BROWNSVILLE LOOP ROAD
TEMPORARY POLE LOCATIONS

POLE	LOCATION & STATION	OFFSET	X, Y COORDINATES
A	HWY. 31 - STA. 119+82.58	53.78' RT.	1345978.60, 2090955.13
B	HWY. 31 - STA. 118+81.30	58.09' RT.	1345980.01, 2090851.88
C	HWY. 31 - STA. 118+78.59	62.44' LT.	1345859.47, 2090854.56
D	HWY. 31 - STA. 119+77.39	67.48' LT.	1345857.29, 2090951.23

NOTE TO CONTRACTOR:
TRAFFIC SIGNAL OPERATIONS SHALL BE MAINTAINED THROUGHOUT ALL CONSTRUCTION PHASES.

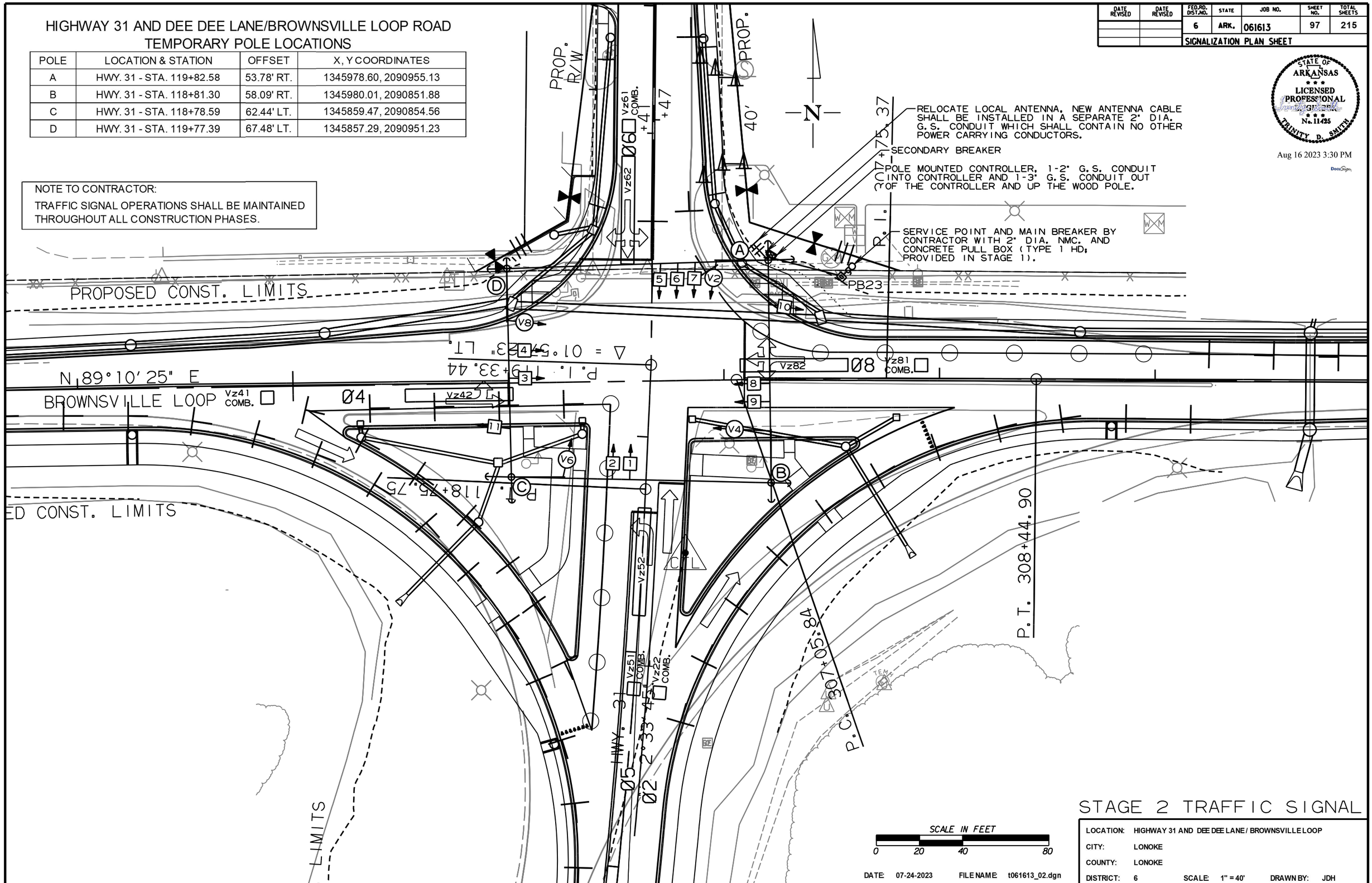

STAGE 2 TRAFFIC SIGNAL

LOCATION:	HIGHWAY 31 AND DEE DEE LANE / BROWNSVILLE LOOP		
CITY:	LONOKE		
COUNTY:	LONOKE		
DISTRICT: 6	SCALE: 1" = 40'	DRAWN BY:	JDH

DATE: 07-24-2023 FILE NAME: t061613_02.dgn

T061613_02.DGN 7/24/2023

DATE REVISED	DATE REVISED	FED.RD. DIST.NO.	STATE	JOB NO.	SHEET NO.	TOTAL SHEETS
		6	ARK.	061613	98	215
		SIGNALIZATION PLAN SHEET				

STATE OF ARKANSAS
LICENSED PROFESSIONAL ENGINEER
No. 11425
TRINITY D. SMITH

Aug 16 2023 3:30 PM

DocuSign

PHASING DIAGRAM

SIGNAL FACES

12" LENSES

ONE SECTION (SOLID SYMBOL)

15 & 16
17 & 18
19 & 20
21 & 22

NOTES:
1. ALL SIGNAL HEADS SHALL HAVE BACKPLATES.
2. REFER TO SPECIAL PROVISION "RETROREFLECTIVE BACKPLATES" FOR DETAILS ON REQUIREMENTS FOR BACKPLATES.
3. REFER TO SPECIAL PROVISIONS FOR DETAILS ON REQUIREMENTS FOR PEDESTRIAN SIGNAL HEADS.
4. ALL PEDESTRIAN SIGNAL HEADS CAN BE PLACED INTO OPERATION IF THERE ARE BOTH WHEELCHAIR RAMPS AND A CROSSWALK THAT MEETS A.D.A.S. STANDARD.

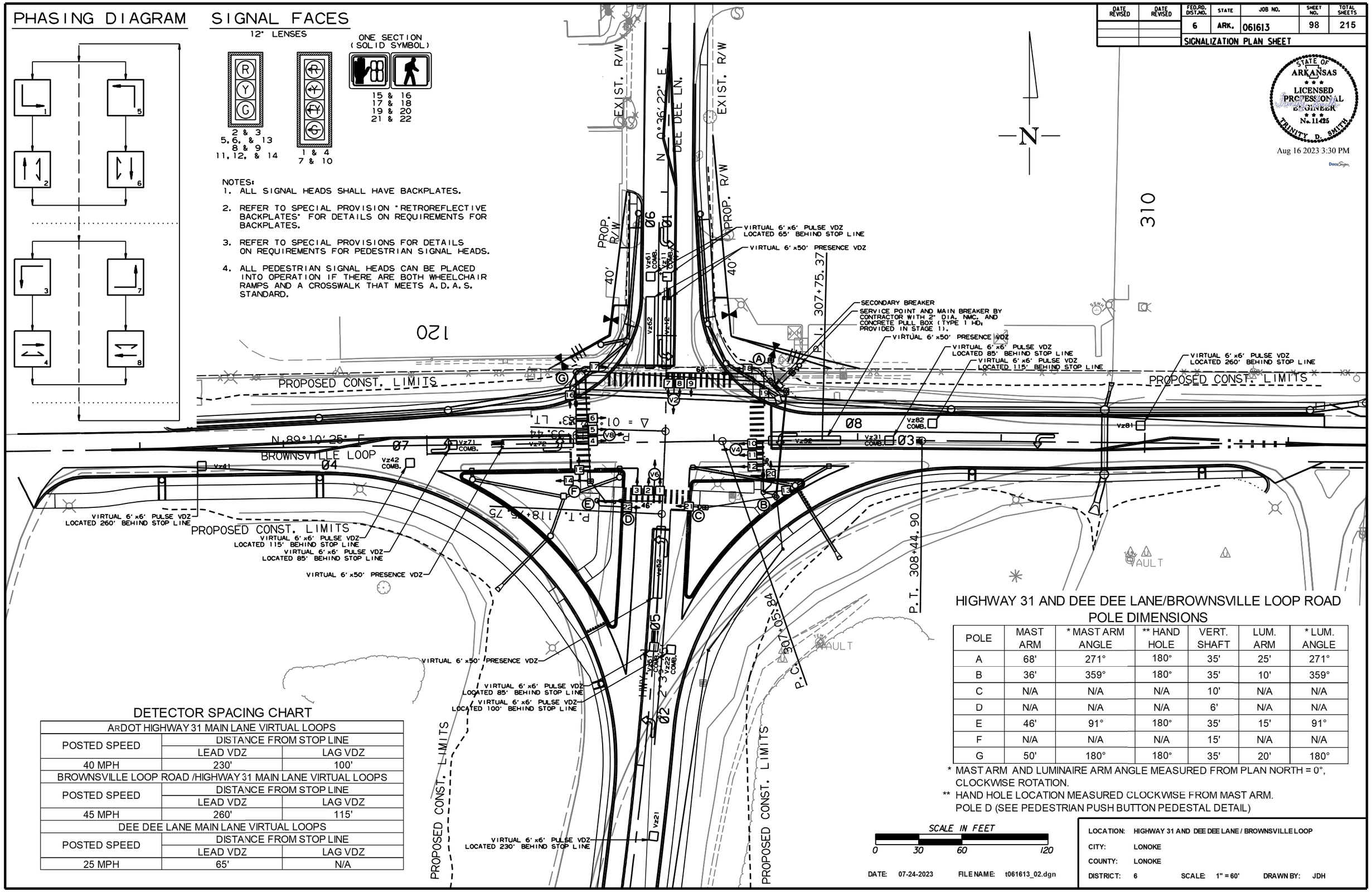

HIGHWAY 31 AND DEE DEE LANE/BROWNSVILLE LOOP ROAD POLE DIMENSIONS

POLE	MAST ARM	* MAST ARM ANGLE	** HAND HOLE	VERT. SHAFT	LUM. ARM	* LUM. ANGLE
A	68'	271°	180°	35'	25'	271°
B	36'	359°	180°	35'	10'	359°
C	N/A	N/A	N/A	10'	N/A	N/A
D	N/A	N/A	N/A	6'	N/A	N/A
E	46'	91°	180°	35'	15'	91°
F	N/A	N/A	N/A	15'	N/A	N/A
G	50'	180°	180°	35'	20'	180°

* MAST ARM AND LUMINAIRE ARM ANGLE MEASURED FROM PLAN NORTH = 0°, CLOCKWISE ROTATION.

** HAND HOLE LOCATION MEASURED CLOCKWISE FROM MAST ARM. POLE D (SEE PEDESTRIAN PUSH BUTTON PEDESTAL DETAIL)

DETECTOR SPACING CHART

ARDOT HIGHWAY 31 MAIN LANE VIRTUAL LOOPS		
POSTED SPEED	DISTANCE FROM STOP LINE	
	LEAD VDZ	LAG VDZ
40 MPH	230'	100'
BROWNSVILLE LOOP ROAD /HIGHWAY 31 MAIN LANE VIRTUAL LOOPS		
POSTED SPEED	DISTANCE FROM STOP LINE	
	LEAD VDZ	LAG VDZ
45 MPH	260'	115'
DEE DEE LANE MAIN LANE VIRTUAL LOOPS		
POSTED SPEED	DISTANCE FROM STOP LINE	
	LEAD VDZ	LAG VDZ
25 MPH	65'	N/A

SCALE IN FEET
0 30 60 120

DATE: 07-24-2023 FILE NAME: t061613_02.dgn

LOCATION: HIGHWAY 31 AND DEE DEE LANE / BROWNSVILLE LOOP
CITY: LONOKE
COUNTY: LONOKE
DISTRICT: 6 SCALE: 1" = 60' DRAWN BY: JDH

T061613_02.DGN 7/24/2023

DATE REVISED	DATE REVISED	FED.RD. DIST.NO.	STATE	JOB NO.	SHEET NO.	TOTAL SHEETS
		6	ARK.	061613	99	215
		SIGNALIZATION PLAN SHEET				

HIGHWAY 31 AND DEE DEE LANE/BROWNSVILLE LOOP ROAD

POLE LOCATIONS

POLE	LOCATION & STATION	OFFSET	X, Y COORDINATES
A	HWY. 31 - STA. 119+74.14	67.79' RT.	1345992.52, 2090946.54
B	HWY. 31 - STA. 118+94.00	70.02' RT.	1345992.49, 2090864.03
C	HWY. 31 - STA. 118+81.75	26.00' RT.	1345947.97, 2090853.76
D	HWY. 31 - STA. 118+82.25	33.25' LT.	1345888.80, 2090856.91
E	HWY. 31 - STA. 118+83.00	45.50' LT.	1345876.59, 2090858.21
F	HWY. 31 - STA. 118+96.43	58.45' LT.	1345864.26, 2090872.20
G	HWY. 31 - STA. 119+73.91	62.96' LT.	1345861.77, 2090947.70

TOP OF POLE FOUNDATION ELEVATION SHALL BE THREE (3) INCHES ABOVE THE FINISHED SURFACE ELEVATION AT THE LOCATIONS SHOWN ABOVE.
TOP OF POLE FOUNDATION ELEVATION MAY BE INCREASED IN ACCORDANCE WITH STANDARD DRAWING SD-11.
POLE D (SEE PEDESTRIAN PUSH BUTTON PEDESTAL DETAIL).

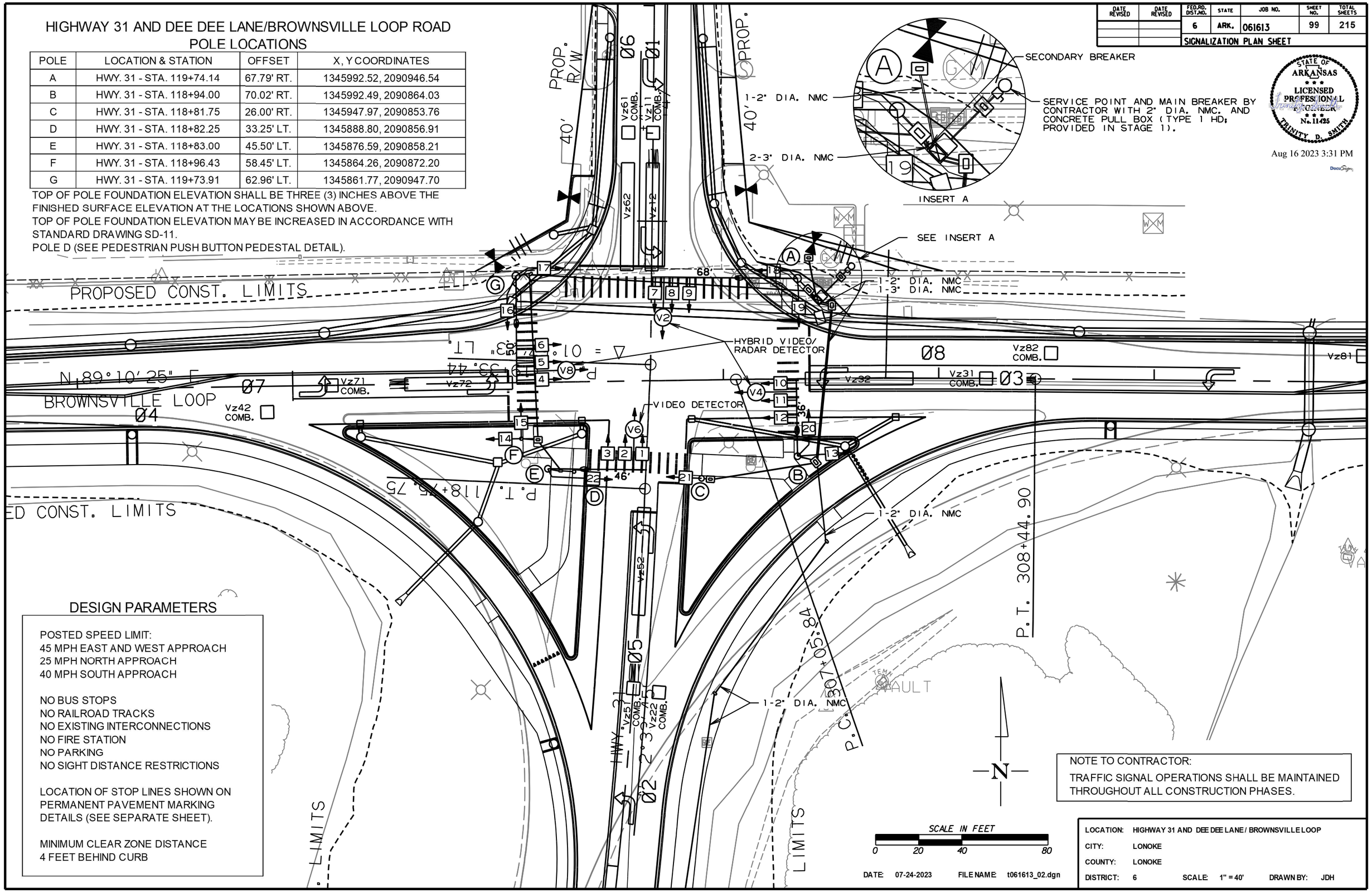

DESIGN PARAMETERS

POSTED SPEED LIMIT:
45 MPH EAST AND WEST APPROACH
25 MPH NORTH APPROACH
40 MPH SOUTH APPROACH

NO BUS STOPS
NO RAILROAD TRACKS
NO EXISTING INTERCONNECTIONS
NO FIRE STATION
NO PARKING
NO SIGHT DISTANCE RESTRICTIONS

LOCATION OF STOP LINES SHOWN ON PERMANENT PAVEMENT MARKING DETAILS (SEE SEPARATE SHEET).

MINIMUM CLEAR ZONE DISTANCE
4 FEET BEHIND CURB

NOTE TO CONTRACTOR:
TRAFFIC SIGNAL OPERATIONS SHALL BE MAINTAINED THROUGHOUT ALL CONSTRUCTION PHASES.

SCALE IN FEET
0 20 40 80

DATE: 07-24-2023 FILE NAME: t061613_02.dgn

LOCATION:	HIGHWAY 31 AND DEE DEE LANE / BROWNSVILLE LOOP		
CITY:	LONOKE		
COUNTY:	LONOKE		
DISTRICT:	6	SCALE: 1" = 40'	DRAWN BY: JDH

STATE OF ARKANSAS
LICENSED PROFESSIONAL ENGINEER
No. 11425
TRINITY D. SMITH

Aug 16 2023 3:31 PM
DocuSign

T061613_02.DGN 7/24/2023

DATE REVISED	DATE REVISED	FED.RD. DIST.NO.	STATE	JOB NO.	SHEET NO.	TOTAL SHEETS
		6	ARK.	061613	100	215
		SIGNALIZATION PLAN SHEET				

STATE OF ARKANSAS
LICENSED PROFESSIONAL ENGINEER
No. 11425
TRINITY D. SMITH

Aug 16 2023 3:31 PM

DocuSign

HIGHWAY 31 AND DEE DEE LANE/BROWNSVILLE LOOP ROAD
PULL BOX LOCATIONS

PULL BOX	TYPE	LOCATION & STATION	* OFFSET	* X, Y COORDINATES
PB_ITS2	2 HD	HWY. 31 - STA. 119+83.77	72.89' RT.	1345997.72, 2090956.12
PB13	SEE NOTES TO CONTRACTOR			
PB14	3	HWY. 31 - STA. 113+50.43	33.73' RT.	1345889.35, 2090321.39
PB15	3	HWY. 31 - STA. 117+83.39	37.97' RT.	1345954.16, 2090753.97
PB16	3	HWY. 31 - STA. 118+55.73	85.47' RT.	1346006.13, 2090824.59
PB17	3 HD	HWY. 31 - STA. 118+91.62	78.63' RT.	1346000.99, 2090861.27
PB18	2 HD	HWY. 31 - STA. 118+81.54	30.15' RT.	1345952.10, 2090853.37
PB19	2	HWY. 31 - STA. 118+82.29	39.52' LT.	1345882.53, 2090857.23
PB20	2 HD	HWY. 31 - STA. 118+96.28	50.66' LT.	1345872.03, 2090871.70
PB21	2	HWY. 31 - STA. 119+74.91	56.10' LT.	1345868.64, 2090948.63
PB22	3 HD	HWY. 31 - STA. 119+68.83	73.05' RT.	1345997.72, 2090941.18
PB23	1 HD	HWY. 31 - STA. 119+75.15	87.90' RT.	1346012.64, 2090947.35
PB24	3 HD	HWY. 31 - STA. 119+61.87	83.89' RT.	1346008.49, 2090934.11

* CENTER OF PULL BOX
ALL PULL BOXES SHALL BE PLACED AT THE FINISHED SURFACE ELEVATION.
PB23 INSTALLED IN STAGE 1

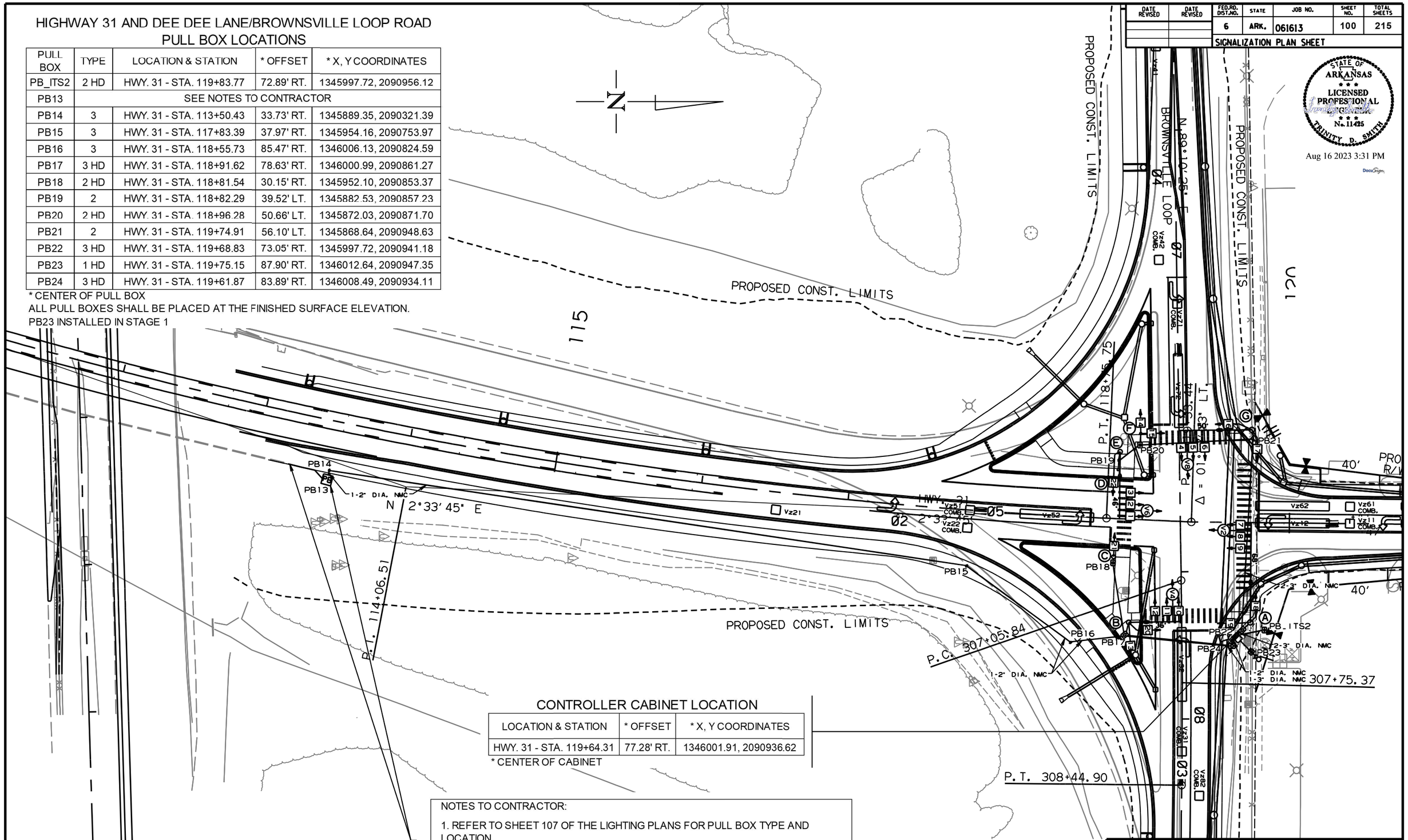

CONTROLLER CABINET LOCATION

LOCATION & STATION	* OFFSET	* X, Y COORDINATES
HWY. 31 - STA. 119+64.31	77.28' RT.	1346001.91, 2090936.62

* CENTER OF CABINET

NOTES TO CONTRACTOR:

1. REFER TO SHEET 107 OF THE LIGHTING PLANS FOR PULL BOX TYPE AND LOCATION.
2. REFER TO SHEET 107 OF THE LIGHTING PLANS AND SHEET 126 OF BRIDGE PLANS FOR CONDUIT INFORMATION.

SCALE IN FEET
0 30 60 120

DATE: 07-24-2023 FILE NAME: t061613_02.dgn

LOCATION: HIGHWAY 31 AND DEE DEE LANE / BROWNSVILLE LOOP
CITY: LONOKE
COUNTY: LONOKE
DISTRICT: 6 SCALE: N/A DRAWN BY: JDH

T061613_02.DGN 7/24/2023

DATE REVISED	DATE REVISED	FED.RD. DIST.NO.	STATE	JOB NO.	SHEET NO.	TOTAL SHEETS
		6	ARK.	061613	101	215
		SIGNALIZATION PLAN SHEET				

STATE OF ARKANSAS
LICENSED PROFESSIONAL ENGINEER
No. 11425
TRINITY D. SMITH

Aug 16 2023 3:31 PM

DocuSign

WIRING DIAGRAM

NOTES TO CONTRACTOR:

1. ONE SEPARATE 1-5c IS RUN TO EACH POLE FOR THE PEDESTRIAN PUSH BUTTON.
2. ALL DETECTOR RACK CHANNELS, INCLUDING UNUSED, SHALL BE BROUGHT TO TERMINAL STRIP IN DETECTOR AREA OF CABINET.
3. THE LOCAL GOVERNMENT SHALL BE RESPONSIBLE FOR PROVIDING POWER TO THE SERVICE POINT.
4. SEE SHEET NUMBER 77 FOR GROUNDING ARRAY DETAIL.

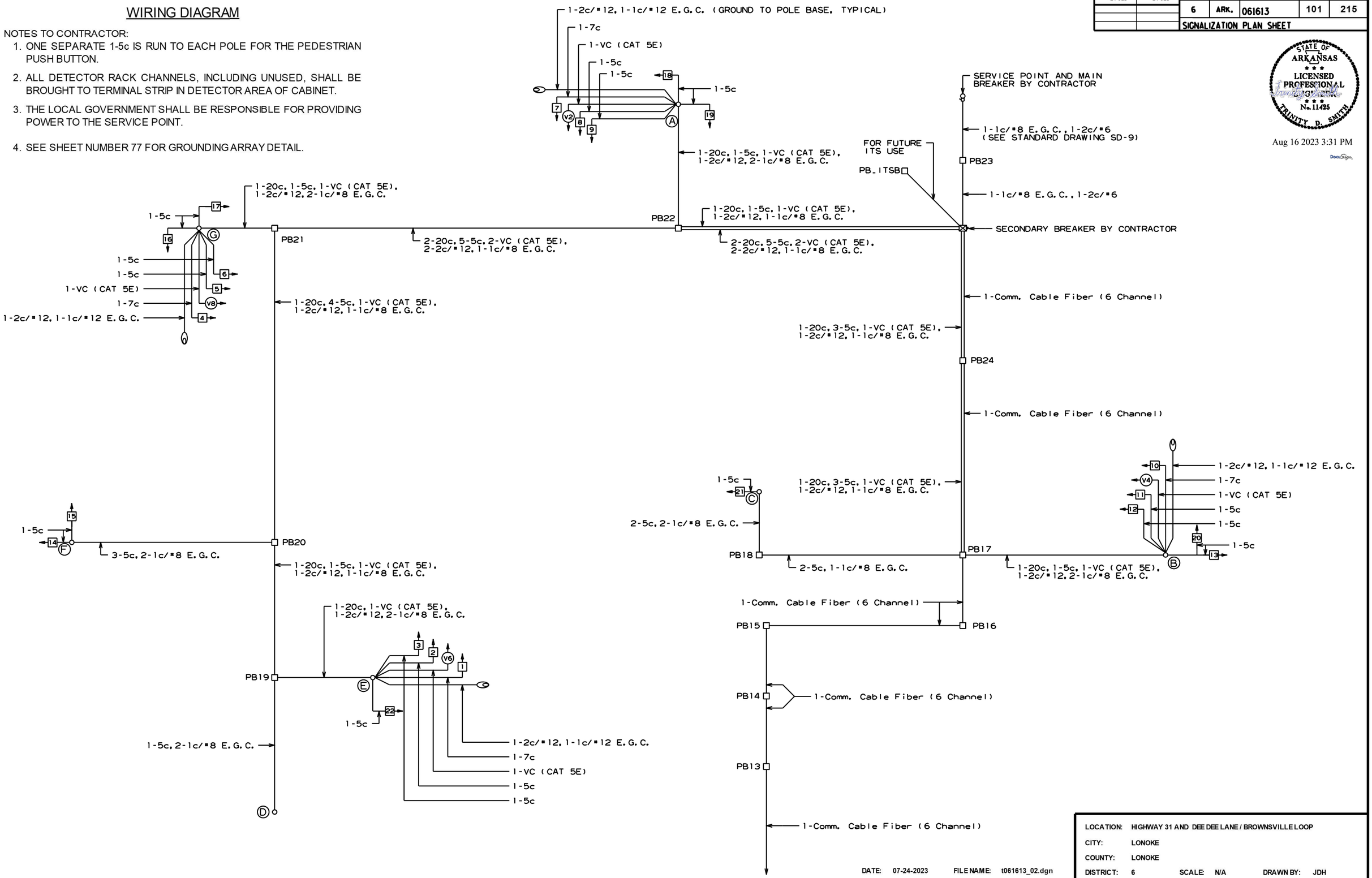

LOCATION:	HIGHWAY 31 AND DEE DEE LANE / BROWNSVILLE LOOP		
CITY:	LONOKE		
COUNTY:	LONOKE		
DISTRICT: 6	SCALE: N/A	DRAWN BY: JDH	

DATE: 07-24-2023 FILE NAME: t061613_02.dgn

T061613_02.DGN 7/24/2023

DATE REVISED	DATE REVISED	FED.RD. DIST.NO.	STATE	JOB NO.	SHEET NO.	TOTAL SHEETS
		6	ARK.	061613	102	215
		SIGNALIZATION PLAN SHEET				

STATE OF ARKANSAS
LICENSED PROFESSIONAL ENGINEER
No. 11425
TRINITY D. SMITH

Aug 16 2023 3:31 PM

DocuSign

PHASING DIAGRAM

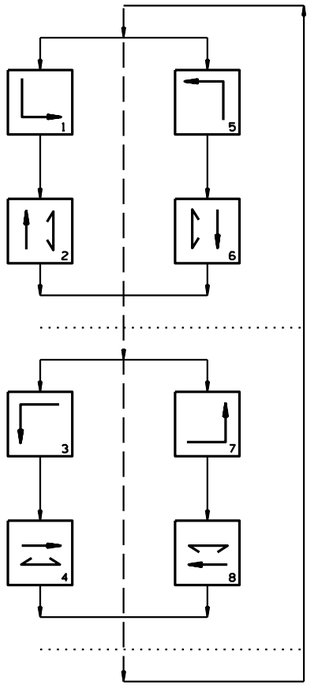

SIGNAL FACES

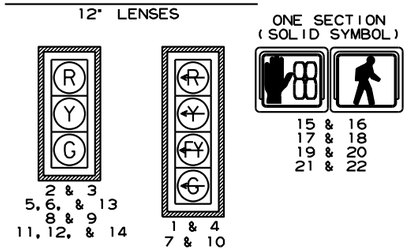

NOTES:
1. ALL SIGNAL HEADS SHALL HAVE BACKPLATES.
2. REFER TO SPECIAL PROVISION "RETROREFLECTIVE BACKPLATES" FOR DETAILS ON REQUIREMENTS FOR BACKPLATES.
3. REFER TO SPECIAL PROVISIONS FOR DETAILS ON REQUIREMENTS FOR PEDESTRIAN SIGNAL HEADS.
4. ALL PEDESTRIAN SIGNAL HEADS CAN BE PLACED INTO OPERATION IF THERE ARE BOTH WHEELCHAIR RAMPS AND A CROSSWALK THAT MEETS A.D.A.S. STANDARD.

DETECTOR CHART

DETECTOR SYSTEM DESCRIPTION: JOB 061613											
HIGHWAY 31 AND BROWNSVILLE LOOP ROAD/DEE DEE LANE DETECTOR ASSIGNMENTS				HARDWARE INPUTS BY SUPPLIER			PROGRAM ASSIGNMENTS			COMMENTS	TUBE LENGTHS
							LOCAL		MASTER SYSTEM DETECTOR NUMBERS		
DET. ID #	LOCATION DIRECTION	TYPE	DET. #	CAB. TRM. #	AMP CHN. #	CON. IMP. #	PHS	SYSTEM DET. #			
Vz11	SB LEFT TURN FAR	COMB.				V9	1	1		CAMERA V6	37'
Vz12	SB LEFT TURN	LOCAL				V1	1			CAMERA V6	37'
Vz21	NB ADVANCE	LOCAL				V2	2			CAMERA V2	23"
Vz22	NB NEAR	COMB.				V10	2	2		CAMERA V2	23"
Vz31	WB LEFT TURN FAR	COMB.				V11	3	3		CAMERA V8	23"
Vz32	WB LEFT TURN	LOCAL				V3	3			CAMERA V8	23"
Vz41	EB ADVANCE	LOCAL				V4	4			CAMERA V4	23"
Vz42	EB NEAR	COMB.				V12	4	4		CAMERA V4	23"
Vz51	NB LEFT TURN FAR	COMB.				V13	5	5		CAMERA V2	23"
Vz52	NB LEFT TURN	LOCAL				V5	5			CAMERA V2	23"
Vz61	SB ADVANCE	LOCAL				V6	6			CAMERA V6	37'
Vz62	SB NEAR	COMB.				V14	6	6		CAMERA V6	37'
Vz71	EB LEFT TURN FAR	COMB.				V15	7	7		CAMERA V4	23"
Vz72	EB LEFT TURN	LOCAL				V7	7			CAMERA V4	23"
Vz81	WB ADVANCE	LOCAL				V8	8			CAMERA V8	23"
Vz82	WB NEAR	COMB.				V16	8	8		CAMERA V8	23"
PB2 A&B	HWY. 31 E. LEG	PED.				P2	2				
PB4 A&B	HWY. 31 S. LEG	PED.				P4	4				
PB6 A&B	BROWNSVILLE LOOP RD. W. LEG	PED.				P6	6				
PB8 A&B	DEE DEE LANE N. LEG	PED.				P8	8				
					SPARE						

CONTROLLER INPUT ABBREVIATIONS:
V = VEHICLE INPUT
D = SYSTEM OR AUXILIARY INPUT
P = PEDESTRIAN INPUT

NOTE: "AMP CHN =" REFERS TO THE RACK OUTPUT POSITION.
THIS IS WIRED TO CONTROLLER INPUT DETECTOR NUMBER WHICH IS PROGRAMMED TO ACTUATE THE DESIGNATED PHASE.
EXAMPLE: V9 = SYSTEM DETECTOR 1, V10 = SYSTEM DETECTOR 2

INTERVAL CHART

SIGNAL FACES	HIGHWAY 31/DEE DEE LANE AND HIGHWAY 31/BROWNSVILLE LOOP ROAD																FLASH SEQUENCE
	1+5	CLR.	1+6	CLR.	2+5	CLR.	2+6	CLR.	3+7	CLR.	3+8	CLR.	4+7	CLR.	4+8	CLR.	
1	~~G~~	*	~~G~~	*	~~FY~~	***	~~FY~~	***	~~R~~	~~R~~	~~R~~	~~R~~	~~R~~	~~R~~	~~R~~	~~R~~	~~R~~
2 & 3	R	R	G	**	R	R	G	**	R	R	R	R	R	R	R	R	R
4	~~R~~	~~R~~	~~R~~	~~R~~	~~R~~	~~R~~	~~R~~	~~R~~	~~G~~	*	~~G~~	*	~~FY~~	***	~~FY~~	***	~~R~~
5, 6, & 13	R	R	R	R	R	R	R	R	R	R	G	**	R	R	G	**	R
7	~~G~~	*	~~FY~~	***	~~G~~	*	~~FY~~	***	~~R~~	~~R~~	~~R~~	~~R~~	~~R~~	~~R~~	~~R~~	~~R~~	~~R~~
8 & 9	R	R	R	R	G	**	G	**	R	R	R	R	R	R	R	R	R
10	~~R~~	~~R~~	~~R~~	~~R~~	~~R~~	~~R~~	~~R~~	~~R~~	~~G~~	*	~~FY~~	***	~~G~~	*	~~FY~~	***	~~R~~
11, 12, & 14	R	R	R	R	R	R	R	R	R	R	R	R	G	**	G	**	R
15 & 16	DW	DW	W	FDW	DW	DW	W	FDW	DW	DW	DW	DW	DW	DW	DW	DW	BLK
17 & 18	DW	DW	DW	DW	DW	DW	DW	DW	DW	DW	W	FDW	DW	DW	W	FDW	BLK
19 & 20	DW	DW	DW	DW	W	FDW	W	FDW	DW	DW	DW	DW	DW	DW	DW	DW	BLK
21 & 22	DW	DW	DW	DW	DW	DW	DW	DW	DW	DW	DW	DW	W	FDW	W	FDW	BLK

* DENOTES GREEN OR YELLOW ARROW DEPENDING ON NEXT PHASE
** DENOTES GREEN OR YELLOW BALL DEPENDING ON NEXT PHASE
*** DENOTES FLASHING YELLOW ARROW OR YELLOW ARROW DEPENDING ON NEXT PHASE

DATE: 07-24-2023 FILE NAME: t061613_02.dgn

LOCATION: HIGHWAY 31 AND DEE DEE LANE / BROWNSVILLE LOOP
CITY: LONOKE
COUNTY: LONOKE
DISTRICT: 6 SCALE: N/A DRAWN BY: JDH

7/24/2023

T061613_02.DGN

DATE REVISED	DATE FILMED	DATE REVISED	DATE FILMED	FED. RD. DIST. NO.	STATE	FED. AID PROJ. NO.	SHEET NO.	TOTAL SHEETS
				6	ARK.			
				JOB NO.		061613	103	215

(2) ELECTRICAL LEGEND & NOTES

STATE OF ARKANSAS
LICENSED PROFESSIONAL ENGINEER
No. 21040

Digitally Signed 07/21/2023

ELECTRICAL SYMBOLS LEGEND

- TRANSFORMER, RATINGS AS SHOWN
- INSTALL NEW ELECTRICAL CONDUIT WITH ROADWAY LIGHTING CIRCUIT, TRENCHED (1-WAY 2"C UNLESS OTHERWISE NOTED)
- INSTALL NEW EMPTY DUCT BANK FOR FUTURE USE BY OTHERS, MOUNTED IN BRIDGE RAIL (1-WAY 2"C UNLESS OTHERWISE NOTED)
- INSTALL NEW LUMINAIRE, SINGLE 8' MAST ARM, LIGHT POLE, AND FOUNDATION, UON
- PB — PULL BOX
- CONDUIT STUBOUT
- OR — 3/4" x 10' COPPER CLAD GROUND ROD.

ABBREVIATIONS

A	AMP
ABC	ABOVE COUNTER
ACS	ACCESS CONTROL SYSTEM
ACU	AIR CONDITIONING UNIT
AHU	AIR HANDLING UNIT
AIC	AMPS INTERRUPTING CAPACITY
AM	AMP-METER
ANN	ANNUNCIATOR
AP	AERIAL PRIMARY
AS	AERIAL SECONDARY
ATS	AUTOMATIC TRANSFER SWITCH
AUX	AUXILIARY
BFI	BLOWN FUSE INDICATOR
BI	BYPASS ISOLATION
BKR	BREAKER
C	CONDUIT
CB	CIRCUIT BREAKER
CCTV	CLOSED CIRCUIT TELEVISION
CGRS	PVC COATED GALVANIZED RIGID STEEL
CKT	CIRCUIT
COM	COMMON
CONT	CONTINUOUS
CP	CONTROL PANEL
CPT	CONTROL POWER TRANSFORMER
CR	CONTROL RELAY
CRI	COLOR RENDERING INDEX
CS	CORD SET
CU	COEFFICIENT OF UTILIZATION
DEB	DIRECT EARTH BURIED
EC	EMPTY OR EMBEDDED CONDUIT
EF	EXHAUST FAN
EG	EQUIPMENT GROUND
EL	ELEVATION
EMT	ELECTRICAL METALLIC TUBING
ETM	ELASPED TIME METER
FC	FAN COIL
FDS	FUSED DISCONNECT SWITCH
FOC	FIBER OPTIC CABLE
FVNR	FULL VOLTAGE NON-REVERSING STARTER
FVR	FULL VOLTAGE REVERSING STARTER
GFCI	GROUND FAULT CIRCUIT INTERRUPTER
GND	GROUND
GRS	GALVANIZED RIGID STEEL
HID	HIGH INTENSITY DISCHARGE
HOA	HAND-OFF-AUTO
HP	HORSEPOWER OR HEAT PUMP
IDS	INTRUSION DETECTION SYSTEM
HR	HOUR
IG	ISOLATED GROUND
ISP	INDIVIDUALLY SHIELDED PAIR
JB	JUNCTION BOX
kVA	KILOVOLT-AMPERE
kVAR	KILOVOLT-AMPERE, REACTIVE
kW	KILOWATT
LA	LIGHTNING ARRESTER
LC	LIGHTING CONTACTOR
LLF	LIGHT LOSS FACTOR
LO	LUGS ONLY
LOR	LOCAL-OFF-REMOTE
LSI	LONG, SHORT, INSTANTANEOUS
LSIG	LONG, SHORT, INSTANTANEOUS, GROUND
LV	LOW VOLTAGE
MCB	MAIN CIRCUIT BREAKER
MCC	MOTOR CONTROL CENTER
MCP	MOTOR CIRCUIT PROTECTOR
MFR	MANUFACTURER
MIN	MINIMUM
MLO	MAIN LUGS ONLY
MN	MASS NOTIFICATION
MON	MONACO
MS	MOTOR STARTER
MTS	MANUAL TRANSFER SWITCH
N	NEUTRAL
NFDS	NON-FUSED DISCONNECT SWITCH
NL	NIGHT LIGHT
OH	OVERHEAD
OHP	OVERHEAD PRIMARY
OHS	OVERHEAD SECONDARY
OL	OVERLOAD
PB	PUSH BUTTON
PEC	PHOTO ELECTRIC CELL
PF	POWER FACTOR
PFCC	POWER FACTOR CORRECTION CAPACITOR
PL	PILOT LIGHT
PMR	PHASE MONITOR RELAY
PNL	PANEL
PTT	PUSH-TO-TEST
PTZ	PAN-TILT-ZOOM
PVC	SCHEDULE 40 POLYVINYL CONDUIT
RECPT	RECEPTACLE
RVAT	REDUCED VOLTAGE AUTO-TRANSFORMER STARTER
SA	SURGE ARRESTER
SDBC	SOFT DRAWN BARE COPPER
SE	SERVICE ENTRANCE
SN	SOLID NEUTRAL
SPD	SURGE PROTECTIVE DEVICE
SS	STAINLESS STEEL
STA	STATION
SW	SWITCH
TC	TIME CLOCK
TD	TIME DELAY
TDD	TIME DELAY ON DE-ENERGIZATION
TDE	TIME DELAY ON ENERGIZATION
TEL	TELEPHONE
THD	TOTAL HARMONIC DISTORTION
TMGB	TELECOMMUNICATIONS MAIN GROUND BAR
TGB	TELECOMMUNICATIONS GROUND BAR
TR	TAMPER RESISTANT
UG	UNDERGROUND
UGE	UNDERGROUND ELECTRIC
UGP	UNDERGROUND PRIMARY
UGS	UNDERGROUND SECONDARY
UH	UNIT HEATER
UON	UNLESS OTHERWISE NOTED
UTP	UNSHIELDED TWISTED PAIR
V	VOLT
VA	VOLT-AMP
VFD	VARIABLE FREQUENCY DRIVE
VM	VOLT-METER
W	WATT OR WIRE
WAP	WIRELESS ACCESS POINT
WH	WEATHER HEAD
WM	WATT METER
WP	WEATHERPROOF
XFMR	TRANSFORMER

2 SETS ((3*8 + 1*8N + 1*10EG) 2" GRS)

- CONDUIT TYPE (SEE ABBREVIATIONS) REFER TO SPECIFICATIONS IF NOT SHOWN
- CONDUIT SIZE
- GROUNDING (GROUND) CONDUCTOR, NUMBER AND SIZE
- GROUNDED (NEUTRAL) CONDUCTOR, NUMBER AND SIZE
- PHASE (HOT) CONDUCTOR, NUMBER AND SIZE
- NUMBER OF SETS

LIGHT REMOVAL PLAN KEYED NOTES:

1. REMOVE EXISTING ROADWAY LIGHT ASSEMBLY AND DEMOLISH FOUNDATION 2' BELOW GRADE. RECOVER AND GRADE AREA.
2. REMOVE EXISTING ELECTRICAL LIGHTING CONDUCTORS BACK TO SOURCE FROM WITHIN EXISTING CONDUIT. ABANDON CONDUIT IN PLACE.
3. EXISTING ROADWAY LIGHT FIXTURE TO REMAIN. TRACE LIGHTING CONDUCTORS FOR RECONNECTION TO NEW CIRCUIT.
4. DEMOLISH EXISTING PULLBOX.
5. EXISTING ELECTRICAL CONDUIT AND ELECTRICAL CIRCUIT TO REMAIN.
6. EXISTING UTILITY POWER POLE AND LOAD CENTER TO REMAIN. DISCONNECT EXISTING CONDUCTORS FROM THE EXISTING LOAD CENTER.
7. EXISTING ELECTRICAL PULLBOX TO REMAIN.

LIGHT INSTALLATION PLAN KEYED NOTES:

1. INSTALL PULLWIRE IN NEW CONDUIT FOR FUTURE CONDUCTOR INSTALLATION.
2. TRANSITION FROM UNDERGROUND PVC CONDUIT IN TRENCH TO PVC CONDUIT INSTALLED IN BRIDGE RAIL. SEE BRIDGE DETAILS FOR ADDITIONAL INFORMATION.
3. INSTALL NEW ELECTRICAL CIRCUIT IN NEW CONDUIT. REFER TO VOLTAGE DROP TABLES FOR CONDUCTOR SIZES.
4. CONNECT NEW CONDUIT TO THE EXISTING ELECTRICAL PULLBOX AND SPLICE NEW CONDUCTORS TO THE EXISTING LIGHTING CIRCUIT.
5. INSTALL NEW ELECTRICAL JUNCTION STRUCTURE WITH STUB-OUTS FOR FUTURE CONDUIT CONNECTIONS. STUB-OUTS SHALL BE A MINIMUM OF 1W-2'C, 3' FROM PULLBOX. FROM EACH UNUSED SIDE. CAPPED AND SEALED WATERTIGHT WITH PULLROPE FOR FUTURE EXPANSION.
6. INSTALL NEW ELECTRICAL PULLBOX.
7. CONNECT NEW CONDUIT TO THE EXISTING UTILITY POLE MOUNTED LOAD CENTER. COORDINATE POWER OUTAGE WITH UTILITY.
8. INSTALL NEW ROADWAY LIGHTING ASSEMBLY, LIGHT POLE, AND FOUNDATION.
9. CONDUIT RUN SHALL BE TWO (2) 2" PVC CONDUITS.
10. ELECTRICAL PULLBOX SHALL BE A TYPE 3 HD CONCRETE PULL BOX.

CONSTRUCTION NOTES:

1. SOME SYMBOLS OR ABBREVIATIONS MAY APPEAR ON THIS SHEET BUT NOT BE UTILIZED ON THE PROJECT.
2. LIGHTING LEGEND SHOWS EXAMPLE IDENTIFIERS. REFER TO LIGHT FIXTURE SCHEDULE FOR SPECIFIC REQUIREMENTS.
3. ALL PARTS OF THIS INSTALLATION SHALL BE IN ACCORDANCE WITH THE ARKANSAS STATE HIGHWAY AND TRANSPORTATION DEPARTMENT STANDARDS AND DETAILS, AND WITH THE MANUAL ON UNIFORM TRAFFIC CONTROL DEVICES, CURRENT EDITIONS.
4. CONDUIT INSTALLED UNDER ROADWAY SECTIONS SHALL BE INSTALLED BY PUSHING OR BORING METHODS. IF THE ENGINEER DETERMINES THIS IS NOT FEASIBLE, THEN A TRENCHING METHOD MAY BE USED.
5. CONTRACTOR MAY USE HDPE OR PVC FOR BORING. SECTIONAL PVC SHALL BE UL LISTED AND MARKED FOR USE IN DIRECTIONAL BORING.
6. ALL CONDUIT INSTALLED IN UNPAVED AREAS SHALL BE SCHEDULE 40 PVC CONDUIT.
7. ALL CONDUIT INSTALLED UNDER PAVED AREAS SHALL BE SCHEDULE 80 PVC CONDUIT.
8. ALL CONDUIT MOUNTED TO BRIDGE RAIL SHALL BE SCHEDULE 40 PVC 2" CONDUIT.
9. UTILIZE THE LARGEST EQUIPMENT GROUND SIZE WHEN MULTIPLE CIRCUITS ARE INSTALLED IN THE SAME CONDUIT.
10. ALL POLES SHALL BE GROUNDED PER NEC 410.
11. CONTRACTOR SHALL COORDINATE WITH EXISTING UTILITIES PRIOR TO CONSTRUCTION TO DETERMINE EXISTING UTILITY LOCATIONS AND EASEMENT LIMITS. THE NEW LIGHT POLE LOCATIONS SHALL BE COORDINATED WITH THE EXISTING UTILITIES TO VERIFY THEY WILL NOT IMPACT EXISTING UTILITIES OR EASEMENTS. ANY CONFLICTS SHALL BE REPORTED TO THE ENGINEER AND OWNER.
12. CONTRACTOR SHALL VERIFY EXISTING POWER UTILITY SERVICE POINTS AND CONNECTIONS PRIOR TO BEGINNING WORK.
13. ALL CONDUIT RUNS SHALL BE ONE (1) 2" CONDUIT, UNLESS OTHERWISE NOTED
14. ALL ELECTRICAL PULLBOXES SHALL BE TYPE 2 HD, UNLESS OTHERWISE NOTED.

FIXTURE SCHEDULE

TYPE	DESCRIPTION	DISTRIBUTION	LAMPS WATTS	LAMPS TYPE	VOLTAGE	REMARKS
A	AUTOBAHN SERIES ATB0 ATB0-P457-MVOLT-R3	TYPE 3 29,680 LUMENS	211W	LED	120V	1,2,3

FIXTURE SCHEDULE NOTES:

1. PROVIDE FIXTURES LISTED AND LABELED FOR WET LOCATION.
2. PROVIDE FIXTURE WITH A 40' LIGHT POLE.
3. PROVIDE FIXTURE WITH A 8' POLE ARM.

SUMMARY OF LIGHTING QUANTITIES

ITEM NO.	ITEM	QUANTITIES TOTAL	UNIT
SP & 202	REMOVAL AND DISPOSAL OF CONCRETE PULL BOX	17	EACH
SP & 202	REMOVAL AND DISPOSAL OF LUMINAIRE POLE AND FOUNDATION	10	EACH
710	NON-METALLIC CONDUIT (2")	5600	LIN. FT.
SS & 711	CONCRETE PULL BOX (TYPE 2 HD)	26	EACH
SS & 711	CONCRETE PULL BOX (TYPE 3 HD)	6	EACH
SP	ROADWAY ILLUMINATION POLE (1 x 211W LED LUMINAIRE, BREAKAWAY BASE, 8' ARM, 40')	10	EACH
SP	ELECTRICAL CONDUCTORS-IN-CONDUIT (1C/6 A.W.G., E.G.C.)	4800	LIN. FT.
SP	ELECTRICAL CONDUCTORS-IN-CONDUIT (1C/6 A.W.G.)	2400	LIN. FT.
SP	ELECTRICAL CONDUCTORS-IN-CONDUIT (1C/10 A.W.G., E.G.C.)	400	LIN. FT.
SP	ELECTRICAL CONDUCTORS-IN-CONDUIT (1C/10 A.W.G.)	800	LIN. FT.

BVWells 7/21/2023 1:40:17 PM
WORKSPACE: Personal
\\garverinc.local\GData\Projects\2021\21T01028 - ARDOT 061613 I-40 Strs and Apprs\Drawings\e061613x2_LPN.dgn
REVISED DATE:

DATE REVISED	DATE FILMED	DATE REVISED	DATE FILMED	FED. RD. DIST. NO.	STATE	FED. AID PROJ. NO.	SHEET NO.	TOTAL SHEETS
				6	ARK.			
				JOB NO.		061613	104	215

(2) HWY. 31 LIGHTING REMOVAL PLAN I

STATE OF ARKANSAS
LICENSED PROFESSIONAL ENGINEER
No. 21840
JAMES K. SCHMITT

Digitally Signed 06/30/2023

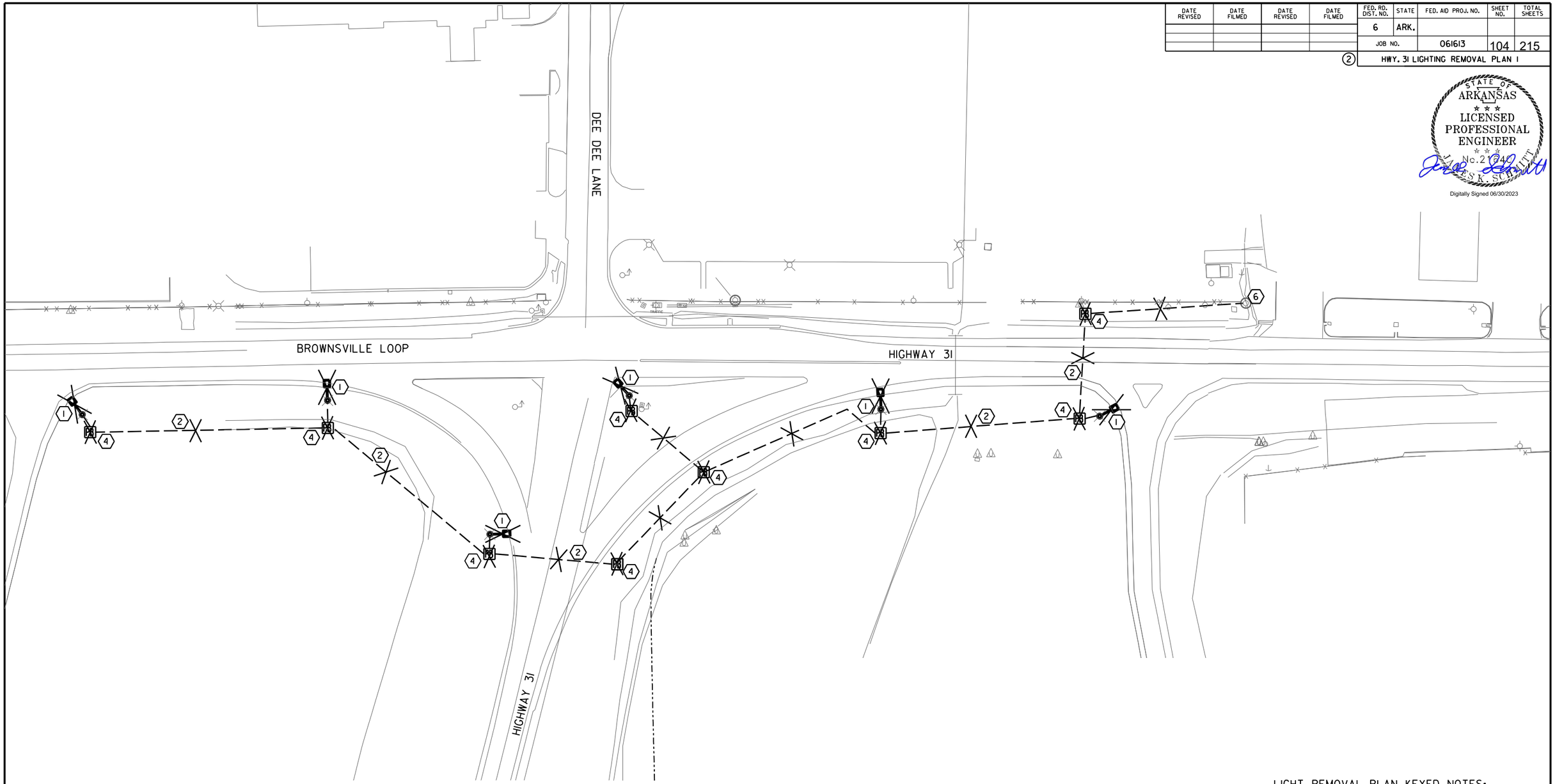

N

0 40 80

SCALE

LIGHT REMOVAL PLAN KEYED NOTES:

(1) REMOVE EXISTING ROADWAY LIGHT ASSEMBLY AND DEMOLISH FOUNDATION 2' BELOW GRADE. RECOVER AND GRADE AREA.

(2) REMOVE EXISTING ELECTRICAL LIGHTING CONDUCTORS BACK TO SOURCE FROM WITHIN EXISTING CONDUIT. ABANDON CONDUIT IN PLACE.

(4) DEMOLISH EXISTING PULLBOX.

(6) EXISTING UTILITY POWER POLE AND LOAD CENTER TO REMAIN. DISCONNECT EXISTING CONDUCTORS FROM THE EXISTING LOAD CENTER.

HWY.31 LIGHTING REMOVAL PLAN I

BVWells 6/29/2023 11:22:26 AM
WORKSPACE: Odot_2017
\\garverinc.local\Gdata\Projects\2021\21T0028 - ARDOT 061613 I-40 Strs and Apprs\Drawings\e061613xl_RLP1.dgn
REVISED DATE:

DATE REVISED	DATE FILMED	DATE REVISED	DATE FILMED	FED. RD. DIST. NO.	STATE	FED. AID PROJ. NO.	SHEET NO.	TOTAL SHEETS
				6	ARK.			
				JOB NO.		061613	105	215

(2) HWY. 31 LIGHTING REMOVAL PLAN 2

STATE OF ARKANSAS
LICENSED PROFESSIONAL ENGINEER
No. 21640
JAMES K. SCHMITT

Digitally Signed 06/30/2023

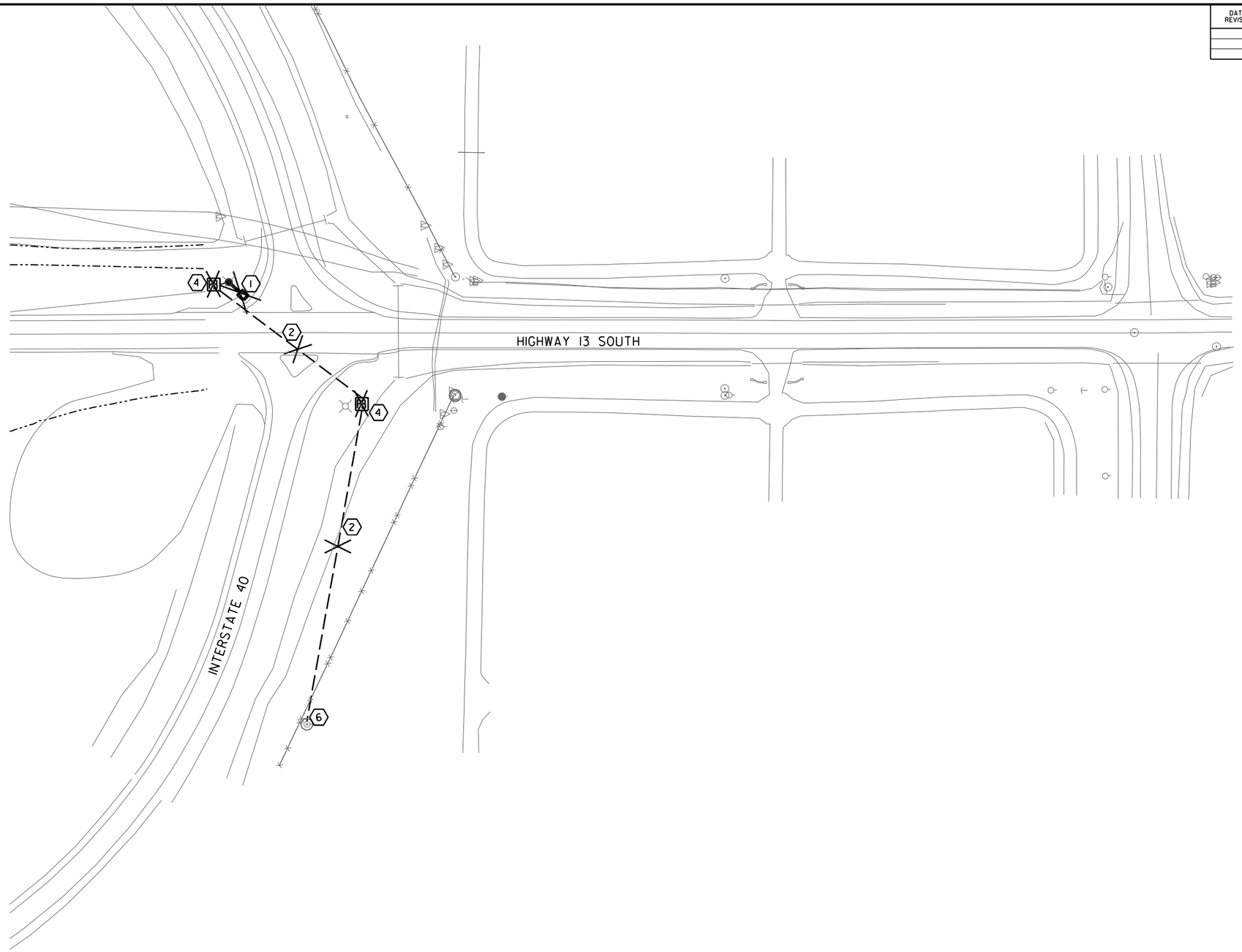

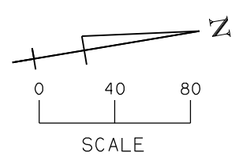

LIGHT REMOVAL PLAN KEYED NOTES:

(1) REMOVE EXISTING ROADWAY LIGHT ASSEMBLY AND DEMOLISH FOUNDATION 2' BELOW GRADE, RECOVER AND GRADE AREA.

(2) REMOVE EXISTING ELECTRICAL LIGHTING CONDUCTORS BACK TO SOURCE FROM WITHIN EXISTING CONDUIT. ABANDON CONDUIT IN PLACE.

(4) DEMOLISH EXISTING PULLBOX.

(6) EXISTING UTILITY POWER POLE AND LOAD CENTER TO REMAIN. DISCONNECT EXISTING CONDUCTORS FROM THE EXISTING LOAD CENTER.

HWY. 31 LIGHTING REMOVAL PLAN 2

BVWells 6/29/2023 11:22:27 AM
WORKSPACE: Odot_2017
\\garverinc.local\GData\Projects\2021\21T01028 - ARDOT 061613 I-40 Strs and Apprs\Drawings\e061613x2_RLP2.dgn
REVISED DATE:

DATE REVISED	DATE FILMED	DATE REVISED	DATE FILMED	FED. RD. DIST. NO.	STATE	FED. AID PROJ. NO.	SHEET NO.	TOTAL SHEETS
				6	ARK.			
				JOB NO.		061613	106	215

HWY. 13 LIGHTING REMOVAL PLAN 1

STATE OF ARKANSAS
LICENSED PROFESSIONAL ENGINEER
No. 21640
JAMES K. SCHMITT
Digitally Signed 06/30/2023

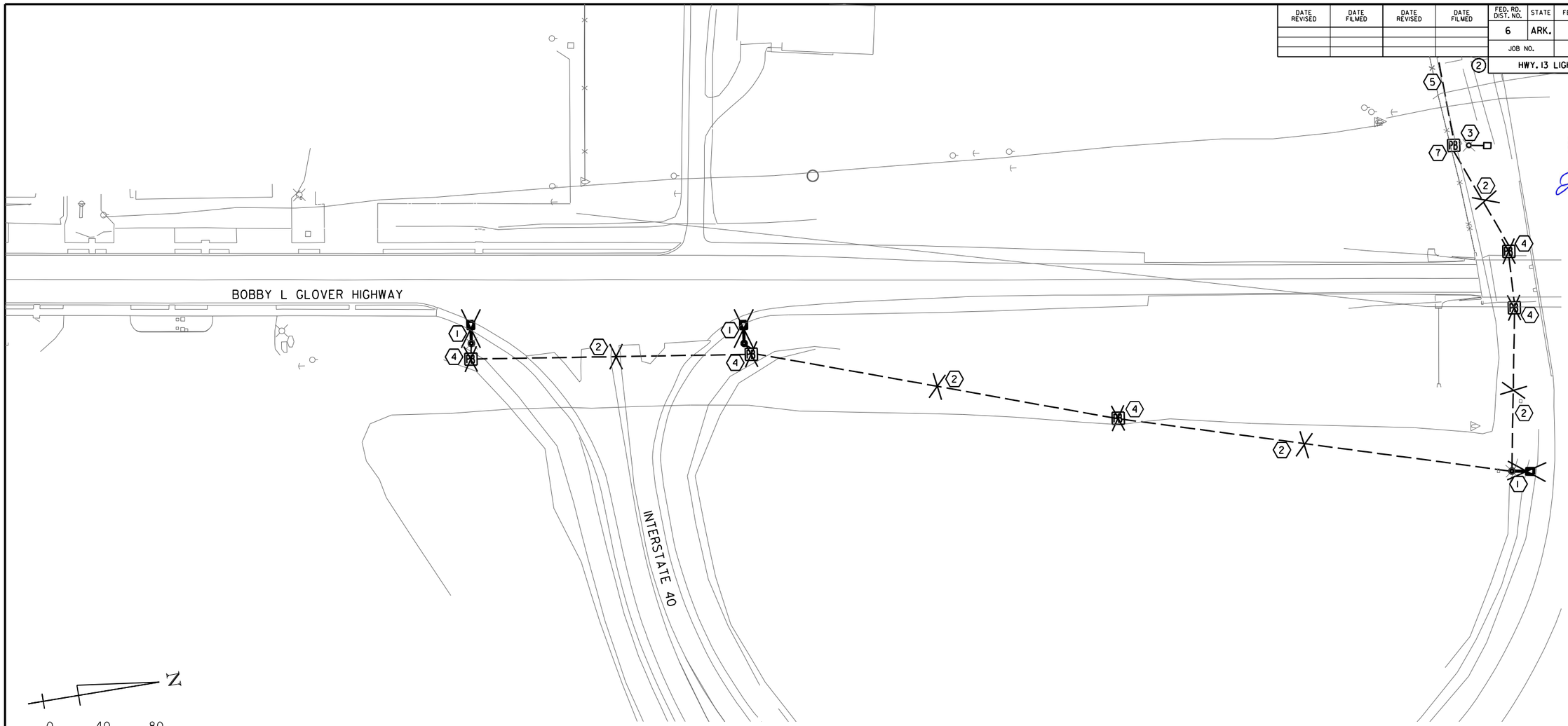

LIGHT REMOVAL PLAN KEYED NOTES:

1. REMOVE EXISTING ROADWAY LIGHT ASSEMBLY AND DEMOLISH FOUNDATION 2' BELOW GRADE, RECOVER AND GRADE AREA.
2. REMOVE EXISTING ELECTRICAL LIGHTING CONDUCTORS BACK TO SOURCE FROM WITHIN EXISTING CONDUIT. ABANDON CONDUIT IN PLACE.
3. EXISTING ROADWAY LIGHT FIXTURE TO REMAIN. TRACE LIGHTING CONDUCTORS FOR RECONNECTION TO NEW CIRCUIT.
4. DEMOLISH EXISTING PULLBOX.
5. EXISTING ELECTRICAL CONDUIT AND ELECTRICAL CIRCUIT TO REMAIN.
7. EXISTING ELECTRICAL PULLBOX TO REMAIN.

BVWells 6/29/2023 11:22:28 AM
WORKSPACE: Odot_2017
\\garverinc.local\GData\Projects\2021\21T01028 - ARDOT 061613 I-40 Strs and Apprs\Drawings\e061613x2_RLP1.dgn
REVISED DATE:

DATE REVISED	DATE FILMED	DATE REVISED	DATE FILMED	FED. RD. DIST. NO.	STATE	FED. AID PROJ. NO.	SHEET NO.	TOTAL SHEETS
				6	ARK.			
				JOB NO.		061613	107	215

(2) HWY. 31 LIGHTING INSTALLATION PLAN 1

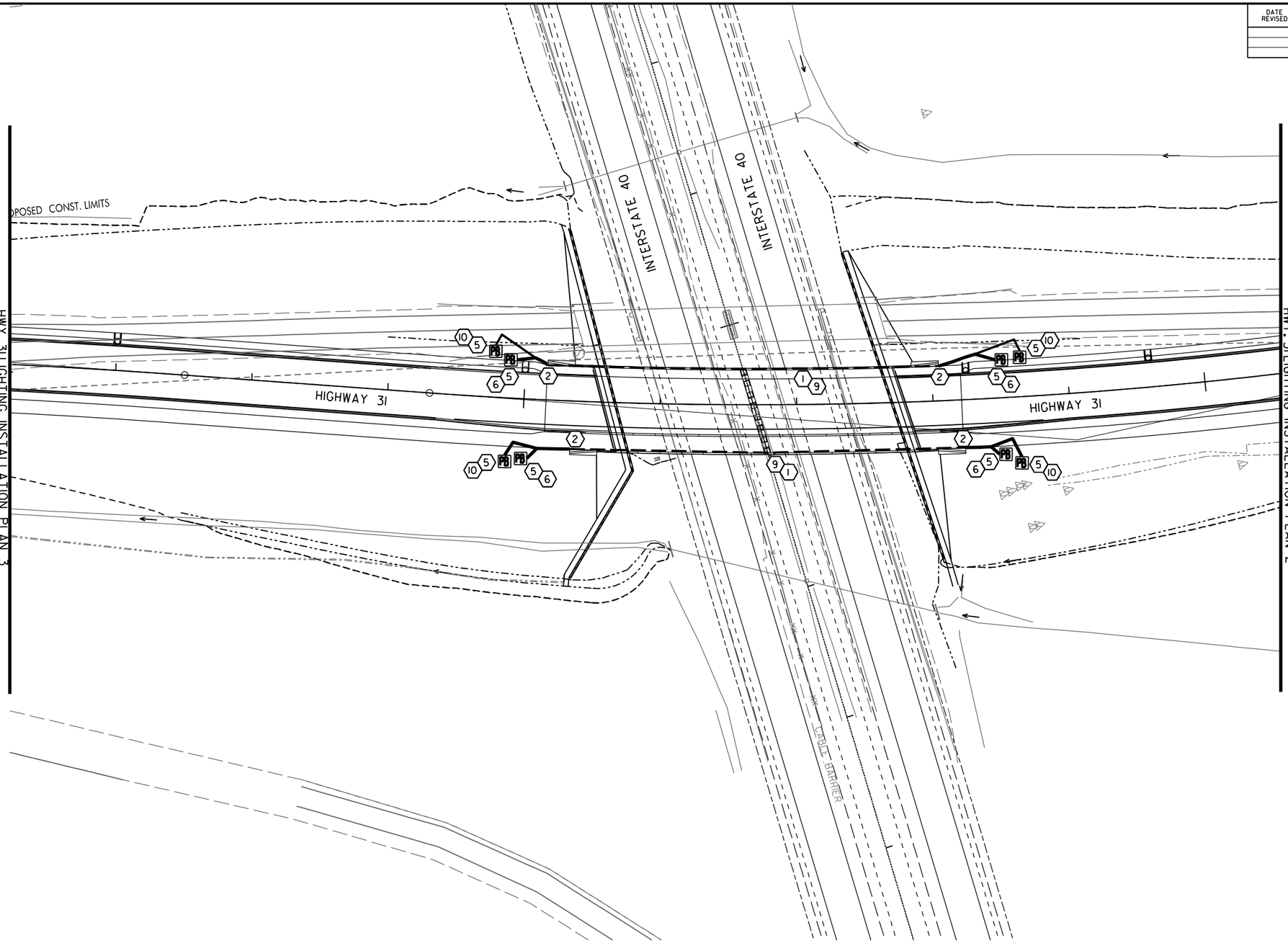

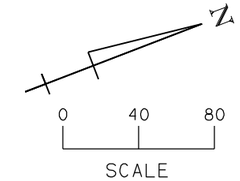

STATE OF ARKANSAS
LICENSED PROFESSIONAL ENGINEER
No. 21840
JAMES K. SCHMITT
Digitally Signed 06/30/2023

LIGHT INSTALLATION PLAN KEYED NOTES:

(1) INSTALL PULLWIRE IN NEW CONDUIT FOR FUTURE CONDUCTOR INSTALLATION.

(2) TRANSITION FROM UNDERGROUND PVC CONDUIT IN TRENCH TO PVC CONDUIT INSTALLED IN BRIDGE RAIL. SEE BRIDGE DETAILS FOR ADDITIONAL INFORMATION.

(5) INSTALL NEW ELECTRICAL JUNCTION STRUCTURE WITH STUB-OUTS FOR FUTURE CONDUIT CONNECTIONS. STUB-OUTS SHALL BE A MINIMUM OF 1W-2"C, 3' FROM PULLBOX, FROM EACH UNUSED SIDE, CAPPED AND SEALED WATERTIGHT WITH PULLROPE FOR FUTURE EXPANSION.

(6) INSTALL NEW ELECTRICAL PULLBOX.

(9) CONDUIT RUN SHALL BE TWO (2) 2" PVC CONDUITS.

(10) ELECTRICAL PULLBOX SHALL BE A TYPE 3 HD CONCRETE PULL BOX.

GENERAL NOTES

1. COORDINATE ALL ELECTRICAL WORK WITH THE ROADWAY LAYOUT. CONTRACTOR SHALL COORDINATE LOCATION AND ROUTING OF CONDUIT WITH ROADWAY PLANS.
2. EXPOSED CONDUIT SHALL BE GALVANIZED RIGID STEEL. CONDUIT UNDERGROUND IN SOIL SHALL BE SCHEDULE 40 PVC. CONDUIT UNDER ROADWAY SURFACE SHALL BE SCHEDULE 80 PVC. CONDUIT IN RAIL SHALL BE SCHEDULE 40 PVC.
3. LABEL CABLES IN ALL PULL BOXES. (TYPICAL)
4. REFER TO VOLTAGE DROP TABLES FOR CONDUIT AND CONDUCTOR INFORMATION BETWEEN LIGHT POLES.
5. ALL FIXTURES SHALL BE WET LOCATION RATED.
6. NOT ALL PULLBOXES SHOWN FOR CLARITY, REFER TO QUANTITIES AND DETAILS FOR MORE INFORMATION.
7. ALL CONDUIT RUNS SHALL BE 1-WAY 2"C ELECTRICAL CONDUIT, UNLESS NOTED OTHERWISE.
8. ELECTRICAL CONDUIT AND PULLBOXES SHALL BE ADJUSTED AS NECESSARY TO PREVENT CONFLICT WITH TRAFFIC SIGNAL EQUIPMENT AND CONDUIT.

HWY. 31 LIGHTING INSTALLATION PLAN 1

BVWells 6/29/2023 11:22:39 AM
WORKSPACE: Odot_2017
\\garverinc.local\Gdata\Projects\2021\210028 - ARDOT 061613 I-40 Strs and Apprs\Drawings\e061613xl.blPldgn
REVISED DATE:

DATE REVISED	DATE FILMED	DATE REVISED	DATE FILMED	FED. RD. DIST. NO.	STATE	FED. AID PROJ. NO.	SHEET NO.	TOTAL SHEETS
				6	ARK.			
				JOB NO.		061613	108	215

(2) HWY. 31 LIGHTING INSTALLATION PLAN 2

STATE OF ARKANSAS
LICENSED PROFESSIONAL ENGINEER
No.21944
JAMES K. SCHMITT

Digitally Signed 06/30/2023

POLE SCHEDULE - SP3

POLE NO.	LIGHT FIXTURE	PULL BOX AT BASE	FOUNDATION TYPE	HEIGHT	ORIENTATION ANGLE (PLAN NORTH=0°, ROTATION CCW)
L1	1X A	YES	A	40'	324.38°
L2	1X A	YES	A	40'	342.47°
L3	1X A	YES	A	40'	303.50°
L4	1X A	YES	A	40'	314.66°
L5	1X A	YES	A	40'	342.47°
L6	1X A	YES	A	40'	299.27°

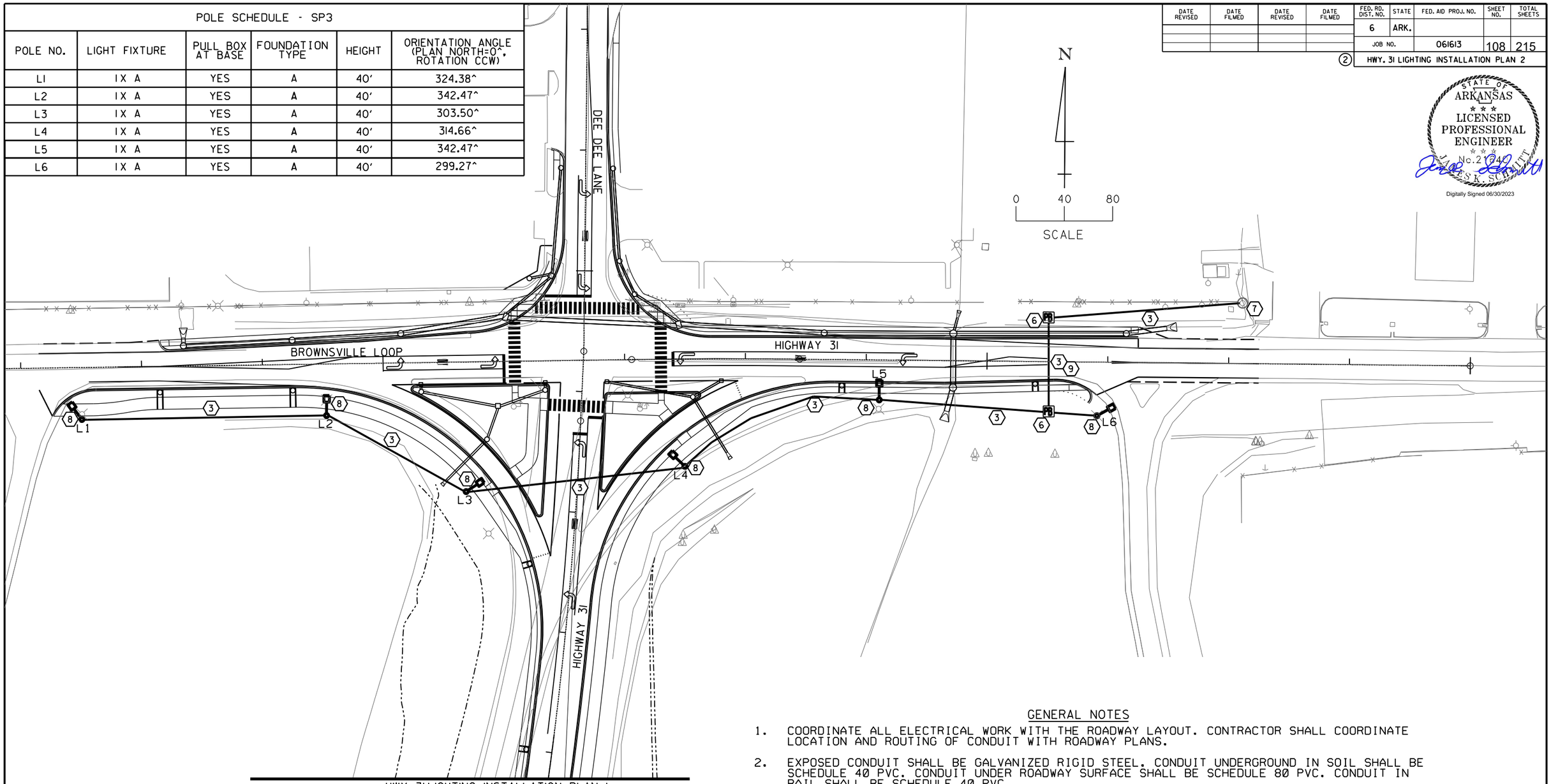

HWY. 31 LIGHTING INSTALLATION PLAN 1

LIGHT INSTALLATION PLAN KEYED NOTES:

(3) INSTALL NEW ELECTRICAL CIRCUIT IN NEW CONDUIT. REFER TO VOLTAGE DROP TABLES FOR CONDUCTOR SIZES.

(6) INSTALL NEW ELECTRICAL PULLBOX.

(7) CONNECT NEW CONDUIT TO THE EXISTING UTILITY POLE MOUNTED LOAD CENTER. COORDINATE POWER OUTAGE WITH UTILITY.

(8) INSTALL NEW ROADWAY LIGHTING ASSEMBLY, LIGHT POLE, AND FOUNDATION.

(9) CONDUIT RUN SHALL BE TWO (2) 2" PVC CONDUITS.

GENERAL NOTES

1. COORDINATE ALL ELECTRICAL WORK WITH THE ROADWAY LAYOUT. CONTRACTOR SHALL COORDINATE LOCATION AND ROUTING OF CONDUIT WITH ROADWAY PLANS.
2. EXPOSED CONDUIT SHALL BE GALVANIZED RIGID STEEL. CONDUIT UNDERGROUND IN SOIL SHALL BE SCHEDULE 40 PVC. CONDUIT UNDER ROADWAY SURFACE SHALL BE SCHEDULE 80 PVC. CONDUIT IN RAIL SHALL BE SCHEDULE 40 PVC.
3. LABEL CABLES IN ALL PULL BOXES. (TYPICAL)
4. REFER TO VOLTAGE DROP TABLES FOR CONDUIT AND CONDUCTOR INFORMATION BETWEEN LIGHT POLES.
5. ALL FIXTURES SHALL BE WET LOCATION RATED.
6. NOT ALL PULLBOXES SHOWN FOR CLARITY, REFER TO QUANTITIES AND DETAILS FOR MORE INFORMATION.
7. ALL CONDUIT RUNS SHALL BE 1-WAY 2"C ELECTRICAL CONDUIT, UNLESS NOTED OTHERWISE.
8. ELECTRICAL CONDUIT AND PULLBOXES SHALL BE ADJUSTED AS NECESSARY TO PREVENT CONFLICT WITH TRAFFIC SIGNAL EQUIPMENT AND CONDUIT.

HWY.31 LIGHTING INSTALLATION PLAN 2

BVWells 6/29/2023 11:22:42 AM
WORKSPACE: Odot_2017
\\garverinc.local\GData\Projects\2021\21701028 - ARDOT 061613 I-40 Strs and Apprs\Drawings\e061613xl_LP1.dgn
REVISED DATE:

DATE REVISED	DATE FILMED	DATE REVISED	DATE FILMED	FED. RD. DIST. NO.	STATE	FED. AID PROJ. NO.	SHEET NO.	TOTAL SHEETS
				6	ARK.			
				JOB NO.		061613	109	215

(2) HWY. 31 LIGHTING INSTALLATION PLAN 3

STATE OF ARKANSAS
LICENSED PROFESSIONAL ENGINEER
No. 21840
JAMES K. SCHMITT

Digitally Signed 06/30/2023

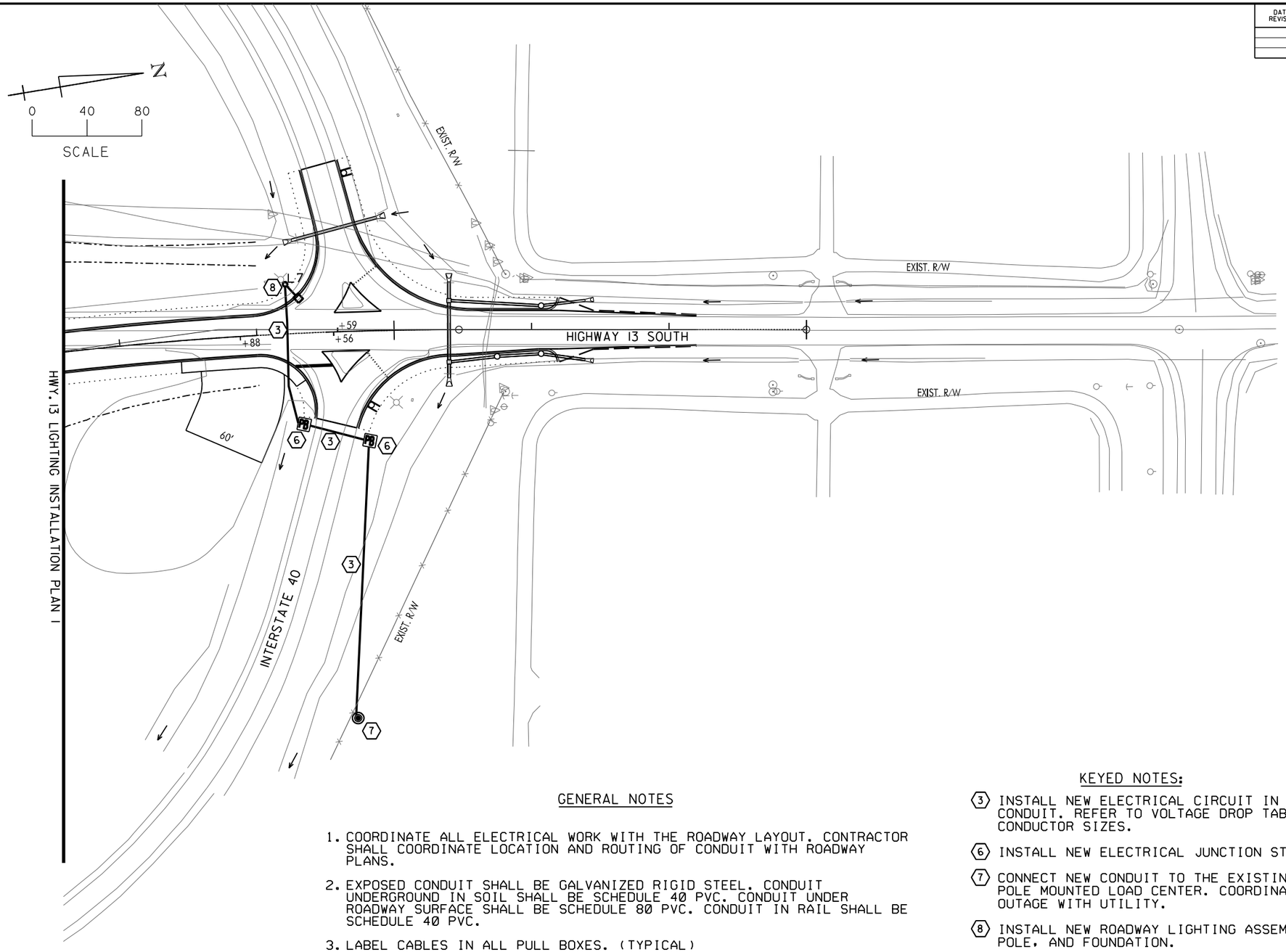

GENERAL NOTES

1. COORDINATE ALL ELECTRICAL WORK WITH THE ROADWAY LAYOUT. CONTRACTOR SHALL COORDINATE LOCATION AND ROUTING OF CONDUIT WITH ROADWAY PLANS.
2. EXPOSED CONDUIT SHALL BE GALVANIZED RIGID STEEL. CONDUIT UNDERGROUND IN SOIL SHALL BE SCHEDULE 40 PVC. CONDUIT UNDER ROADWAY SURFACE SHALL BE SCHEDULE 80 PVC. CONDUIT IN RAIL SHALL BE SCHEDULE 40 PVC.
3. LABEL CABLES IN ALL PULL BOXES. (TYPICAL)
4. REFER TO VOLTAGE DROP TABLES FOR CONDUIT AND CONDUCTOR INFORMATION BETWEEN LIGHT POLES.
5. ALL FIXTURES SHALL BE WET LOCATION RATED.
6. NOT ALL PULLBOXES SHOWN FOR CLARITY, REFER TO QUANTITIES AND DETAILS FOR MORE INFORMATION.
7. ALL CONDUIT RUNS SHALL BE 1-WAY 2"C ELECTRICAL CONDUIT, UNLESS NOTED OTHERWISE.
8. ELECTRICAL CONDUIT AND PULLBOXES SHALL BE ADJUSTED AS NECESSARY TO PREVENT CONFLICT WITH TRAFFIC SIGNAL EQUIPMENT AND CONDUIT.

KEYED NOTES:

(3) INSTALL NEW ELECTRICAL CIRCUIT IN NEW CONDUIT. REFER TO VOLTAGE DROP TABLES FOR CONDUCTOR SIZES.

(6) INSTALL NEW ELECTRICAL JUNCTION STRUCTURE.

(7) CONNECT NEW CONDUIT TO THE EXISTING UTILITY POLE MOUNTED LOAD CENTER. COORDINATE POWER OUTAGE WITH UTILITY.

(8) INSTALL NEW ROADWAY LIGHTING ASSEMBLY, LIGHT POLE, AND FOUNDATION.

POLE SCHEDULE - SP3

POLE NO.	LIGHT FIXTURE	PULL BOX AT BASE	FOUNDATION TYPE	HEIGHT	ORIENTATION ANGLE (PLAN NORTH=0°, ROTATION CCW)
L7	1X A	YES	A	40'	224.11°

BVWells 6/29/2023 11:22:44 AM
WORKSPACE: Odot_2017
\\garverinc.local\GData\Projects\2021\21T0028 - ARDOT 061613 I-40 Strs and Apprs\Drawings\061613x2_LP2.dgn
REVISED DATE:

DATE REVISED	DATE FILMED	DATE REVISED	DATE FILMED	FED. RD. DIST. NO.	STATE	FED. AID PROJ. NO.	SHEET NO.	TOTAL SHEETS
				6	ARK.			
				JOB NO.		061613	110	215

(2) HWY. 13 LIGHTING INSTALLAITON PLAN 1

STATE OF ARKANSAS
LICENSED PROFESSIONAL ENGINEER
No. 21640
JAMES K. SCHMITT
Digitally Signed 06/30/2023

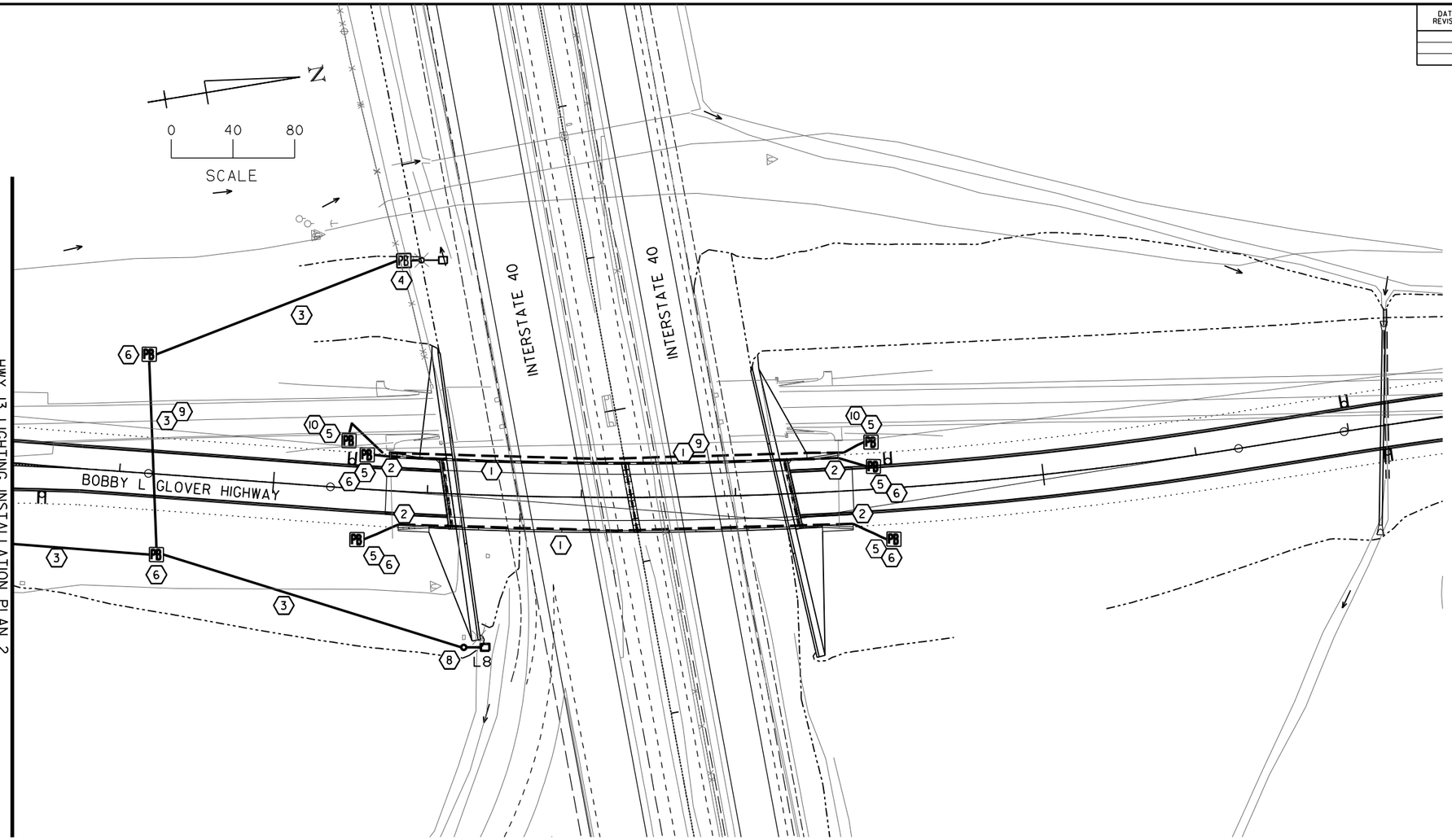

HWY. 13 LIGHTING INSTALLATION PLAN 2

GENERAL NOTES

1. COORDINATE ALL ELECTRICAL WORK WITH THE ROADWAY LAYOUT. CONTRACTOR SHALL COORDINATE LOCATION AND ROUTING OF CONDUIT WITH ROADWAY PLANS.
2. EXPOSED CONDUIT SHALL BE GALVANIZED RIGID STEEL. CONDUIT UNDERGROUND IN SOIL SHALL BE SCHEDULE 40 PVC. CONDUIT UNDER ROADWAY SURFACE SHALL BE SCHEDULE 80 PVC. CONDUIT IN RAIL SHALL BE SCHEDULE 40 PVC.
3. LABEL CABLES IN ALL PULL BOXES. (TYPICAL)
4. REFER TO VOLTAGE DROP TABLES FOR CONDUIT AND CONDUCTOR INFORMATION BETWEEN LIGHT POLES.
5. ALL FIXTURES SHALL BE WET LOCATION RATED.
6. NOT ALL PULLBOXES SHOWN FOR CLARITY. REFER TO QUANTITIES AND DETAILS FOR MORE INFORMATION.
7. ALL CONDUIT RUNS SHALL BE 1-WAY 2"C ELECTRICAL CONDUIT. UNLESS NOTED OTHERWISE.
8. ELECTRICAL CONDUIT AND PULLBOXES SHALL BE ADJUSTED AS NECESSARY TO PREVENT CONFLICT WITH TRAFFIC SIGNAL EQUIPMENT AND CONDUIT.

LIGHT INSTALLATION PLAN KEYED NOTES:

(1) INSTALL PULLWIRE IN NEW CONDUIT FOR FUTURE CONDUCTOR INSTALLATION.

(2) TRANSITION FROM UNDERGROUND PVC CONDUIT IN TRENCH TO PVC CONDUIT INSTALLED IN BRIDGE RAIL. SEE BRIDGE DETAILS FOR ADDITIONAL INFORMATION.

(3) INSTALL NEW ELECTRICAL CIRCUIT IN NEW CONDUIT. REFER TO VOLTAGE DROP TABLES FOR CONDUCTOR SIZES.

(4) CONNECT NEW CONDUIT TO THE EXISTING ELECTRICAL PULLBOX AND SPLICE NEW CONDUCTORS TO THE EXISTING LIGHTING CIRCUIT.

(5) INSTALL NEW ELECTRICAL JUNCTION STRUCTURE WITH STUB-OUTS FOR FUTURE CONDUIT CONNECTIONS. STUB-OUTS SHALL BE A MINIMUM OF 1W-2"C, 3' FROM PULLBOX, FROM EACH UNUSED SIDE, CAPPED AND SEALED WATERTIGHT WITH PULLROPE FOR FUTURE EXPANSION.

(6) INSTALL NEW ELECTRICAL PULLBOX.

(8) INSTALL NEW ROADWAY LIGHTING ASSEMBLY, LIGHT POLE, AND FOUNDATION.

(9) CONDUIT RUN SHALL BE TWO (2) 2" PVC CONDUITS.

(10) ELECTRICAL PULLBOX SHALL BE A TYPE 3 HD CONCRETE PULL BOX.

POLE SCHEDULE - SP3

POLE NO.	LIGHT FIXTURE	PULL BOX AT BASE	FOUNDATION TYPE	HEIGHT	ORIENTATION ANGLE (PLAN NORTH=0^, ROTATION CCW)
L8	1X A	YES	A	40'	271.49^

BVWells 6/29/2023 11:22:45 AM
WORKSPACE: Odot_2017
\\garverinc.local\GData\Projects\2021\21T01028 - ARDOT 061613 I-40 Strs and Apprs\Drawings\e061613x2_bLP1.dgn
REVISED DATE:

HWY. 13 LIGHTING INSTALLATION PLAN 1

DATE REVISED	DATE FILMED	DATE REVISED	DATE FILMED	FED. RD. DIST. NO.	STATE	FED. AID PROJ. NO.	SHEET NO.	TOTAL SHEETS
				6	ARK.			
				JOB NO.		061613	111	215

(2) HWY. 13 LIGHTING INSTALLATION PLAN 2

STATE OF ARKANSAS
LICENSED PROFESSIONAL ENGINEER
No. 21844
JAMES K. SCHMITT

Digitally Signed 06/30/2023

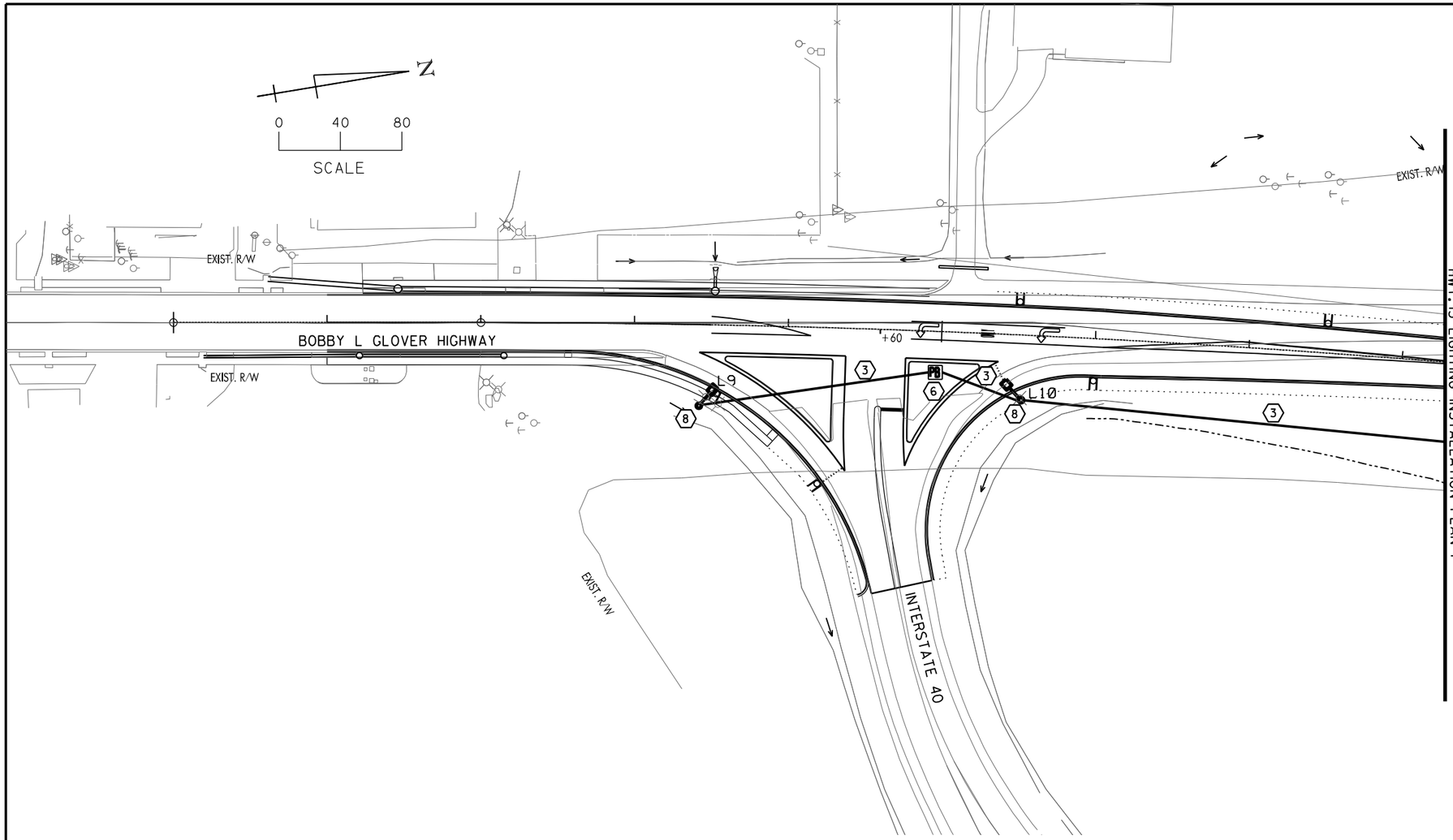

HWY. 13 LIGHTING INSTALLATION PLAN 1

LIGHT INSTALLATION PLAN KEYED NOTES:

(3) INSTALL NEW ELECTRICAL CIRCUIT IN NEW CONDUIT. REFER TO VOLTAGE DROP TABLES FOR CONDUCTOR SIZES.

(6) INSTALL NEW ELECTRICAL PULLBOX.

(8) INSTALL NEW ROADWAY LIGHTING ASSEMBLY, LIGHT POLE, AND FOUNDATION.

GENERAL NOTES

1. COORDINATE ALL ELECTRICAL WORK WITH THE ROADWAY LAYOUT. CONTRACTOR SHALL COORDINATE LOCATION AND ROUTING OF CONDUIT WITH ROADWAY PLANS.
2. EXPOSED CONDUIT SHALL BE GALVANIZED RIGID STEEL. CONDUIT UNDERGROUND IN SOIL SHALL BE SCHEDULE 40 PVC. CONDUIT UNDER ROADWAY SURFACE SHALL BE SCHEDULE 80 PVC. CONDUIT IN RAIL SHALL BE SCHEDULE 40 PVC.
3. LABEL CABLES IN ALL PULL BOXES. (TYPICAL)
4. REFER TO VOLTAGE DROP TABLES FOR CONDUIT AND CONDUCTOR INFORMATION BETWEEN LIGHT POLES.
5. ALL FIXTURES SHALL BE WET LOCATION RATED.
6. NOT ALL PULLBOXES SHOWN FOR CLARITY, REFER TO QUANTITIES AND DETAILS FOR MORE INFORMATION.
7. ALL CONDUIT RUNS SHALL BE 1-WAY 2"C ELECTRICAL CONDUIT, UNLESS NOTED OTHERWISE.
8. ELECTRICAL CONDUIT AND PULLBOXES SHALL BE ADJUSTED AS NECESSARY TO PREVENT CONFLICT WITH TRAFFIC SIGNAL EQUIPMENT AND CONDUIT.

POLE SCHEDULE - SP3

POLE NO.	LIGHT FIXTURE	PULL BOX AT BASE	FOUNDATION TYPE	HEIGHT	ORIENTATION ANGLE (PLAN NORTH=0^, ROTATION CCW)
L9	1X A	YES	A	40'	320.50^
L10	1X A	YES	A	40'	43.09^

HWY. 13 LIGHTING INSTALLATION PLAN 2

BVWells 6/29/2023 11:22:47 AM
WORKSPACE: Odot_2017
\\garverinc.local\GData\Projects\2021\21T0028 - ARDOT 061613 I-40 Strs and Apprs\Drawings\e061613x2_LP1.dgn
REVISED DATE:

DATE REVISED	DATE FILMED	DATE REVISED	DATE FILMED	FED. RD. DIST. NO.	STATE	FED. AID PROJ. NO.	SHEET NO.	TOTAL SHEETS
				6	ARK.			
				JOB NO.		061613	112	215

(2) ELECTRICAL DETAILS I

STATE OF ARKANSAS LICENSED PROFESSIONAL ENGINEER No. 21944 JESSE K. SCHMITT

Digitally Signed 06/30/2023

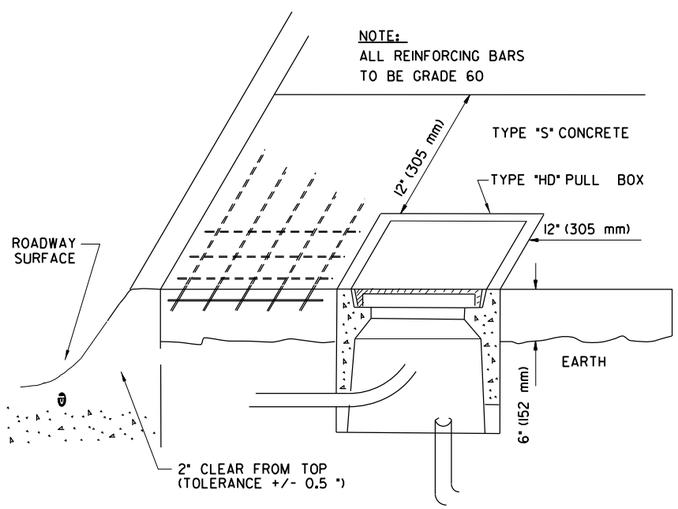

ISOMETRIC

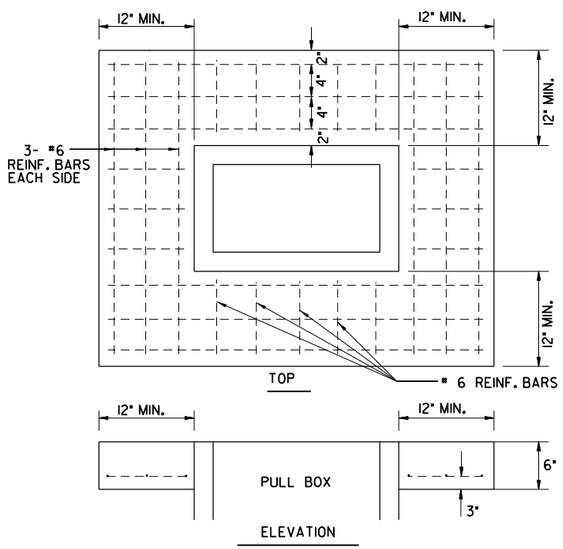

NOTES:

1. ALL TYPE HD PULL BOXES ARE INSTALLED WITH AN APRON OF CONCRETE 12" (305 MM) WIDE AND 6" (152 MM) IN DEPTH. ALL PAYMENT SHALL BE INCLUDED IN THE PRICE OF THE TYPE HD PULL BOX. PULL BOX SHALL BE INSTALLED FLUSH TO SURROUNDING GRADE UNLESS OTHERWISE INSTRUCTED BY THE ENGINEER. THE CONCRETE SHALL BE CLASS "S." THREE #6 REINFORCING BARS IN THE APRON ON ALL SIDES OF THE PULL BOX ARE REQUIRED IN CONCRETE.
2. UL LISTED PULL BOX AND EXTRA HEAVY-DUTY COVER SHALL BE DESIGNED FOR A TEST LOAD OF 33,750 LBS AND A DESIGN LOAD OF 22,500 LBS.
3. PULL BOX INTERIOR DIMENSIONS SHALL BE 24"L × 18"W × 18"D (OPEN BOTTOM), UNLESS OTHERWISE NOTED.
4. PROVIDE MINIMUM 3' SLACK CABLE LOOP FOR EACH CABLE.
5. COLOR CODE, TAG AND IDENTIFY ALL CABLES IN UL LISTED PULL BOX.
6. EXACT LOCATION OF EACH UL LISTED PULL BOX SHALL BE APPROVED BY THE OWNER AND ENGINEER.

(A) CONCRETE PULL BOX (TYPE SPECIAL HD) DETAIL

SCALE: N.T.S.

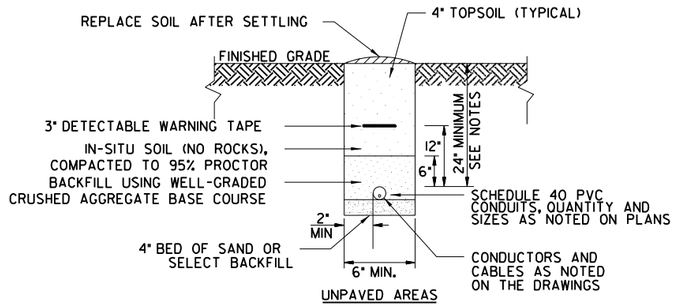

UNPAVED AREAS

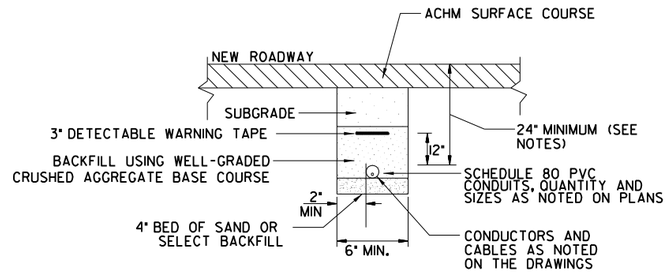

PAVED AREAS

ELECTRICAL DUCT NOTES:

1. CONTRACTOR SHALL STAKE THE DUCT INSTALLATION IN PLAN AND ELEVATION FOR NEW ELECTRICAL DUCTS TO AVOID EXISTING UTILITIES. STAKING PLAN SHALL BE APPROVED BY OWNER AND ENGINEER PRIOR TO WORK.
2. CONTRACTOR SHALL ADJUST THE DEPTH OF THE ELECTRICAL DUCTS AS REQUIRED TO MAINTAIN THE MINIMUM COVER REQUIREMENT INDICATED AND AVOID EXISTING AND NEW UTILITIES.
3. SIMILAR CONSTRUCTION FOR OTHER DUCT SIZES.
4. INSTALL DUCT CONDUIT SUPPORTS AT 5'-0" O.C. MAXIMUM SPACING. UTILIZE LOCKING COLLARS OR HOLD DOWN BARS WITH ANCHORS TO PREVENT DUCT FLOTATION. (TYPICAL ALL DUCTS).
5. NO PVC SHALL EMERGE FROM THE GROUND OR CONCRETE SLAB OR ENCASEMENT.
6. INSTALL CONDUCTORS AND CABLES AS NOTED ON DRAWING. INSTALL PULLWIRE IN ALL SPARE DUCTS/CONDUITS.
7. MINIMUM COVER REQUIREMENT FOR DUCT BANKS UNDER ROADS, DRIVEWAYS AND PARKING LOTS SHALL BE 24".
8. VERTICAL AND HORIZONTAL DISTANCES BETWEEN CONDUITS SHALL BE 3" MINIMUM FOR DUCTS CONTAINING CIRCUITS OVER 600 VOLTS.
9. END BELLS OR COUPLINGS WITH REMOVABLE FACTORY PLUGS SHALL BE INSTALLED FLUSH WITH THE CONCRETE ENCASEMENT AT ACCESS POINTS.
10. ROCK REMOVAL SHALL BE CONSIDERED SUBSIDIARY TO DUCT INSTALLATION.

(B) NON-ENCASED ELECTRICAL DUCT BANK DETAILS

SCALE: N.T.S.

3" MIN WIDTH — CAUTION BURIED ELECTRIC LINE BELOW

WARNING TAPE GENERAL NOTES:

1. POWER MARKING TAPES SHALL BE DETECTABLE TYPE CONSTRUCTION WITH RED BACKGROUND AND BLACK LETTERING.
2. TAPE SHALL BE DETECTABLE, DURABLE, HIGHLY VISIBLE, RESISTANT TO ELEMENTS, MEETING AND/OR EXCEEDING ALL INDUSTRY STANDARDS.

(C) UNDERGROUND DETECTABLE WARNING TAPE

SCALE: N.T.S.

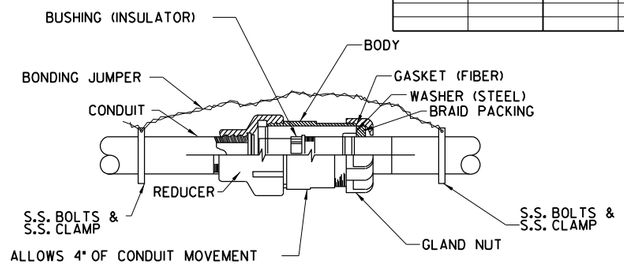

NOTE: EXPANSION FITTINGS SHALL BE INSTALLED ON BRIDGE CONDUIT THE EXPANSION FITTINGS SHALL BE AN ABSORBED ITEM.

(D) EXPANSION FITTING DETAIL

N.T.S.

GENERAL NOTES:

1. INSTALL NEW ROUND, TAPERED, STEEL POLE. ACCESSIBLE GROUNDING PROVISION, BASE COVER, VIBRATION DAMPER, AND ALL REQUIRED MOUNTING ACCESSORIES. POLE SHALL BE DESIGNED FOR THE TOTAL EFFECTIVE PROJECTED AREA OF ALL LIGHT FIXTURES AT A 90 MPH BASIC WIND SPEED WITH 3 SECOND GUST. ALL POLES SHALL BE DESIGNED TO MEET THE AASHTO STANDARD SPECIFICATIONS FOR STRUCTURAL SUPPORTS FOR HIGHWAY SIGNS, LUMINAIRES AND TRAFFIC SIGNALS, CURRENT EDITION.
2. LIGHT FIXTURE, ARM, AND POLE COLORS SHALL BE DARK BRONZE OR APPROVED EQUAL. STEEL POLE SHALL INCLUDE PRE-TREATMENT PROCESSES AND POWDER COAT FINISH TO PREVENT CORROSION. ALL FIXTURES TO BE WET LOCATION RATED.
3. FINAL ACCEPTANCE TESTING PROCEDURE SHALL CONSIST OF THE FOLLOWING:

   A. SUBMIT TEST PROCEDURE FOR REVIEW AND APPROVAL.

   B. CONDUCT MINIMUM 14-DAY FINAL ACCEPTANCE TEST FOR THE COMPLETE LIGHTING SYSTEM. CORRECT MALFUNCTIONING EQUIPMENT AND RETEST, OTHERWISE REMOVE AND REPLACE WITH NEW EQUIPMENT.

   C. REPLACE BURNED OUT AND NOTICEABLY DIM LAMPS AND RETEST.

   D. DURING FINAL ACCEPTANCE TEST PERIOD, TAKE FIELD LIGHT LEVEL MEASUREMENTS (ILLUMINANCE) ALONG THE ENTIRE STRUCTURE, IN A 10' GRID PATTERN COVERING ALL PAVED AREAS, WITH AN ILLUMINANCE METER THAT IS LED RATED. FIELD LEVEL MEASUREMENTS AND CALCULATIONS SHALL MEET OR EXCEED INITIAL LUMEN DESIGN CALCULATIONS. COORDINATE FIELD WORK WITH OWNER AND ENGINEER.
4. ACCEPTANCE CRITERIA SHALL CONSIST OF THE FOLLOWING:

   A. SUBMIT COMPLETE SHOP DRAWING DATA FOR FIXTURE AND LAMP, INCLUDING IES FILE AND LLF CALCULATION.

   B. SUBMIT COMPLETE POINT-BY-POINT PHOTOMETRIC LIGHTING ANALYSIS OF ALL GIVEN AREAS FOR BOTH INITIAL LUMEN AND LLF CALCULATIONS.

   C. LLF DESIGN, LIGHTING ANALYSIS VALUES SHALL MEET OR EXCEED THE ILLUMINATION DESIGN CRITERIA TABLE REQUIREMENTS, NO EXCEPTION.
5. LUMINAIRE ASSEMBLY SHALL BE OF THE FULL CUTOFF TYPE OR HAVE AN UPLIGHT RATING OF U0.

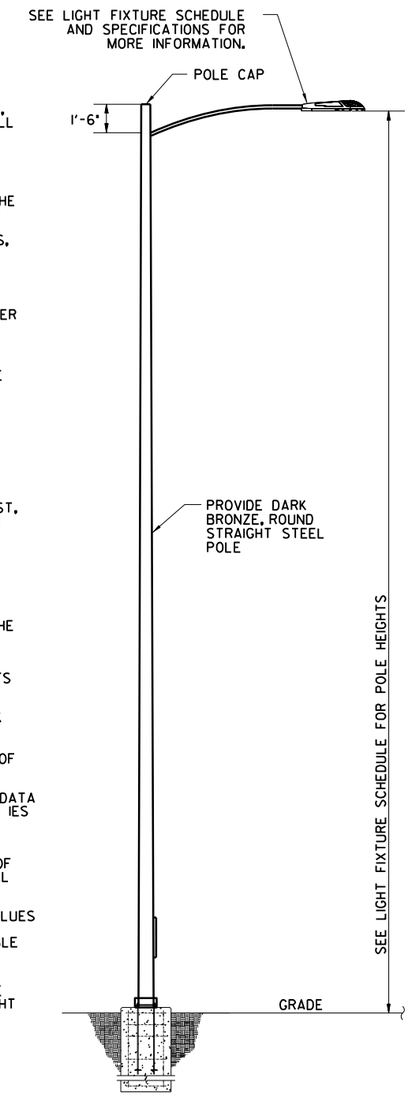

(E) SINGLE LIGHT FIXTURE ON POLE ELEVATION

SCALE: N.T.S.

BVWells 6/29/2023 11:22:48 AM
WORKSPACE: Odot_2017
\\garverinc.local\GData\Projects\2021\21T0028 - ARDOT 061613 I-40 Strs and Apprs\Drawings\e061613x2.EDI.dgn
REVISED DATE:

DATE REVISED	DATE FILMED	DATE REVISED	DATE FILMED	FED. RD. DIST. NO.	STATE	FED. AID PROJ. NO.	SHEET NO.	TOTAL SHEETS
				6	ARK.			
				JOB NO.		061613	113	215

(2) ELECTRICAL DETAILS 2

STATE OF ARKANSAS
LICENSED PROFESSIONAL ENGINEER
No. 21944
JAMES K. SCHMITT
Digitally Signed 06/30/2023

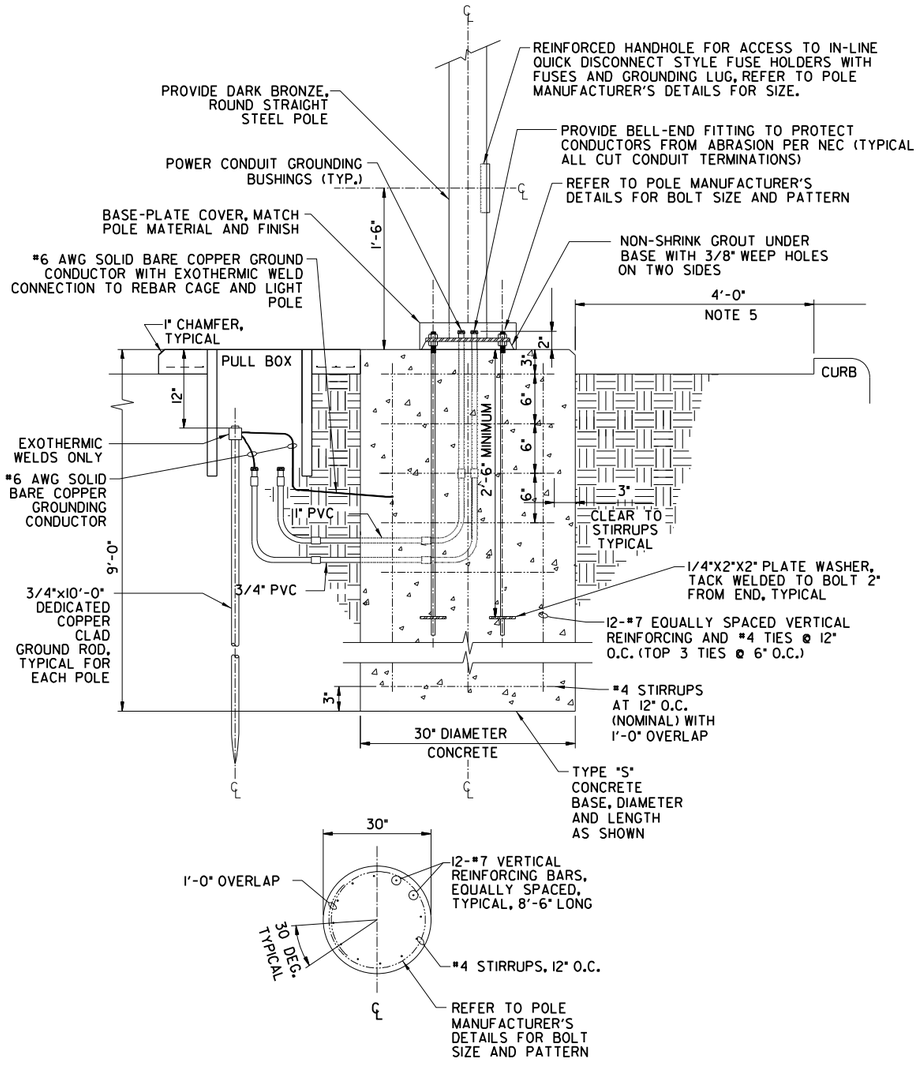

CONCRETE BASE PLAN VIEW

NOTES:

1. ALL HARDWARE SHALL BE CORROSION RESISTANT, GALVANIZED RIGID STEEL.
2. CONSTRUCT FOUNDATION IN ACCORDANCE WITH POLE MANUFACTURER'S GUIDELINES, INSTALLING BOLT TEMPLATE LEVELING UNIT, ANCHOR BOLTS, FULL BASE-PLATE BOLT COVER, AND ACCESSORIES FOR A COMPLETE INSTALLATION.
3. REFER TO POLE SCHEDULE FOR CONDUIT AND CONDUCTOR SIZES. USE LONG SWEEP 90 DEGREE ELBOWS ON ALL CONDUIT BENDS.
4. TIE POLE, EQUIPMENT GROUND AND ALL OTHER METAL EQUIPMENT AND GROUNDING LUGS TOGETHER USING #6 AWG SOLID BARE COPPER AND APPROVED GROUNDING CLAMPS AND CONNECT TO GROUND ROD SYSTEM.
5. MINIMUM 4'-0" CLEAR FROM BACK OF ROAD OR PARKING LOT CURB TO CLOSEST EDGE OF ROAD LIGHTING LIGHT POLE BASE.
6. WHERE POLE FOUNDATION IS ON A SLOPED SURFACE PROVIDE 1' FLAT GRADE EARTH BEFORE RETURNING TO SLOPE. COORDINATE WITH ROADWAY PLANS.
7. METAL POLES SHALL BE GROUNDED PER NEC 410.30.

(A) INDEPENDENT LIGHT POLE FOUNDATION TYPE 'A' DETAIL
SCALE: N.T.S.

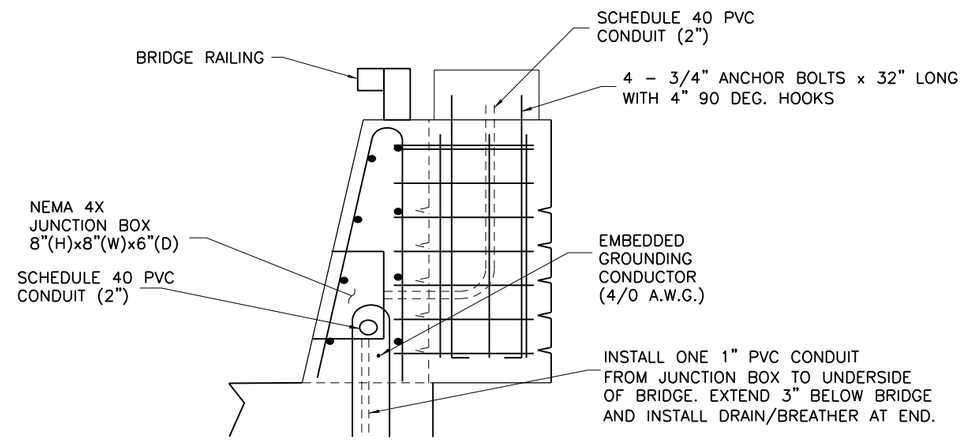

(B) BRIDGE PULLBOX
N.T.S.

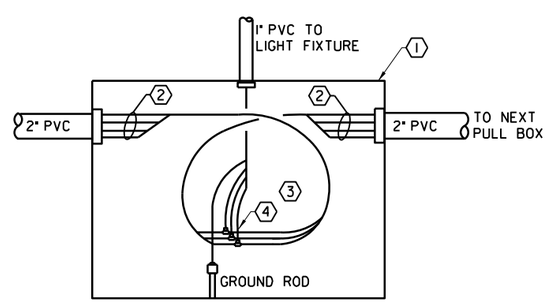

KEYED NOTES:

1. INSTALL TYPE "HD" PULL BOX AS PER ARDOT STANDARD SPECIFICATION 711 AND SP.
2. LOOP THE NEW LIGHTING CIRCUITS WITHIN EACH JUNCTION BOX, SLACK WIRE EQUAL TO ONE COMPLETE LOOP FOR FUTURE USE. NEATLY TRAIN AND LACE BRANCH CIRCUIT BUNDLES TOGETHER WITHIN THE BOX WITH A SEPARATE BUNDLE FOR EACH BRANCH CIRCUIT.
3. ALL CABLES, SPLICES, TERMINATIONS, ETC. SHALL BE RATED 600 VOLTS, WATERPROOF METHOD.
4. ALL CONDUCTORS SHALL BE CONTINUOUS FROM ORIGIN TO EQUIPMENT TERMINATION WITHOUT SPLICES. WHERE LIGHT FIXTURE TAPS ARE REQUIRED, TAPS SHALL BE MADE USING A SEALED, INSULATED PRESSURE CONNECTOR PROVIDING BOTH INSULATION AND JACKET EQUAL TO THE CABLE. CONNECTORS SHALL BE 600V RATED, 150 DEGREE C TEMPERATURE RATED, AND UL LISTED.

(C) INTERIOR PULLBOX VIEW
SCALE: N.T.S.

BVWells 6/29/2023 11:22:50 AM
WORKSPACE: Odot_2017
\\garverinc.local\GData\Projects\202\201\0028 - ARDOT 06613 I-40 Strs and Apprs\Drawings\e061613x2_ED2.dgn
REVISED DATE:

DATE REVISED	DATE FILMED	DATE REVISED	DATE FILMED	FED. RD. DIST. NO.	STATE	FED. AID PROJ. NO.	SHEET NO.	TOTAL SHEETS
				6	ARK.			
				JOB NO.		061613	114	215

(2) ELECTRICAL DETAILS 3

STATE OF ARKANSAS
LICENSED PROFESSIONAL ENGINEER
No. 21740
JAMES K. SCHMITT
Digitally Signed 06/30/2023

VOLTAGE DROP CALCULATIONS

Panel ID	Location Description	# of Sets	Wire Size	One-Way Length (ft)	Line Current (Amps)	Voltage (Line-to-Neutral)	Phase	Power Factor (100% or 85%)	Wire Type	Conduit Type	Impedance (Ω/1000 ft)	Voltage Drop (Volts)	%VD
Site 1	XFMR-PB	1	6	250	6.00	240	1	85%	Aluminum	PVC	0.71	2.13	0.89%
Site 1	PB-L6	1	6	40	1.00	238	1	85%	Aluminum	PVC	0.71	0.0568	0.02%
Site 1	PB-L5	1	6	150	5.00	238	1	85%	Aluminum	PVC	0.71	1.065	0.45%
Site 1	L5-L4	1	6	190	4.00	237	1	85%	Aluminum	PVC	0.71	1.0792	0.46%
Site 1	L4-L3	1	6	190	3.00	236	1	85%	Aluminum	PVC	0.71	0.8094	0.34%
Site 1	L3-L2	1	6	140	2.00	235	1	85%	Aluminum	PVC	0.71	0.3976	0.17%
Site 1	L2-L1	1	6	210	1.00	234	1	85%	Aluminum	PVC	0.71	0.2982	0.13%
												Total %VD	2.45%
Project:	21T01028												

VOLTAGE DROP CALCULATIONS

Panel ID	Location Description	# of Sets	Wire Size	One-Way Length (ft)	Line Current (Amps)	Voltage (Line-to-Neutral)	Phase	Power Factor (100% or 85%)	Wire Type	Conduit Type	Impedance (Ω/1000 ft)	Voltage Drop (Volts)	%VD
Site 2	XFMR-L7	1	10	500	0.90	240	1	85%	Aluminum	PVC	1.8	1.62	0.68%
												Total %VD	0.68%
Project:	21T01028												

VOLTAGE DROP CALCULATIONS

Panel ID	Location Description	# of Sets	Wire Size	One-Way Length (ft)	Line Current (Amps)	Voltage (Line-to-Neutral)	Phase	Power Factor (100% or 85%)	Wire Type	Conduit Type	Impedance (Ω/1000 ft)	Voltage Drop (Volts)	%VD
Site 3	XFMR-EXST	1	6	420	5.00	240	1	85%	Aluminum	PVC	0.71	2.982	1.24%
Site 3	EXST-PB	1	6	340	3.00	237	1	85%	Aluminum	PVC	0.71	1.4484	0.61%
Site 3	PB-L8	1	6	230	1.00	236	1	85%	Aluminum	PVC	0.71	0.3266	0.14%
Site 3	PB-L10	1	6	380	2.00	235	1	85%	Aluminum	PVC	0.71	1.0792	0.46%
Site 3	L10-L9	1	6	225	1.00	234	1	85%	Aluminum	PVC	0.71	0.3195	0.14%
												Total %VD	2.59%
Project:	21T01028												

BVWells 6/29/2023 11:22:58 AM
WORKSPACE: TxDOT-OpenRoads
L:\2021\21T01028 - ARDOT 061613 I-40 Strs and Apprs\Drawings\e061613x2_ED3.dgn
REVISED DATE:

DATE REVISED	DATE FILMED	DATE REVISED	DATE FILMED	FED. ROAD DIST. NO.	STATE	FED. AID PROJ. NO.	SHEET NO.	TOTAL SHEETS
				6	ARK.			
				JOB NO.		061613	115	215
				1	07605 - LAYOUT - 65924			

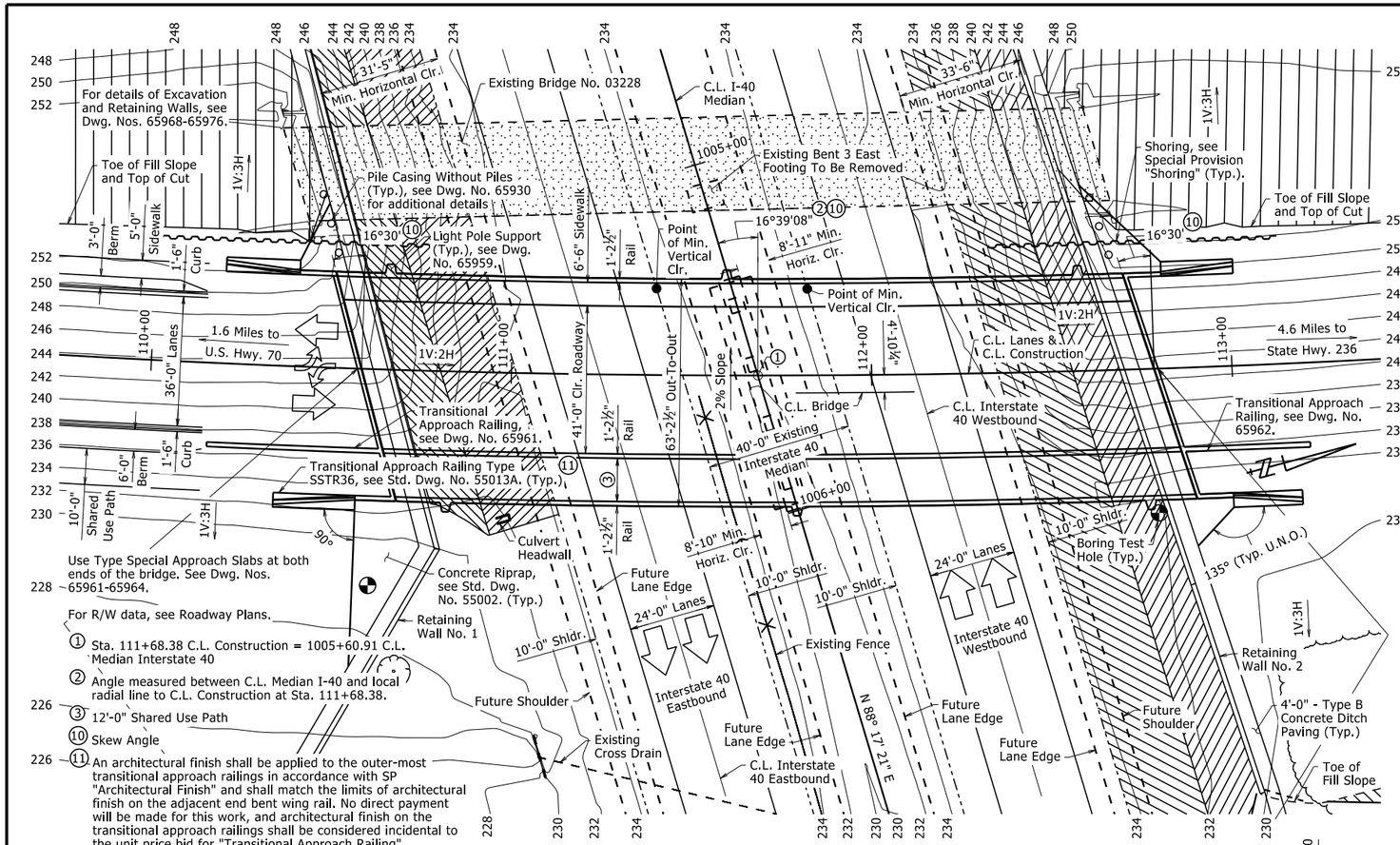

PLAN

Stations shown are along C.L. Construction. Elevations shown are actual top of deck elevations at C.L. Construction. Any vertical dimension referenced to C.L. Deck is based on actual top of deck elevation at C.L. Construction. See "SUPERELEVATION SKETCH" on Dwg. No. 65925. C.L. Bridge is on a 1°45' curve left. All longitudinal lines are concentric to C.L. Construction. All bents are skewed right forward at the angle shown to a line radial to C.L. Construction. Skew is measured at C.L. Bent for Bent 2 and at C.L. joint for end bents.

HORIZONTAL CURVE DATA

(Along C.L. Construction)
PI Sta. 114+06.51
Δ = 16°32'20" Lt.
D = 1°45'00"
T = 475.85'
L = 945.08'
R = 3274.04'
P.C. Sta. 109+30.67
P.T. Sta. 118+75.75

VERTICAL CURVE

Along C.L. Construction (Not to Scale)

PVI Sta. 111+30.00
Elev. 266.39
+ 5.00%
- 4.36%
L = 700'

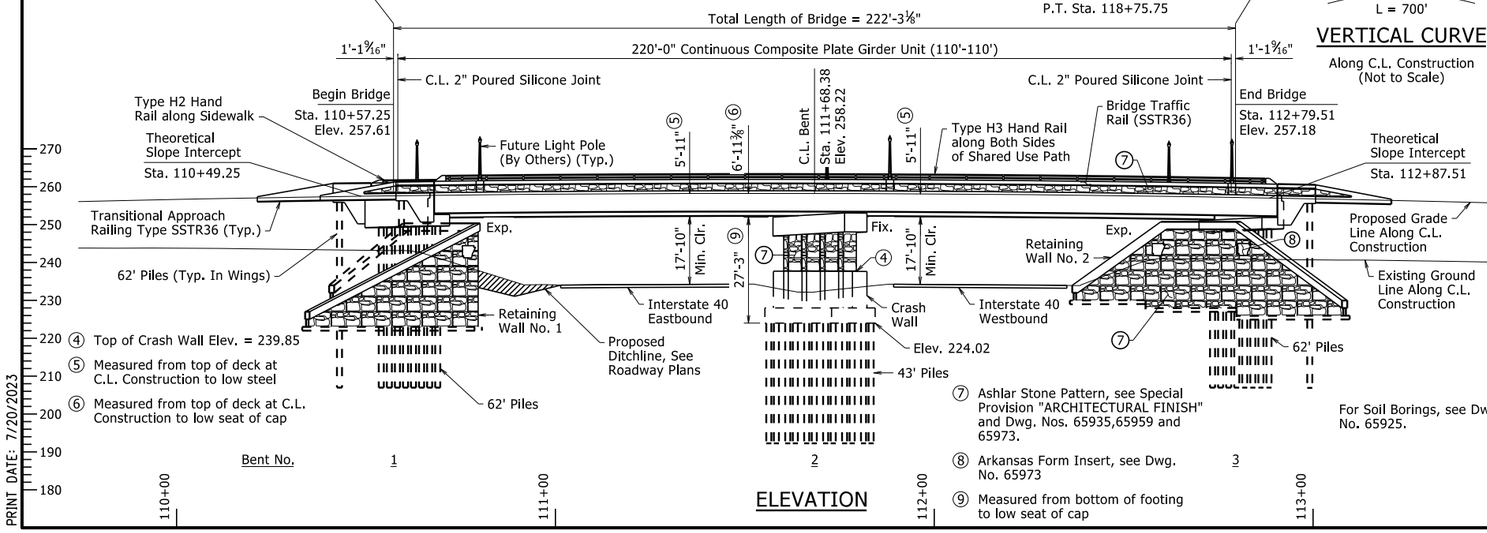

ELEVATION

For Soil Borings, see Dwg. No. 65925.

GENERAL NOTES

BENCHMARK: Vertical Control Data are shown on the Survey Control Data Sheets.

CONSTRUCTION SPECIFICATIONS: Arkansas State Highway and Transportation Department Standard Specifications for Highway Construction (2014 edition) with applicable Supplemental Specifications and Special Provisions. Section and Subsection refer to the Standard Construction Specifications unless otherwise noted in the Plans.

DESIGN SPECIFICATIONS: AASHTO LRFD Bridge Design Specifications, Eighth Edition (2017).

LIVE LOADING: HL-93

SEISMIC ZONE: 2 SD1: 0.25 SITE CLASS: D

SEISMIC OPERATIONAL CLASSIFICATION: Essential

MATERIALS AND STRENGTHS:

Class S(AE) Concrete (superstructure)	f'c = 4,000 psi
Class S Concrete (substructure)	f'c = 3,500 psi
Reinforcing Steel (AASHTO M 31 or M 322, Type A)	fy = 60,000 psi
Structural Steel (ASTM A709, Gr. 50)	Fy = 50,000 psi
Structural Steel (ASTM A709, Gr. 36)	Fy = 36,000 psi

BORING LOGS: Boring logs may be obtained from the Construction Contract Development Section of the Program Management Division.

STEEL SHELL PILING: Piling in Bents 1 and 3 shall be 18" diameter concrete filled steel shell piles and shall be driven to a minimum ultimate bearing capacity of 199 tons per pile. Piling in Bent 2 shall be 18" diameter concrete filled steel shell piles and shall be driven to a minimum ultimate bearing capacity of 245 tons per pile. All piling shall be driven with an approved air, steam, or diesel hammer to a minimum tip elevation of 207.0 or lower at Bents 1 and 3 and to a minimum tip elevation of 192.3 or lower at Bent 2. Piling in end bents shall be driven after embankment to bottom of cap is in place. Lengths of piling shown are assumed for estimating quantities only. Actual lengths are to be determined in the field. No additional payment will be made for cut-off or build-up. Test piles are not required but may be driven for the Contractor's information in accordance with Subsection 805.08(g). No piles will be paid for as test piles.

DRIVING SYSTEM: The driving system approval and the ultimate bearing capacity determination for piling shall be based on the requirements of Subsection 805.09(b), "Method B Wave Equation Analysis (WEAP)". It is estimated that the minimum rated hammer energy required to obtain the ultimate bearing capacity for Bents 1 and 3 will be 40,000 foot pounds per blow and Bent 2 will be 50,000 foot pounds per blow.

PILE CASINGS: Pile casings are required for piling within retaining walls at end bents. Casings shall be installed prior to or during the embankment construction and shall extend from top of leveling pad to bottom of cap. Pile casing material shall be of sufficient strength to retain its original form free from harmful distortions after compaction of the fill material surrounding it. The minimum inside diameter of the casing shall be at least 4" greater than the outside diameter of the steel shell pile. Piles shall be driven throught the open casings after embankment to bottom of cap is in place. After driving is comprete, the pile casins shall be filled with Class S Concrete, an approved non-shrink grout, mixture used for Portland Cement Concrete Pavement, or other approved material in a single continuous operation to completely fill voids. Pile casings and concrete will not be paid for directly but shall be considered subsidiary to the item "Steel Shell Piling (18" Dia.)".

PILE CASINGS WITHOUT PILES: Additional pile casings are required in Bents 1 & 3 in accordance with Dwg. No. 65930 to provide for future widening. These casings shall be installed prior to or during embankment construction and shall extend from top of leveling pad to approximately one foot below the finished surface of concrete riprap. Pile casing diameter and material shall conform to the above. No piling shall be driven through these casings, but they shall be kept clean from debris and capped at the top with a durable waterproof material as approved by the Engineer. Payment for this work and materials will be considered subsidiary to the item "Steel Shell Piling (18" Dia.)".

PILE FOOTINGS: The top of the footings at Bent 2 shall be set a minimum of 2.0' below natural ground or at the elevations shown on the plans, whichever is lower. Foundations for footings shall be prepared in accordance with Subsection 801.04. Foundation piles shall not be driven until after the excavation to bottom of footing is complete. Excavations shall be backfilled and compacted to the level of the existing ground in accordance with Subsection 801.08.

PAINTING: All Grade 50 structural steel, except galvanized members and surfaces in contact with concrete, shall be painted as specified in Subsection 807.75. The color of paint shall be Dark Brown and shall match Federal Standard 595B, Color Chip No. 20108.

POWDER COATING: All metal bridge railing shall receive a powder coating finish. The color of paint shall be Dark Brown equal or close to Federal Std. 595B, Color Chip No. 20108 and as approved by the Engineer. See Std. Dwg. No. 55015 and Dwg. No. 65940 for additional information.

TEXTURED COATING FINISH: Class 3 Textured Coating Finish shall be applied to bridge and retaining wall surfaces as specified in Special Provision "Textured Coating Finish" and in accordance with Subsection 802.19(b)(3). Textured Coating Finish shall not be applied on surfaces where Class 2 Protective Surface Treatment is applied.

BRIDGE DECK: The concrete bridge deck, except sidewalks and shared use path, shall be given a tine finish as specified for final finishing in Subsection 802.19 for Class 5 Tined Bridge Roadway Surface Finish. Sidewalks and shared use path shall be given a Class 6 Broomed Finish.

PROTECTIVE SURFACE TREATMENT: Class 2 Protective Surface Treatment shall be applied to the roadway surface, sidewalk surface (including curbing), shared use path surface, and to all bridge railing surfaces not receiving Textured Coating Finish in accordance with Section 803. See Dwg. No. 65937 for additional details.

DETAIL DRAWINGS:	DRAWING NO(S).
End Bents	65926-65930
Intermediate Bents	65931-65933
Elastomeric Bearings	65934
220' Continuous Plate Girder Unit	65935-65940
Common Superstructure Details	65959-65960
General Notes For Steel Bridge Structures	55006
Details For Steel Bridge Structures	55007
Poured Silicone Joints	55008
Transitional Approach Railing	55013A
Type H2 Railing	55015
Type H3 Railing	65940
Steel Shell Piling	55021
Bridge Traffic Rail	55070

STATE OF ARKANSAS
Jul 20 2023 10:16 AM
LICENSED PROFESSIONAL ENGINEER
No. 9235
CHARLES R. ELLIS
BRIDGE ENGINEER

SHEET 1 OF 2
LAYOUT OF BRIDGE
HIGHWAY 31 OVER INTERSTATE 40
I-40 STRS. & APPRS. (HWYS. 13 & 31)
(CARLISLE & LONOKE) (S)
LONOKE COUNTY

ROUTE 31 SEC. 3
ARKANSAS STATE HIGHWAY COMMISSION
LITTLE ROCK, ARK.

DRAWN BY: DKS DATE: 06/2021 FILENAME: b061613x1_l1.dgn
CHECKED BY: JSQ DATE: 9/23/2021 SCALE: 1" = 20'
DESIGNED BY: DKS DATE: 06/2021
BRIDGE NO. 07605 DRAWING NO. 65924

PRINT DATE: 7/20/2023

DATE REVISED	DATE FILMED	DATE REVISED	DATE FILMED	FED. ROAD DIST. NO.	STATE	FED. AID PROJ. NO.	SHEET NO.	TOTAL SHEETS
				6	ARK.			
				JOB NO.		061613	116	215
				07605 - LAYOUT - 65925				

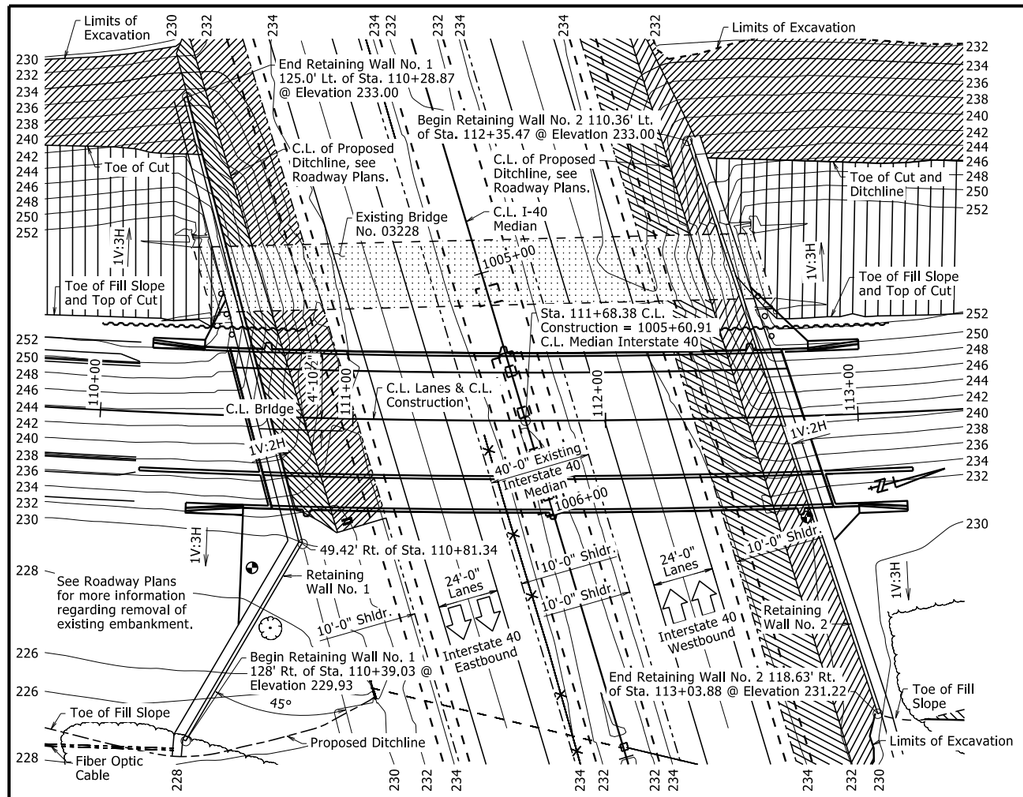

EXCAVATION PLAN

1"=30'-0"

"N" VALUES

Sta. 110+62 - 60' Right of C.L. Construction

0.5- 1.5,N=13
3.0- 4.0,N=22
5.5- 6.5,N=19
10.5- 11.5,N=19
15.5- 16.5,N=11
20.5- 21.5,N=6
25.5- 26.5,N=15
30.5- 31.5,N=10
35.5- 36.5,N=16
40.5- 41.5,N=28
45.5- 46.5,N=47
50.5- 51.5,N=26
55.5- 56.5,N=38
60.5- 61.5,N=88
65.5- 66.5,N=64
70.5- 71.5,N=74
75.5- 76.5,N=20
80.5- 81.5,N=61
85.5- 86.5,N=63
90.5- 91.5,N=52
95.5- 96.5,N=66
100.5-101.5,N=86

Sta. 112+78.5 - 40' Right of C.L. Construction

0.5- 1.5,N=18
3.0- 4.0,N=13
8.0- 9.0,N=19
15.5- 16.5,N=8
20.5- 21.5,N=8
25.5- 26.5,N=4
30.5- 31.5,N=24
35.5- 36.5,N=18
40.5- 41.5,N=34
45.5- 46.5,N=50
50.5- 51.5,N=37
55.5- 56.5,N=91
60.5- 61.5,N=53
65.5- 66.5,N=70
70.5- 71.5,N=20
75.5- 76.5,N=86
80.5- 81.5,N=48
85.5- 86.5,N=64
90.5- 91.5,N=84
95.0- 95.4,N=40(5")
100.5-101.4,N=78(11")

BORING LEGEND

A1-Moist, Stiff, Reddish Brown Lean Clay
B1-Moist, Very Stiff, Reddish Brown Clay
C1-Moist, Reddish Brown Silt
D1-Moist, Stiff, Reddish Brown Clay
E1-Wet, Medium Stiff, Brown Lean Clay
F1-Wet, Stiff, Gray Silty Clay
G1-Moist, Loose, Brown Silt with Sand
H1-Wet, Medium Dense, Brown Silty Sand with Some Gravel
J1-Wet, Medium Dense, Brown Poorly Graded Sand with Silt
K1-Wet, Dense, Brown Poorly Graded Sand with Silt and Gravel
L1-Wet, Medium Dense, Brown Sand with Some Gravel
M1-Wet, Dense, Brown Sand
N1-Wet, Very Dense, Brown Sand
P1-Sand and Gravel
Q1-Wet, Very Dense, Brown Sand with Some Gravel
R1-Wet, Very Dense, Brown Poorly Graded Sand with Silt and Gravel
S1-Moist, Medium Dense, Brown Silt with Sand
T1-Moist, Medium Dense, Brown Silt
U1-Moist, Reddish Brown Fat Clay
V1-Moist, Reddish Brown Lean Clay
W1-Wet, Reddish Brown Silt
X1-Moist, Loose, Reddish Brown Silt
Y1-Moist, Very Loose, Brown Silt
Z1-Moist, Medium Dense, Brown Silt with Fine Sand
A2-Wet, Medium Dense, Gray Fine Sandy Silt
B2-Wet, Dense, Brown Silty Fine Sand with Traces of Gravel
C2-Wet, Dense, Gray Poorly Graded Fine Sand with Silt and Some Gravel
D2-Wet, Dense, Gray Silty Fine Sand with Some Gravel
E2-Wet, Very Dense, Brown Silty Fine Sand with Traces of Gravel
F2-Wet, Very Dense, Brown Silty Fine Sand
G2-Wet, Medium Dense, Brown Poorly Graded Fine Sand with Silt and Organic Matter (Wood)
H2-Wet, Very Dense, Gray Poorly Graded Fine Sand with Silt and Gravel
J2-Wet, Dense, Brown Well Graded Fine Sand with Silt and Gravel
K2-Wet, Very Dense, Brown Poorly Graded Fine Sand with Silt and Gravel
L2-Wet, Very Dense, Brown Silty Fine Sand with Gravel

GENERAL NOTES (CONT.)

EXISTING BRIDGE: Existing Bridge No. 03228 (Log Mile 1.64) is 31.7' wide (25.9' clear roadway) and 222' long and consists of steel I-beam spans (4 spans total) supported by concrete columns on concrete pile footings. The existing bridge is located approximately 60' west from the proposed new bridge. Plans of the existing structure, if available, may be obtained upon request to the Construction Contract Development Section of the Program Management Division.

REMOVAL AND SALVAGE: After the new bridge is open to traffic, the Contractor shall remove existing Bridge No. 03228, including concrete riprap, in accordance with Section 205. Existing Bent 3 East Footing shall be completely removed. Removal of concrete riprap and Bent 3 East Footing will not be paid for directly but shall be considered subsidiary to the item "Removal of Existing Bridge Structure (Site No. _)". All material from the existing bridge shall become the property of the Contractor.

MAINTENANCE OF TRAFFIC: See Roadway Plans.

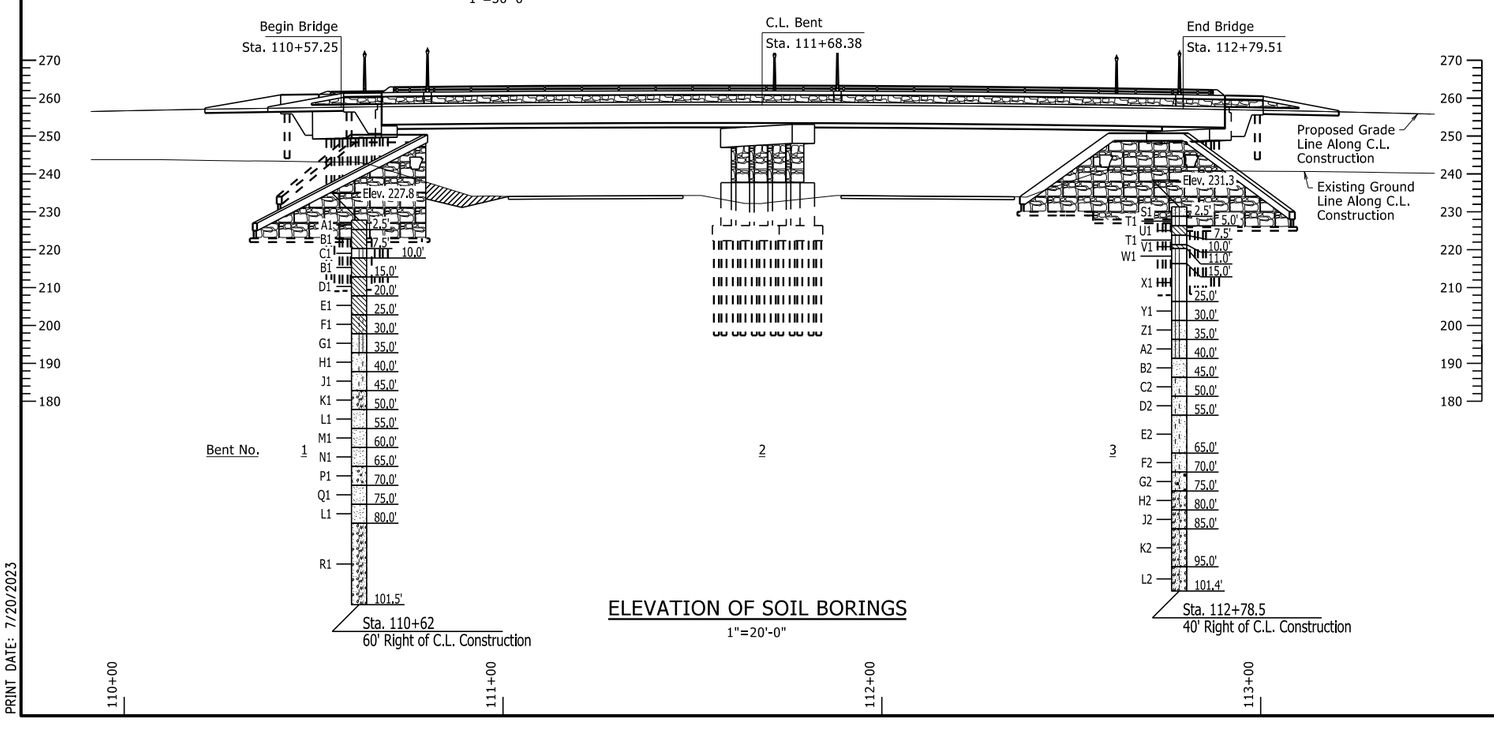

ELEVATION OF SOIL BORINGS

1"=20'-0"

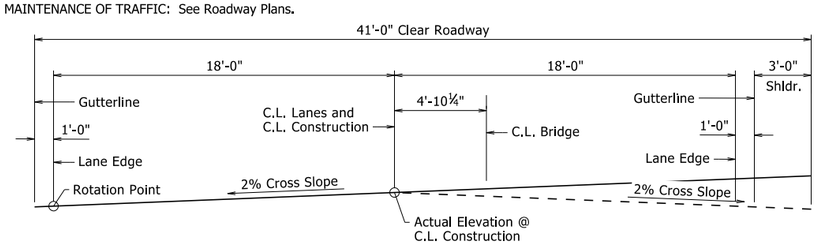

SUPERELEVATION SKETCH

Looking Ahead
No Scale

STATE OF ARKANSAS
Jul 20 2023 10:16 AM
LICENSED PROFESSIONAL ENGINEER
No. 9235
CHARLES R. ELLIS
BRIDGE ENGINEER

SHEET 2 OF 2
LAYOUT OF BRIDGE
HIGHWAY 31 OVER INTERSTATE 40
I-40 STRS. & APPRS. (HWYS. 13 & 31)
(CARLISLE & LONOKE) (S)
LONOKE COUNTY

ROUTE 31 SEC. 3

ARKANSAS STATE HIGHWAY COMMISSION

LITTLE ROCK, ARK.

DRAWN BY: DKS DATE: 06/2021 FILENAME: b061613x1_l1.dgn
CHECKED BY: JSQ DATE: 9/23/2021 SCALE: As Noted
DESIGNED BY: DKS DATE: 06/2021

BRIDGE NO. 07605 DRAWING NO. 65925

PRINT DATE: 7/20/2023

DATE REVISED	DATE FILMED	DATE REVISED	DATE FILMED	FED. ROAD DIST. NO.	STATE	FED. AID PROJ. NO.	SHEET NO.	TOTAL SHEETS
				6	ARK.			
				JOB NO.		061613	117	215
				1	07605	END BENTS		65926

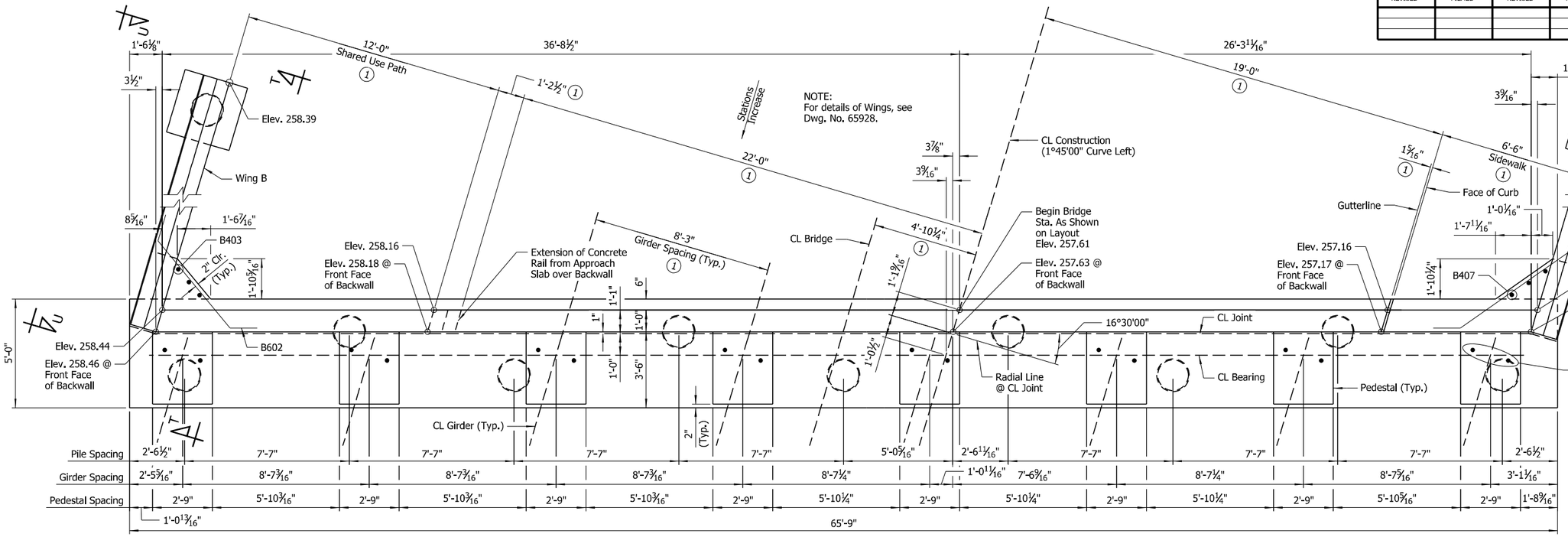

PLAN - END BENT NO. 1

Scale: ⅜" = 1'-0"

NOTE:
No portion of the backwall shall be poured until the girders are in place. The portion of the backwall above the optional construction joint at the paving bracket shall not be placed until the adjacent deck pour has been made. See Std. Dwg. No. 55008, "EXPANSION DEVICE INSTALLATION AT END BENTS", for additional information.

No heavy construction equipment shall be allowed within 10' of the backwall until the deck concrete placement for the adjacent span has been completed unless MSE strap reinforcing has been designed to accommodate these loads. See "END BENT STRAP DETAIL" on Dwg. No. 65929.

LEGEND

EF = Each Face

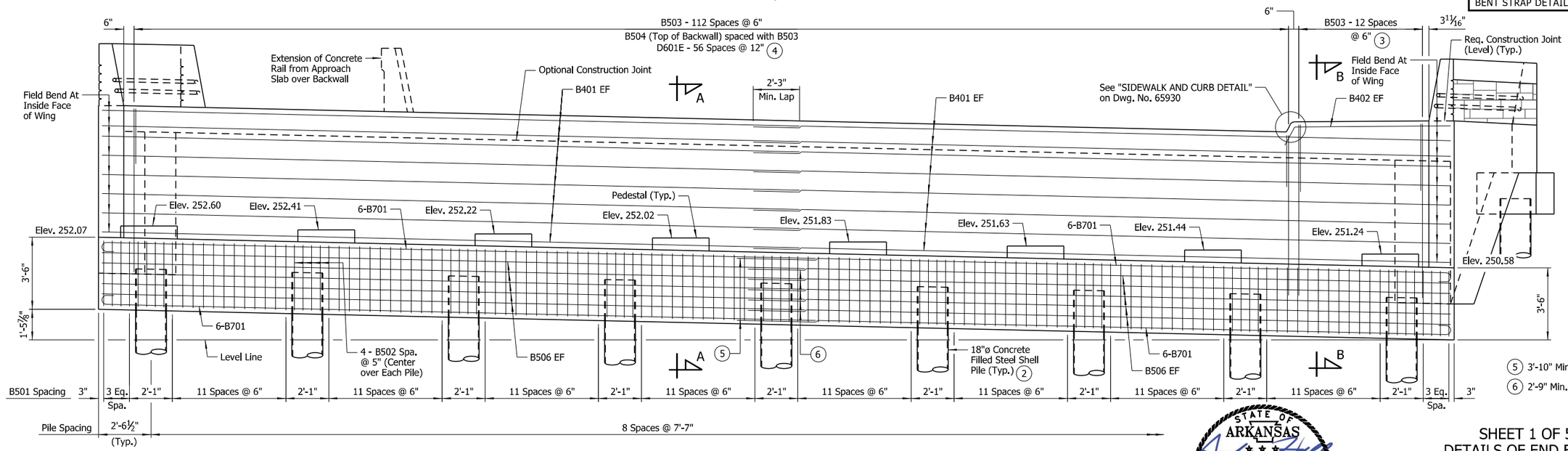

5 3'-10" Min. Lap Splice for Bars B701

6 2'-9" Min. Lap Splice for Bars B506

ELEVATION - END BENT NO. 1

(Looking Back)
Scale: ⅜" = 1'-0"

NOTES:
CL Construction is on a 1°45'00" curve left.

All longitudinal lines are on curves concentric with CL Construction.

For "FOUNDATION PLAN - END BENT NO. 1", "BAR LIST (END BENT NO. 1)" and "BAR BENDING DIAGRAMS", see Dwg. No. 65930.

For "SECTION A-A", "SECTION B-B", "END BENT WALL ARMOR DETAIL" and "TYPICAL PEDESTAL DETAIL", see Dwg. No. 65929.

For "VIEW T-T" and "VIEW U-U", see Dwg. No. 65928.

NOTES:
Class 2 Protective Surface Treatment shall be applied to the top of the backwall (including sidewalk and curbing) and to the roadway face and top of the wing rails.

Class 3 Textured Coating Finish shall be applied to bridge surfaces as specified in Special Provision "TEXTURED COATING FINISH" and in accordance with Subsection 802.19(b)(3). Textured Coating Finish shall not be applied on surfaces where Class 2 Protective Surface Treatment is applied.

For "GENERAL NOTES", see Dwg. No. 65930.

1. Measured Radially
2. See Std. Dwg. No. 55021 for details of piles and pile anchorage. Pile anchorage shall be placed to minimize interference with anchor bolts and reinforcing in cap.
3. B505 (Top of Backwall) spaced with B503
4. Horizontal leg of D601E shall be placed parallel to CL Bridge.

STATE OF ARKANSAS
LICENSED PROFESSIONAL ENGINEER
No.14498
ADAM B. HALL

DIGITALLY SIGNED 6/30/2023
BRIDGE ENGINEER

SHEET 1 OF 5
DETAILS OF END BENTS
HIGHWAY 31 OVER I-40

ROUTE SEC.

ARKANSAS STATE HIGHWAY COMMISSION

LITTLE ROCK, ARK.

DRAWN BY:	CWT	DATE:	DEC. 2022	FILENAME:	b061613x1_a1.dgn
CHECKED BY:	ABH	DATE:	DEC. 2022	SCALE:	As Shown
DESIGNED BY:	CSW	DATE:	DEC. 2022		

BRIDGE NO. 07605 DRAWING NO. 65926

abhall 6/29/2023 1:37:01 PM
WORKSPACE:ARDOT Bridge (2019)
L:\2021\21T01028 - ARDOT 061613 I-40 Strs and Apprs\Drawings\b061613x1_S201_AB.dgn
REVISED DATE:

DATE REVISED	DATE FILMED	DATE REVISED	DATE FILMED	FED. ROAD DIST. NO.	STATE	FED. AID PROJ. NO.	SHEET NO.	TOTAL SHEETS
				6	ARK.			
				JOB NO.		061613	118	215
				07605		END BENTS		65927

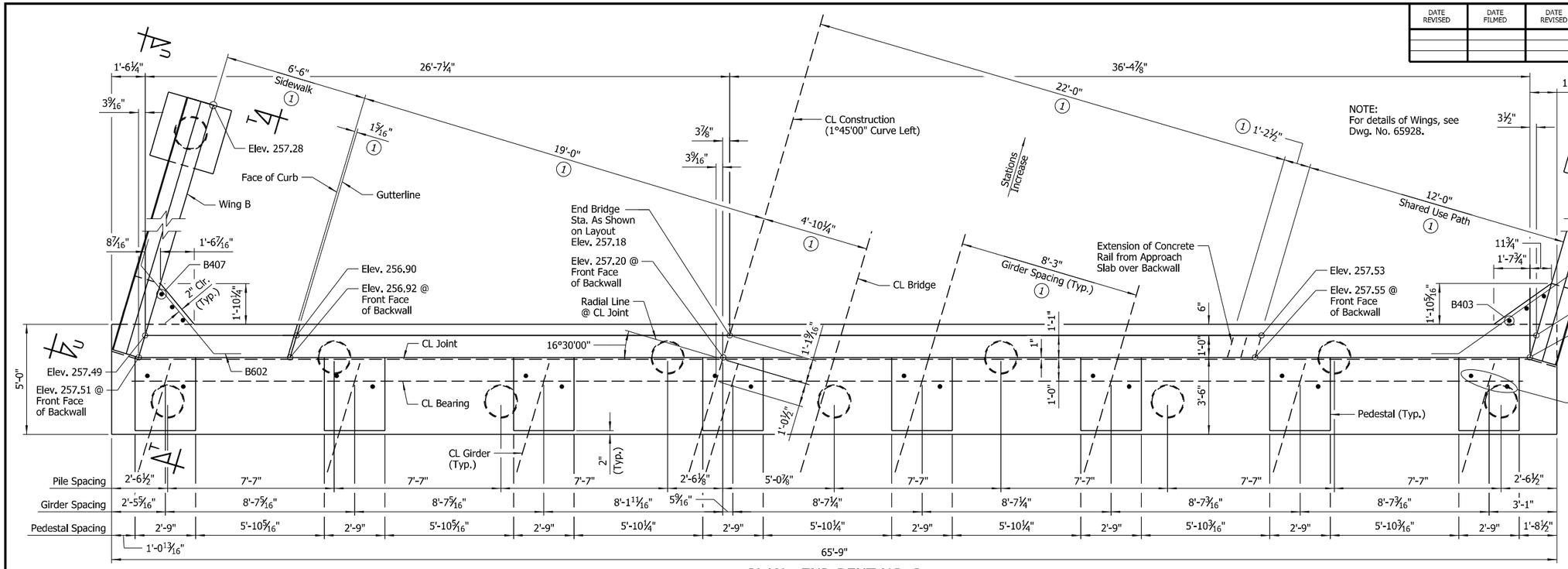

PLAN - END BENT NO. 3

Scale: ⅜" = 1'-0"

NOTE:
For details of Wings, see Dwg. No. 65928.

18" ø Concrete Filled Steel Shell Pile (Typ.) See "FOUNDATION PLAN - END BENT NO. 3" on Dwg. No. 65930 for additional details (2)

LEGEND

EF = Each Face

NOTE:
No portion of the backwall shall be poured until the girders are in place. The portion of the backwall above the optional construction joint at the paving bracket shall not be placed until the adjacent deck pour has been made. See Std. Dwg. No. 55008, "EXPANSION DEVICE INSTALLATION AT END BENTS", for additional information.

No heavy construction equipment shall be allowed within 10' of the backwall until the deck concrete placement for the adjacent span has been completed unless MSE strap reinforcing has been designed to accommodate these loads. See "END BENT STRAP DETAIL" on Dwg. No. 65929.

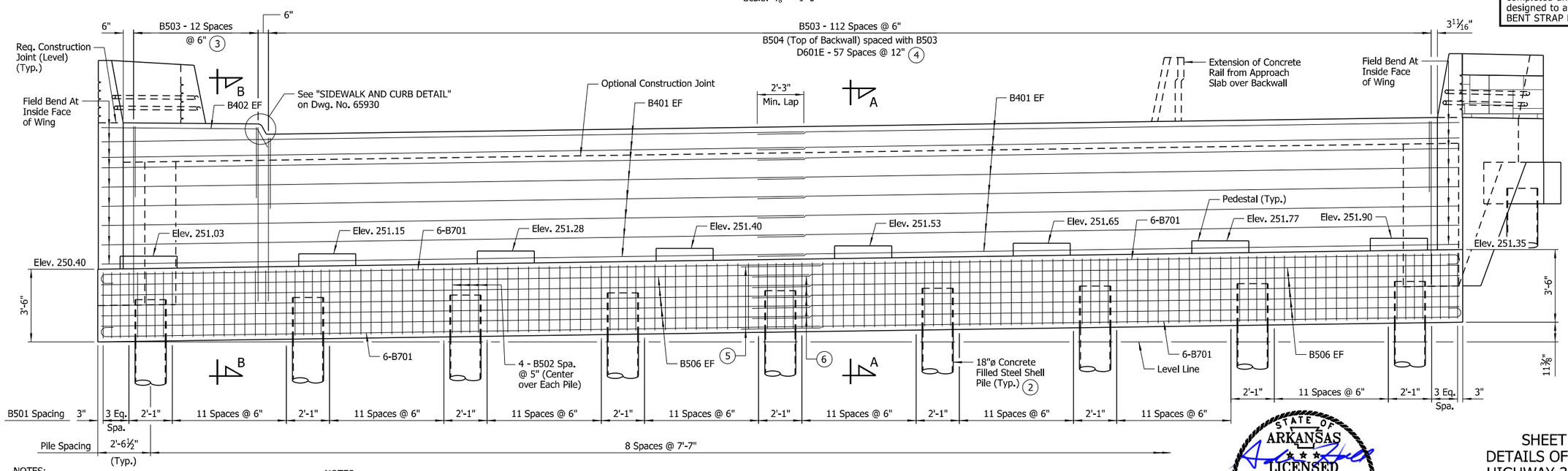

ELEVATION - END BENT NO. 3

(Looking Ahead)
Scale: ⅜" = 1'-0"

(5) 3'-10" Min. Lap Splice for Bars B701

(6) 2'-9" Min. Lap Splice for Bars B506

NOTES:
CL Construction is on a 1°45'00" curve left.

All longitudinal lines are on curves concentric with CL Construction.

For "FOUNDATION PLAN - END BENT NO. 3", "BAR LIST (END BENT NO. 3)" and "BAR BENDING DIAGRAMS", see Dwg. No. 65930.

For "SECTION A-A", "SECTION B-B", "END BENT WALL ARMOR DETAIL" and "TYPICAL PEDESTAL DETAIL", see Dwg. No. 65929.

For "VIEW T-T" and "VIEW U-U", see Dwg. No. 65928.

NOTES:
Class 2 Protective Surface Treatment shall be applied to the top of the backwall (including sidewalk and curbing) and to the roadway face and top of the wing rails.

Class 3 Textured Coating Finish shall be applied to bridge surfaces as specified in Special Provision "TEXTURED COATING FINISH" and in accordance with Subsection 802.19(b)(3). Textured Coating Finish shall not be applied on surfaces where Class 2 Protective Surface Treatment is applied.

For "GENERAL NOTES", see Dwg. No. 65930.

(1) Measured Radially

(2) See Std. Dwg. No. 55021 for details of piles and pile anchorage. Pile anchorage shall be placed to minimize interference with anchor bolts and reinforcing in cap.

(3) B505 (Top of Backwall) spaced with B503

(4) Horizontal leg of D601E shall be placed parallel to CL Bridge.

STATE OF ARKANSAS
LICENSED PROFESSIONAL ENGINEER
No.14498
ADAM B. HALL

DIGITALLY SIGNED 6/30/2023
BRIDGE ENGINEER

SHEET 2 OF 5
DETAILS OF END BENTS
HIGHWAY 31 OVER I-40

ROUTE SEC.

ARKANSAS STATE HIGHWAY COMMISSION

LITTLE ROCK, ARK.

DRAWN BY:	CWT	DATE:	DEC. 2022	FILENAME:	b061613x1_a2.dgn
CHECKED BY:	ABH	DATE:	DEC. 2022	SCALE:	As Shown
DESIGNED BY:	CSW	DATE:	DEC. 2022		

BRIDGE NO. 07605 DRAWING NO. 65927

6/29/2023 1:37:02 PM
abhall
WORKSPACE\ARDOT Bridge (2019)
L:\2021\21T01028 - ARDOT 061613 I-40 Strs and Apprs\Drawings\b061613x1_S202_AB.dgn
REVISED DATE:

DATE REVISED	DATE FILMED	DATE REVISED	DATE FILMED	FED. ROAD DIST. NO.	STATE	FED. AID PROJ. NO.	SHEET NO.	TOTAL SHEETS
				6	ARK.			
				JOB NO.		061613	119	215
				07605		END BENTS		65928

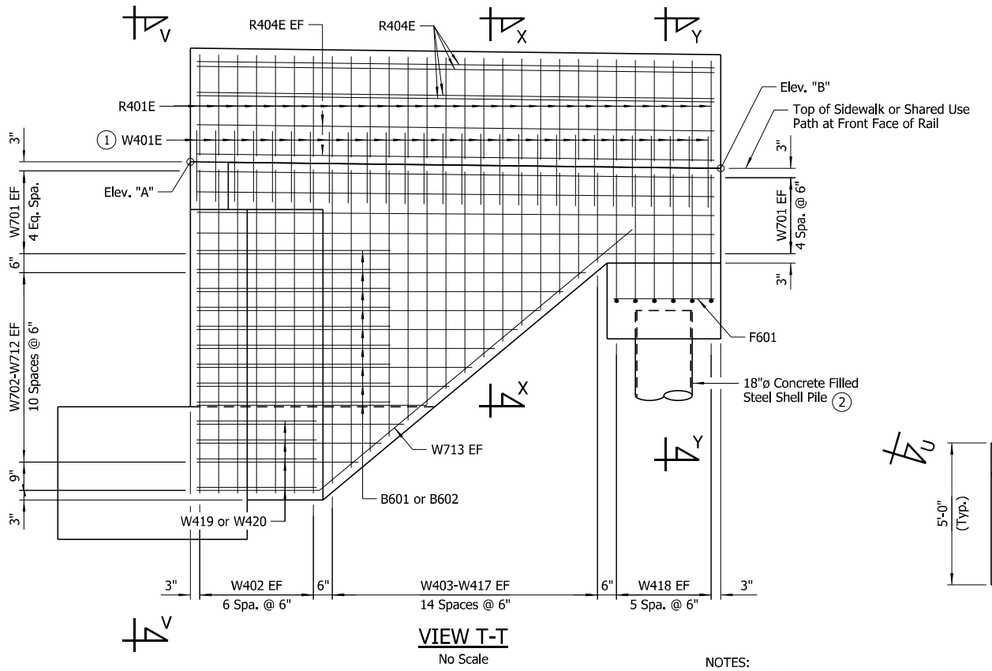

VIEW T-T

No Scale

LEGEND

U.N.O. = Unless Noted Otherwise
EF = Each Face

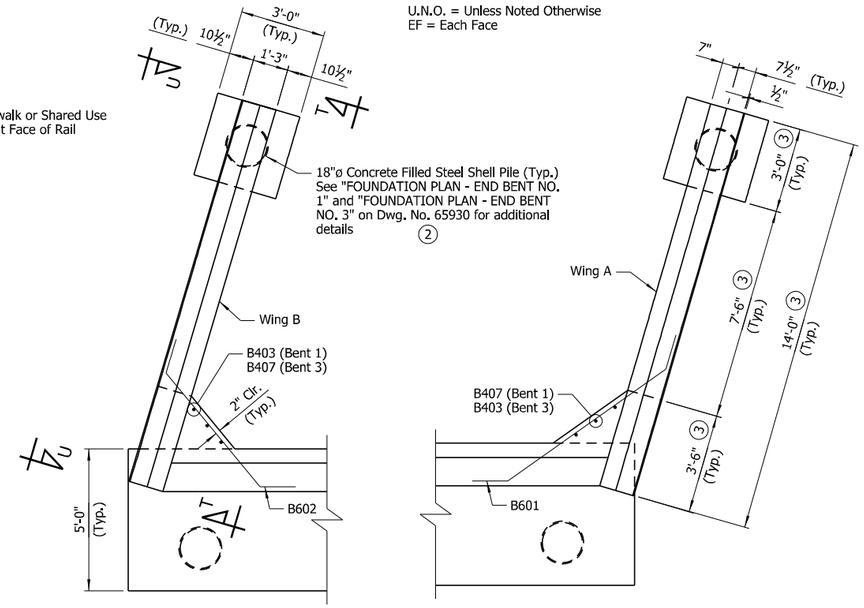

NOTES:
Form liner shall be a maximum depth of 1½" to provide a minimum clearance of 1½" to rail reinforcing.

See Special Provision "TEXTURED COATING FINISH" for additional information regarding the placement of the Class 3 Textured Coating Finish.

PLAN OF RAIL

Scale: ⅜" = 1'-0"

1. See "DETAIL A" for placement of W401E bars.
2. "ALTERNATE PILE ANCHORAGE DETAIL" on Std. Dwg. No. 55021 required to minimize interference with reinforcing in footing.
3. Measured Along Front Face of Rail

NOTES:
For locations of "VIEW T-T" & "VIEW U-U", see Dwg. Nos. 65926 and 65927.

For additional details of the bridge traffic rail on wing, see Std. Dwg. No. 55070.

For "SECTION Z-Z", see Dwg. No. 65929.

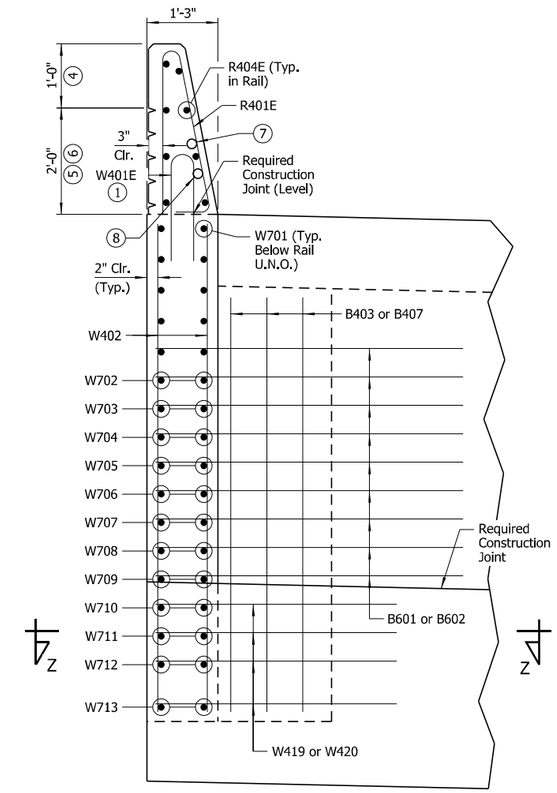

VIEW V-V

No Scale

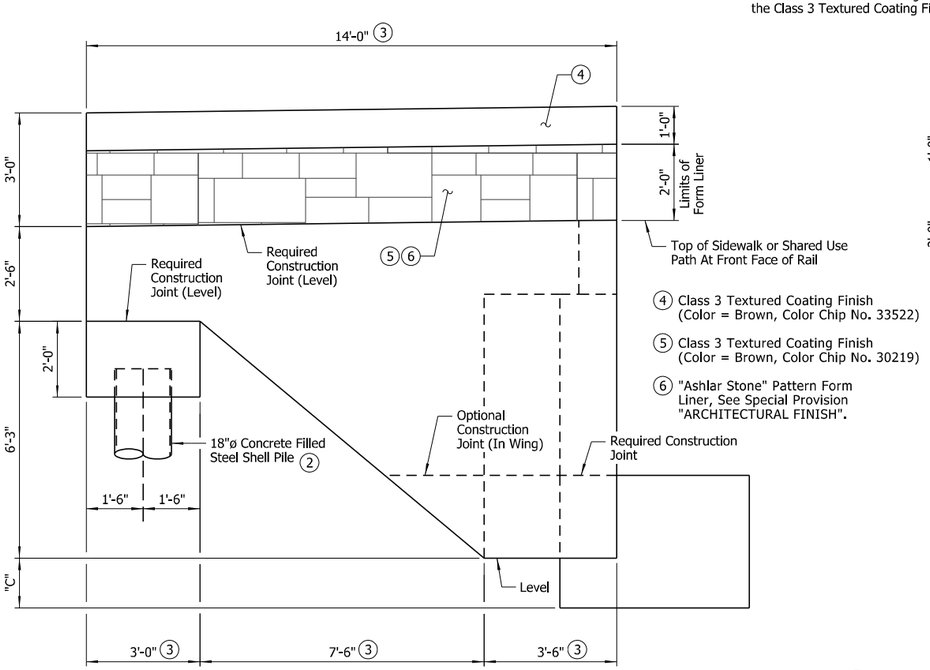

4. Class 3 Textured Coating Finish (Color = Brown, Color Chip No. 33522)
5. Class 3 Textured Coating Finish (Color = Brown, Color Chip No. 30219)
6. "Ashlar Stone" Pattern Form Liner, See Special Provision "ARCHITECTURAL FINISH".

VIEW U-U

No Scale

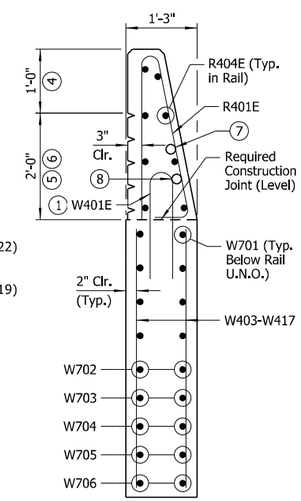

SECTION X-X

Scale: ¾" = 1'-0"

7. Additional 2"ø Sch 40 PVC Conduit
8. 2"ø Sch 40 PVC Conduit for Future Lighting Installation

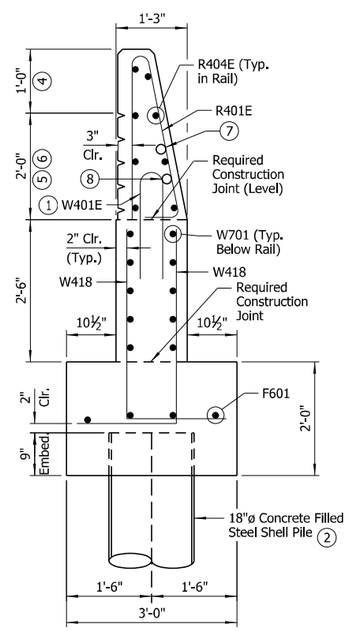

SECTION Y-Y

Scale: ¾" = 1'-0"

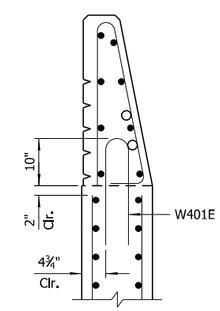

DETAIL A

Scale: ¾" = 1'-0"

TABLE OF VARIABLES				
Bent No.	Location	Elev. "A"	Elev. "B"	"C"
1	Wing A	257.71	257.50	1'-8⅛"
1	Wing B	258.46	258.39	1'-0 13/16"
3	Wing A	257.73	257.64	1'-0½"
3	Wing B	257.51	257.28	1'-7 9/16"

STATE OF ARKANSAS
LICENSED PROFESSIONAL ENGINEER
No.14498
ADAM B. HALL

DIGITALLY SIGNED 6/30/2023
BRIDGE ENGINEER

SHEET 3 OF 5
DETAILS OF END BENTS
HIGHWAY 31 OVER I-40

ROUTE SEC.

ARKANSAS STATE HIGHWAY COMMISSION

LITTLE ROCK, ARK.

DRAWN BY: CWT DATE: DEC. 2022 FILENAME: b061613x1_a3.dgn
CHECKED BY: ABH DATE: DEC. 2022 SCALE: As Shown
DESIGNED BY: CSW DATE: DEC. 2022

BRIDGE NO. 07605 DRAWING NO. 65928

6/29/2023 1:37:04 PM
abhall
WORKSPACE\ARDOT Bridge (2019)
L:\2021\21T01028 - ARDOT 061613 I-40 Strs and Apprs\Drawings\b061613x1_S203_AB.dgn
REVISED DATE:

DATE REVISED	DATE FILMED	DATE REVISED	DATE FILMED	FED. ROAD DIST. NO.	STATE	FED. AID PROJ. NO.	SHEET NO.	TOTAL SHEETS
				6	ARK.			
				JOB NO.		061613	120	215
				07605		END BENTS		65929

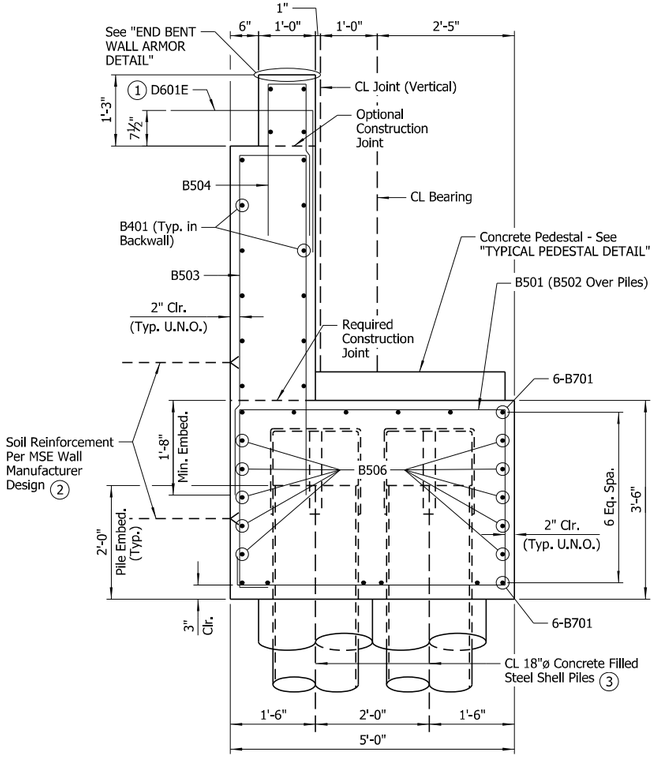

SECTION A-A

Scale: ¾" = 1'-0"

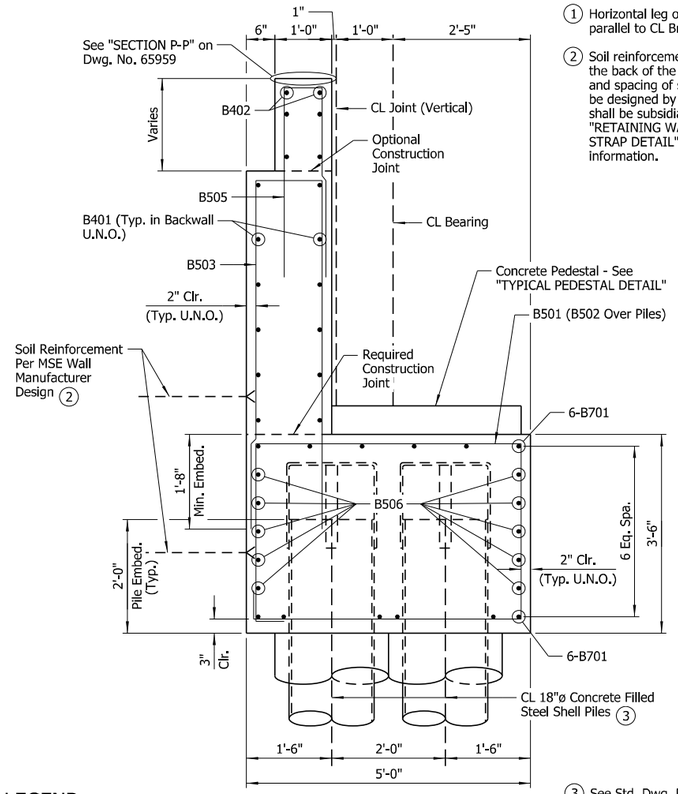

SECTION B-B

Scale: ¾" = 1'-0"

1 Horizontal leg of D601E shall be placed parallel to CL Bridge

2 Soil reinforcement shall be attached at the back of the end bents. Type, size and spacing of soil reinforcement shall be designed by the Contractor. Cost shall be subsidiary to the item "RETAINING WALL". See "END BENT STRAP DETAIL" for additional information.

3 See Std. Dwg. No. 55021 for details of piles and pile anchorage. Pile anchorage shall be placed to minimize interference with anchor bolts and reinforcing in cap.

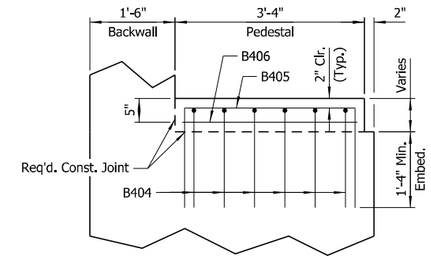

SECTION E-E

Scale: ¾" = 1'-0"

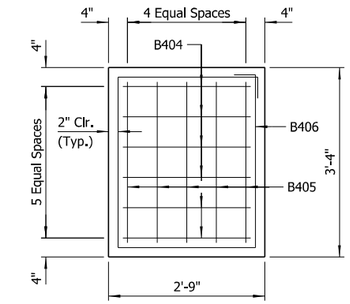

VIEW F-F

Scale: ¾" = 1'-0"

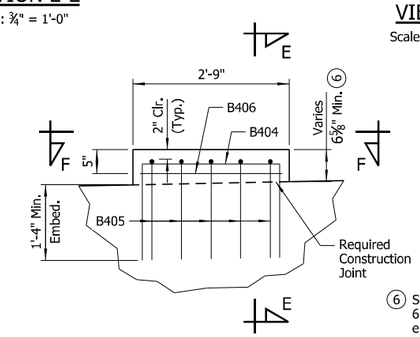

NOTE:
Cap reinforcement not shown for clarity.

6 See Dwg. Nos. 65926 & 65927 for pedestal elevations.

TYPICAL PEDESTAL DETAIL

Scale: ¾" = 1'-0"

LEGEND

U.N.O. = Unless Noted Otherwise
EF = Each Face

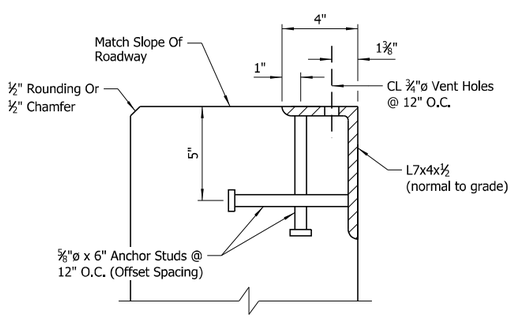

NOTES:
Transverse spacing between vertical anchor studs and vent holes shall be 6".

Concrete shall be hand packed under joint armor.

Special care shall be taken to properly and thoroughly consolidate the concrete in the vicinity of the expansion joint device in the backwall. See Section 802.09(a)(3).

The profile of the backwall angle shall be established based on the vertical curve in conjunction with the skew.

END BENT WALL ARMOR DETAIL

No Scale

MSE wall supplier shall design and furnish attachments for End Bents. This work and materials are considered incidental to the item "RETAINING WALL" and will not be paid for directly.

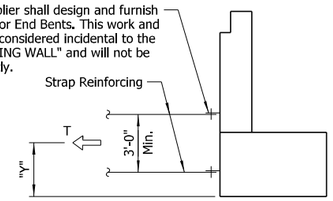

END BENT STRAP DETAIL

No Scale

T = Resultant Force required to be resisted by strap reinforcing

Y = Centroid of Resultant Force

LIMIT STATE	4 T	"Y"
	Kips/Ft.	Ft.
Service	2.7	2.20
Strength	3.8	2.70
Extreme Event	6.5	3.24

4 The provided loads do not include any additional loadings due to heavy construction equipment such as cranes. If the Contractor anticipates bringing heavy construction equipment within 10' of the backwall, they shall coordinate with the MSE wall supplier to design strap reinforcing for the anticipated loadings. Tolerable horizontal backwall movement for all loading combinations is ½" at the Service Limit State. Design computations shall accompany the wall design submittal for review by the Engineer. See Special Provision "RETAINING WALLS" for additional information.

TABLE OF VARIABLES

Girder No.	End Bent No. 1		End Bent No. 3	
	"A"	"B"	"A"	"B"
1	16°36'25"	2 15/16"	16°38'38"	2 15/16"
2	16°33'50"	2 15/16"	16°36'02"	2 15/16"
3	16°31'15"	2 15/16"	16°33'27"	2 15/16"
4	16°28'41"	2 15/16"	16°30'52"	2 15/16"
5	16°26'07"	2⅞"	16°28'18"	2 15/16"
6	16°23'35"	2⅞"	16°25'46"	2⅞"
7	16°21'03"	2⅞"	16°23'14"	2⅞"
8	16°18'32"	2⅞"	16°20'42"	2⅞"

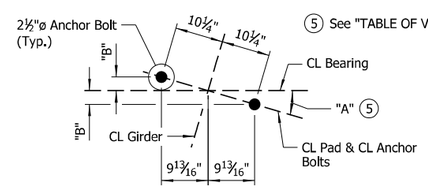

5 See "TABLE OF VARIABLES"

TYPICAL ANCHOR BOLT LAYOUT

No Scale

NOTE:
For "DETAILS OF ELASTOMERIC BEARINGS", see Dwg. No. 65934.

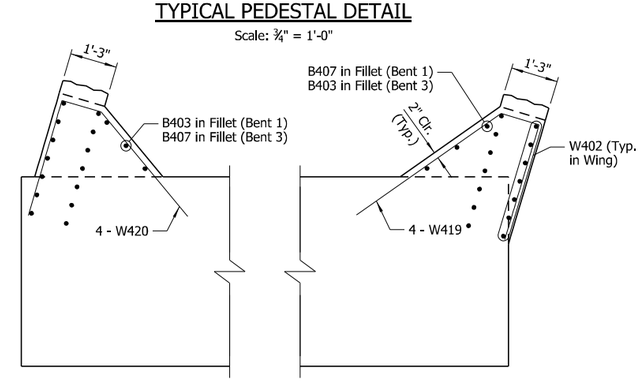

SECTION Z-Z

Scale: ½" = 1'-0"

STATE OF ARKANSAS
LICENSED PROFESSIONAL ENGINEER
No.14498
ADAM B. HALL

DIGITALLY SIGNED 6/30/2023
BRIDGE ENGINEER

SHEET 4 OF 5
DETAILS OF END BENTS
HIGHWAY 31 OVER I-40
ROUTE SEC.
ARKANSAS STATE HIGHWAY COMMISSION
LITTLE ROCK, ARK.

DRAWN BY: CWT DATE: DEC. 2022 FILENAME: b061613x1_a4.dgn
CHECKED BY: ABH DATE: DEC. 2022 SCALE: As Shown
DESIGNED BY: CSW DATE: DEC. 2022
BRIDGE NO. 07605 DRAWING NO. 65929

6/29/2023 1:37:05 PM
abhall
WORKSPACE: ARDOT Bridge (2019)
L:\2021\21T01028 - ARDOT 061613 I-40 Strs and Apprs\Drawings\b061613x1_S204_AB.dgn
REVISED DATE:

DATE REVISED	DATE FILMED	DATE REVISED	DATE FILMED	FED. ROAD DIST. NO.	STATE	FED. AID PROJ. NO.	SHEET NO.	TOTAL SHEETS
				6	ARK.			
				JOB NO.		061613	121	215
				07605		END BENTS		65930

BAR LIST (END BENT NO. 1)

MARK	NO. REQ'D	LENGTH	"A"	"B"	P.D.
B401	16	34'-0"			Str.
B402	2	8'-5"			3"
B403	3	7'-0"			Str.
B404	48	5'-10"	2'-4"	1'-10"	2"
B405	40	6'-5"	2'-11"	1'-10"	2"
B406	8	11'-2"			2"
B407	3	6'-7"			Str.
B501	104	16'-0"			2½"
B502	36	10'-8"	4'-8"	3'-1"	2½"
B503	126	14'-6"	1'-2"	6'-9"	2½"
B504	113	5'-10"	8"	2'-8"	2½"
B505	13	7'-4"	8"	3'-5"	2½"
B506	20	34'-2"			Str.
B601	9	9'-2"			4½"
B602	9	7'-7"			4½"
B701	24	35'-6"			5¼"
D601E	57	4'-10"	2'-6"	2'-6"	4½"
F601	8	2'-8"			Str.
R401E	56	6'-4"			2½", 3"
R404E	16	13'-8"			Str.
W401E	56	3'-11"			3¾"
W402	28	8'-5"			Str.
W403 To W417	4 Ea.	8'-2" To 2'-4"			Str.
W418	24	5'-1"	3'-5"	1'-9"	3"
W419	4	8'-9"	4'-8"	15¼	3"
W420	4	7'-8"	3'-7"	8	3"
W701	20	13'-8"			Str.
W702 To W712	4 Ea.	10'-3" To 4'-3"			Str.
W713	4	13'-10"			5¼"

BAR LIST (END BENT NO. 3)

MARK	NO. REQ'D	LENGTH	"A"	"B"	P.D.
B401	16	34'-0"			Str.
B402	2	8'-5"			3"
B403	3	7'-0"			Str.
B404	48	5'-10"	2'-4"	1'-10"	2"
B405	40	6'-5"	2'-11"	1'-10"	2"
B406	8	11'-2"			2"
B407	3	6'-7"			Str.
B501	104	16'-0"			2½"
B502	36	10'-8"	4'-8"	3'-1"	2½"
B503	126	14'-6"	1'-2"	6'-9"	2½"
B504	113	5'-10"	8"	2'-8"	2½"
B505	13	7'-4"	8"	3'-5"	2½"
B506	20	34'-2"			Str.
B601	9	9'-2"			4½"
B602	9	7'-7"			4½"
B701	24	35'-6"			5¼"
D601E	57	4'-10"	2'-6"	2'-6"	4½"
F601	8	2'-8"			Str.
R401E	56	6'-4"			2½", 3"
R404E	16	13'-8"			Str.
W401E	56	3'-11"			3¾"
W402	28	8'-5"			Str.
W403 To W417	4 Ea.	8'-2" To 2'-4"			Str.
W418	24	5'-1"	3'-5"	1'-9"	3"
W419	4	8'-9"	4'-8"	15¼	3"
W420	4	7'-8"	3'-7"	8	3"
W701	20	13'-8"			Str.
W702 To W712	4 Ea.	10'-3" To 4'-3"			Str.
W713	4	13'-10"			5¼"

NOTES:
Dimensions of bars are out-to-out.

Bars designated with "E" suffix shall be epoxy coated.

For bar bending diagrams of R401E & W401E, see Std. Dwg. No. 55070.

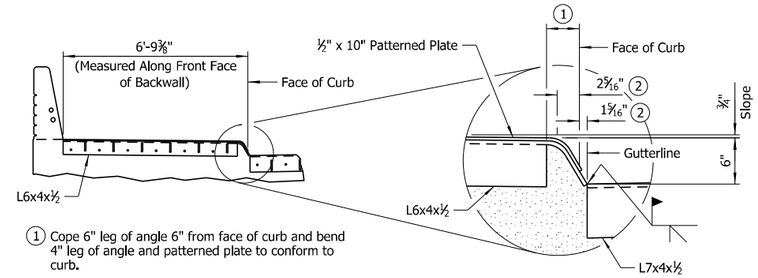

SIDEWALK AND CURB DETAIL

No Scale

NOTE:
See Dwg. No. 65959 for additional details.

GENERAL NOTES

Finish top of backwall to match the bridge deck.

Structural steel in end bents shall be ASTM A709, Gr. 50 and shall be paid for as "STRUCTURAL STEEL IN PLATE GIRDER SPANS (A709, GR. 50)".

See Standard Drawing No. 55006 for additional notes.

For additional information, see Layout.

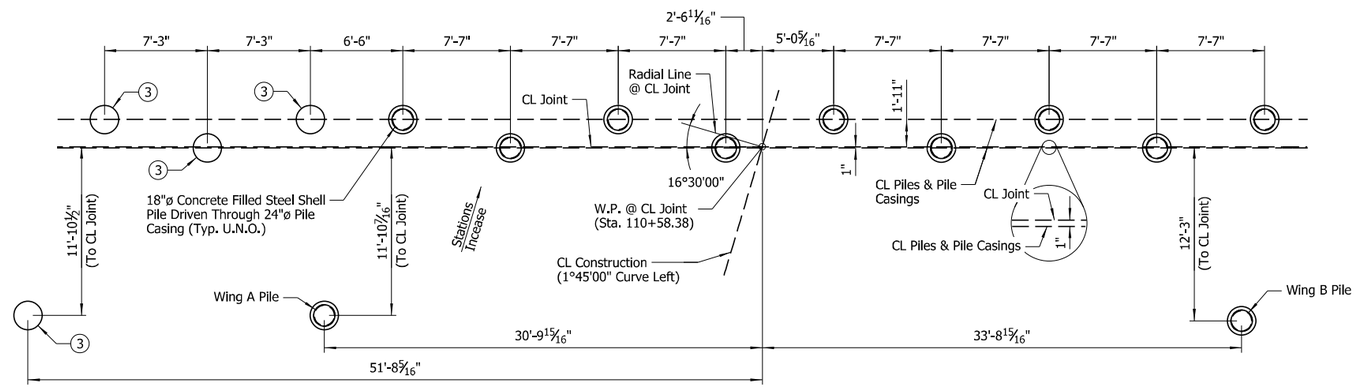

FOUNDATION PLAN - END BENT NO. 1

Scale: ¼" = 1'-0"

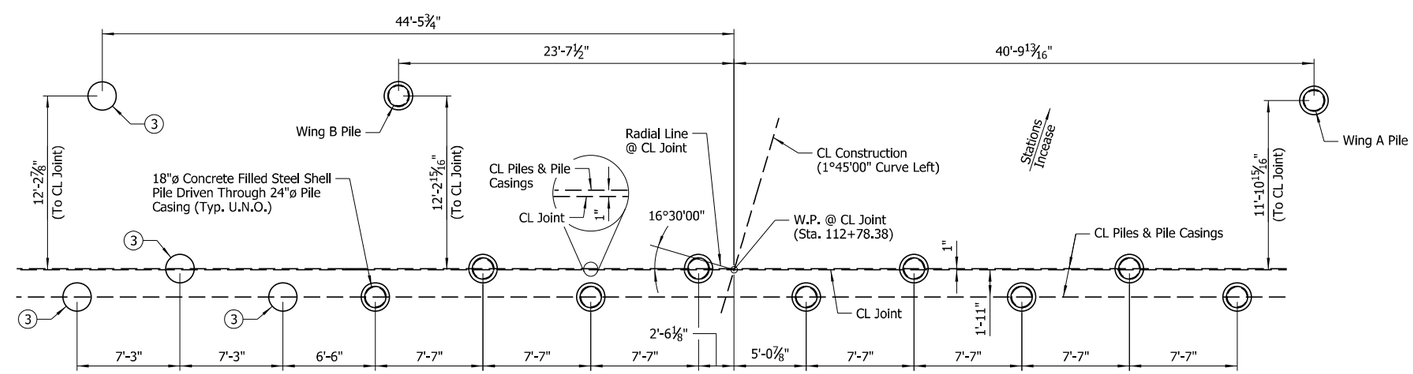

FOUNDATION PLAN - END BENT NO. 3

Scale: ¼" = 1'-0"

(3) 24"ø Pile Casing for Future Widening

NOTE:
See Layout General Notes for additional information on casing installation and pile driving.

BAR BENDING DIAGRAMS

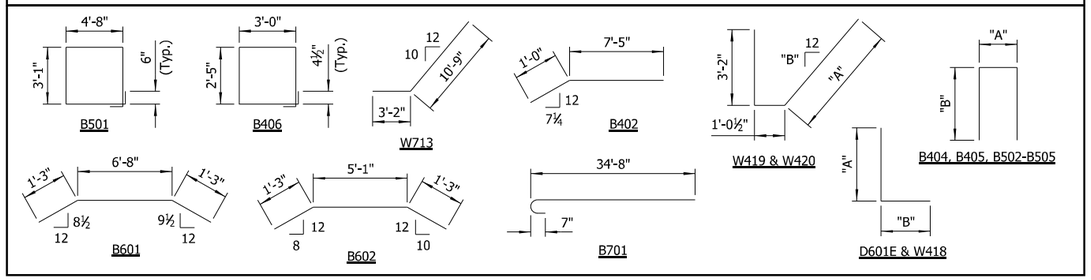

LEGEND

EF = Each Face

STATE OF ARKANSAS
LICENSED PROFESSIONAL ENGINEER
No.14498
ADAM B. HALL

DIGITALLY SIGNED 6/30/2023
BRIDGE ENGINEER

SHEET 5 OF 5
DETAILS OF END BENTS
HIGHWAY 31 OVER I-40

ROUTE SEC.

ARKANSAS STATE HIGHWAY COMMISSION

LITTLE ROCK, ARK.

DRAWN BY:	CWT	DATE:	DEC. 2022	FILENAME:	b061613x1_a5.dgn
CHECKED BY:	ABH	DATE:	DEC. 2022	SCALE:	As Shown
DESIGNED BY:	CSW	DATE:	DEC. 2022		

BRIDGE NO. 07605 DRAWING NO. 65930

abhall 6/29/2023 1:37:06 PM
WORKSPACE\ARDOT Bridge (2019)
L:\2021\21T01028 - ARDOT 061613 I-40 Strs and Apprs\Drawings\b061613x1_S205_AB.dgn
REVISED DATE:

DATE REVISED	DATE FILMED	DATE REVISED	DATE FILMED	FED. ROAD DIST. NO.	STATE	FED. AID PROJ. NO.	SHEET NO.	TOTAL SHEETS
				6	ARK.			
				JOB NO.		061613	122	215
				07605		INT. BENT		65931

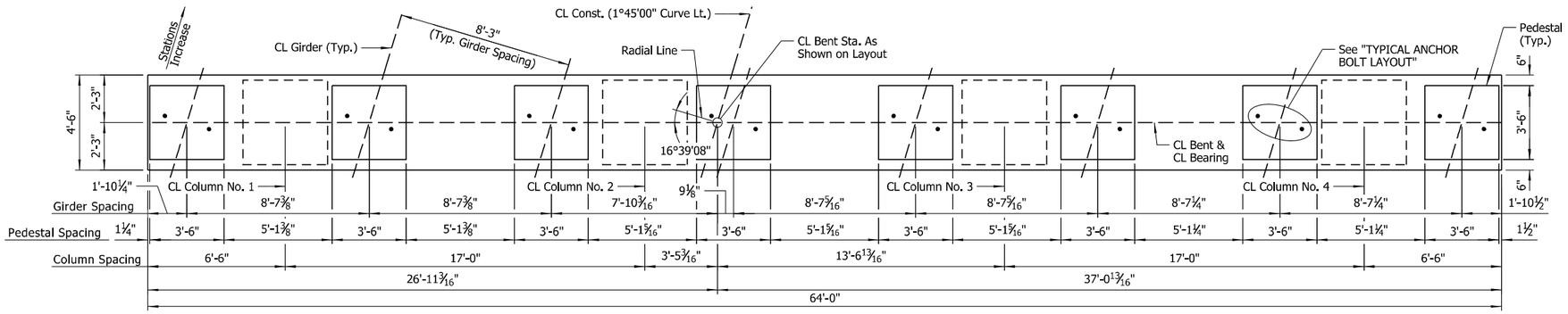

PLAN

(Footing And Crashwall Not Shown For Clarity)
Scale: ⁵⁄₁₆" = 1'-0"

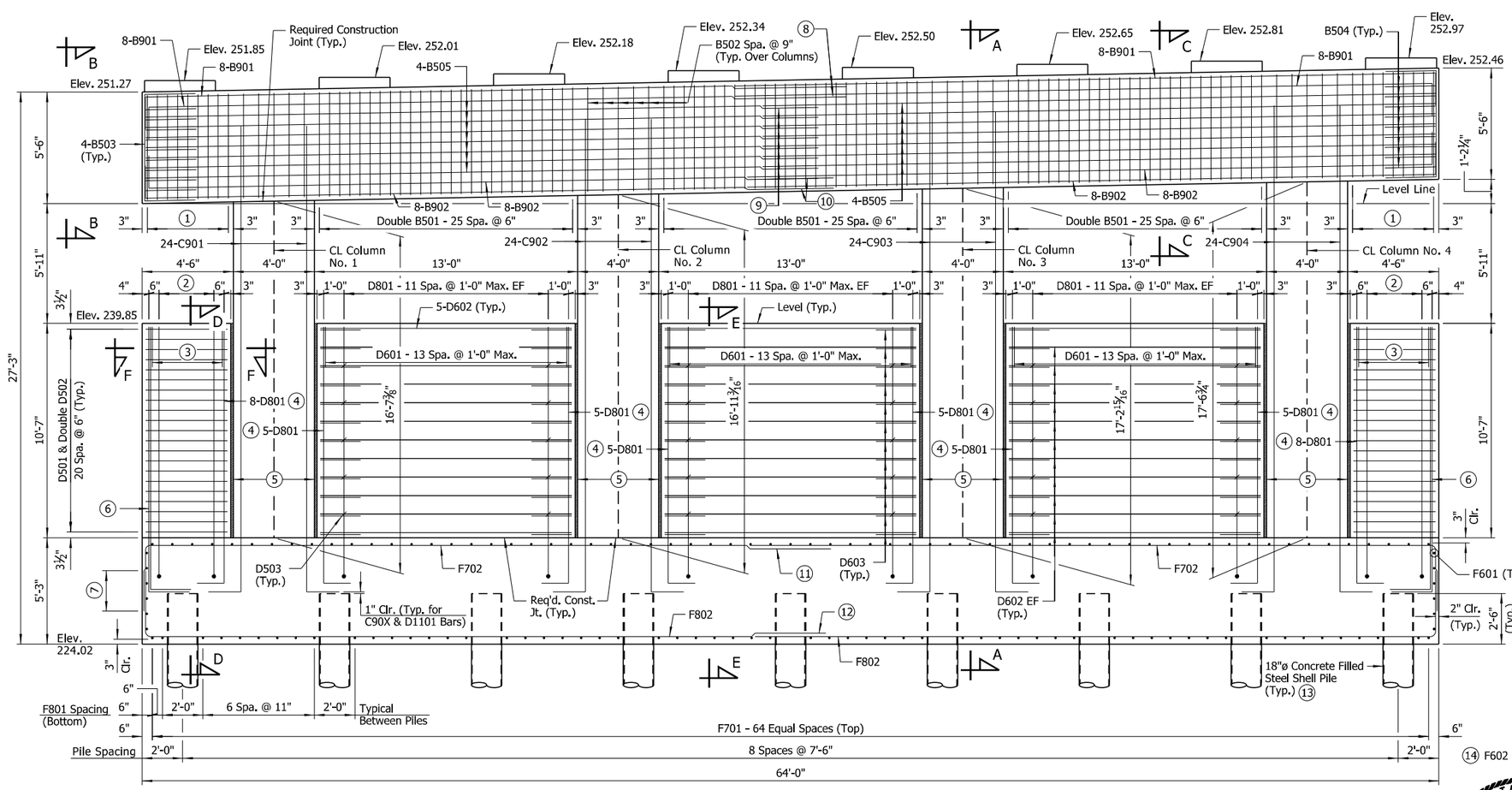

ELEVATION

(Looking Ahead)
Scale: ⁵⁄₁₆" = 1'-0"

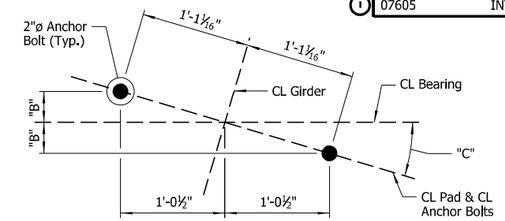

TYPICAL ANCHOR BOLT LAYOUT

No Scale

NOTE:
For "DETAILS OF ELASTOMERIC BEARINGS", see Dwg. No. 65934.

TABLE OF VARIABLES		
Girder No.	"B"	"C"
1	3¾"	16°46'44"
2	3¾"	16°44'07"
3	3¾"	16°41'30"
4	3¾"	16°38'54"
5	3¾"	16°36'19"
6	3¾"	16°33'45"
7	3¹¹⁄₁₆"	16°31'12"
8	3¹¹⁄₁₆"	16°28'39"

NOTE:
Other cap reinforcement not shown for clarity.

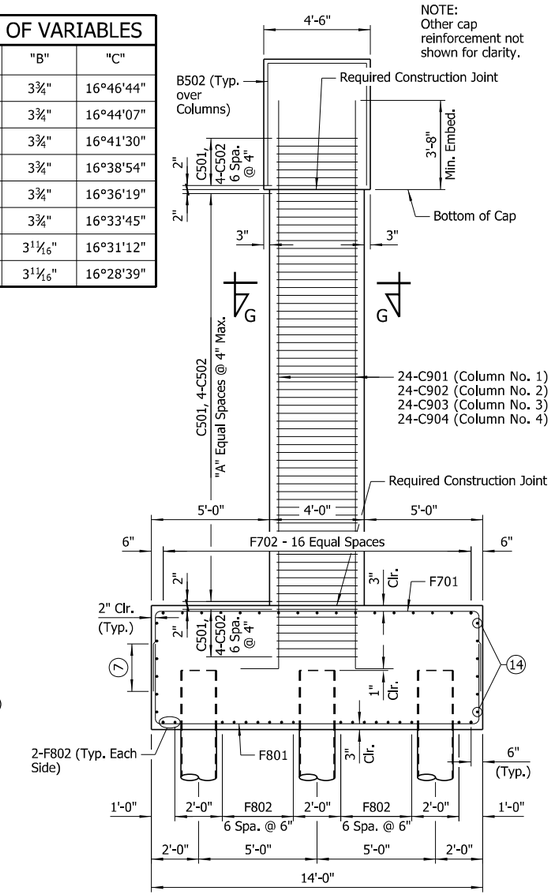

SECTION A-A

Scale: ⁵⁄₁₆" = 1'-0"

1. Double B501 - 8 Spaces @ 6"
2. D801 - 6 Spaces @ 6" Max. EF
3. D601 - 4 Spaces @ 1'-0" Max.
4. Mechanical couplers may be substituted to facilitate column construction. See "OPTIONAL MECHANICAL COUPLER DETAIL" on Dwg. No. 65932 for requirements.
5. 1½" polystyrene foam board between crashwall and columns
6. 8-D1101 Bundled with 8-D1102, see "SECTION F-F" on Dwg. No. 65932.
7. 2'-0" Min. Lap Splice (Typ.)
8. 5'-6" Min. Lap Splice for Bars B901
9. 2'-9" Min. Lap Splice for Bars B505
10. 4'-3" Min. Lap Splice for Bars B902
11. 4'-0" Min. Lap Splice for Bars F702
12. 3'-6" Min. Lap Splice for Bars F802
13. "ALTERNATE PILE ANCHORAGE DETAIL" on Std. Dwg. No. 55021 required to minimize interference with reinforcing in footing
14. F602 Lapped w/ F602 (Typ. On Side) (3'-4" Min. Lap)

NOTES:
For General Notes, see Std. Dwg. No. 55006.

For additional information, see Layout.

For "VIEW B-B", Sections C-C thru G-G and pedestal details, see Dwg. No. 65932.

For "BAR LIST", "BAR BENDING DIAGRAMS", "FOOTING PLAN" and aesthetic details, see Dwg. No. 65933.

TABLE OF VARIABLES	
Column No.	"A"
1	49
2	50
3	51
4	52

LEGEND
EF = Each Face

14 F602 Lapped w/ F602 (Typ. On Side) (3'-4" Min. Lap)

STATE OF ARKANSAS
LICENSED PROFESSIONAL ENGINEER
No.14498
ADAM B. HALL
DIGITALLY SIGNED 6/30/2023
BRIDGE ENGINEER

SHEET 1 OF 3
DETAILS OF INTERMEDIATE BENT
HIGHWAY 31 OVER I-40
ROUTE SEC.
ARKANSAS STATE HIGHWAY COMMISSION
LITTLE ROCK, ARK.

DRAWN BY: CWT DATE: APR. 2022 FILENAME: b061613x1_b1.dgn
CHECKED BY: ABH DATE: NOV. 2022 SCALE: As Shown
DESIGNED BY: JJB DATE: APR. 2022
BRIDGE NO. 07605 DRAWING NO. 65931

abhall 6/29/2023 1:37:08 PM
WORKSPACE\ARDOT Bridge (2019)
L:\2021\21T01028 - ARDOT 061613 I-40 Strs and Apprs\Drawings\b061613x1_S206_BE.dgn
REVISED DATE:

DATE REVISED	DATE FILMED	DATE REVISED	DATE FILMED	FED. ROAD DIST. NO.	STATE	FED. AID PROJ. NO.	SHEET NO.	TOTAL SHEETS
				6	ARK.			
				JOB NO.		061613	123	215
				1 07605		INT. BENT		65932

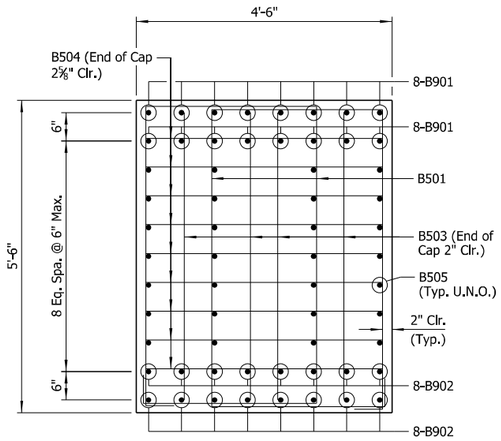

VIEW B-B

Scale: ¾" = 1'-0"

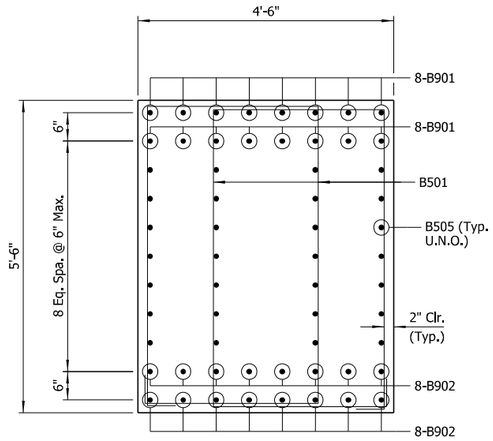

SECTION C-C

Scale: ¾" = 1'-0"

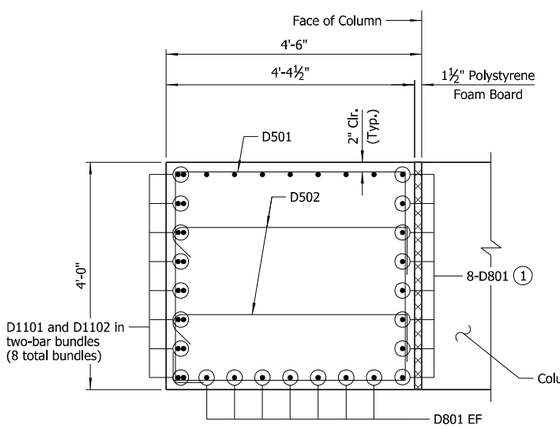

SECTION F-F

Scale: ¾" = 1'-0"

1 Mechnical couplers may be substituted to facilitate column construction. See "OPTIONAL MECHANICAL COUPLER DETAIL"

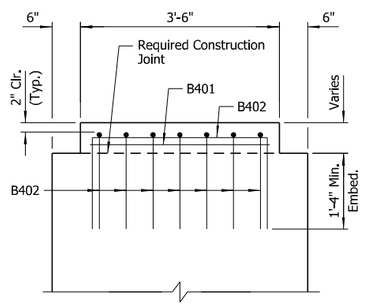

SECTION H-H

Scale: ¾" = 1'-0"

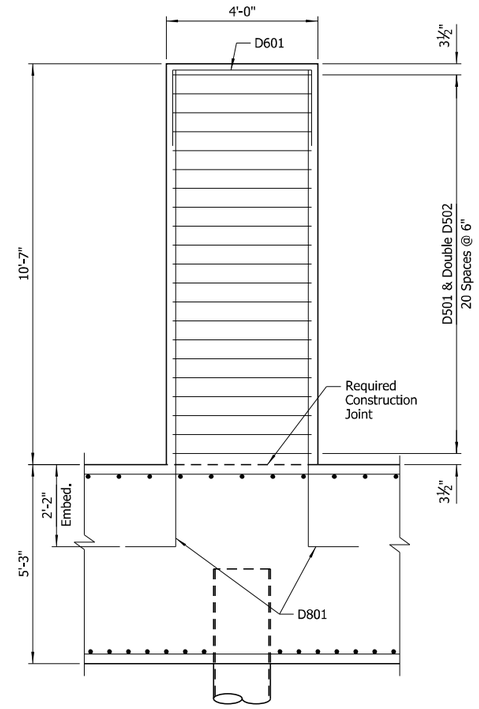

SECTION D-D

Scale: ½" = 1'-0"

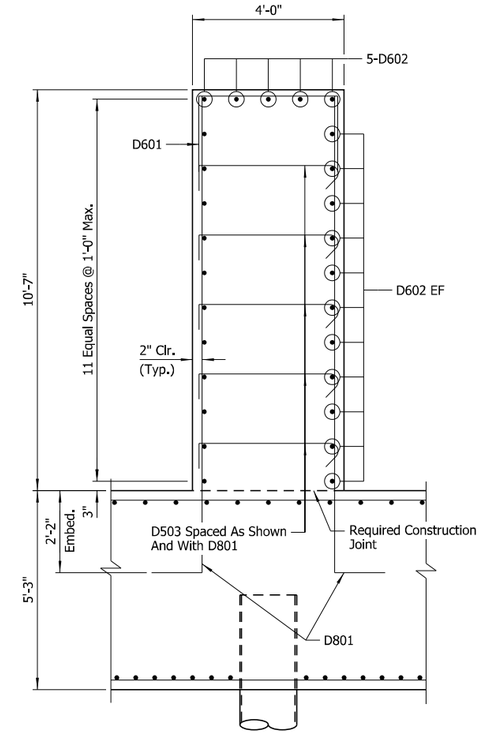

SECTION E-E

Scale: ½" = 1'-0"

LEGEND

U.N.O. = Unless Noted Otherwise
EF = Each Face

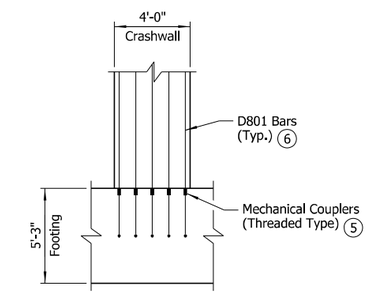

OPTIONAL MECHANICAL COUPLER DETAIL

No Scale

NOTE:
Mechanical couplers are optional for D801 bars near columns as shown on Dwg. No. 65930 and on "SECTION F-F". Bar designations and bar list do not account for the use mechanical couplers.

5 The Mechanical Couplers shall be an approved type in accordance with the ARDOT Qualified Products List (QPL).

The cost of Mechanical Couplers shall not be measured separately but shall be considered subsidiary to the item "REINFORCING STEEL-BRIDGE (GRADE 60)".

Mechanical couplers shall develop at least 125% of the specified yield strength of the reinforcing steel.

6 One end of bar shall be threaded to match Mechanical Coupler.

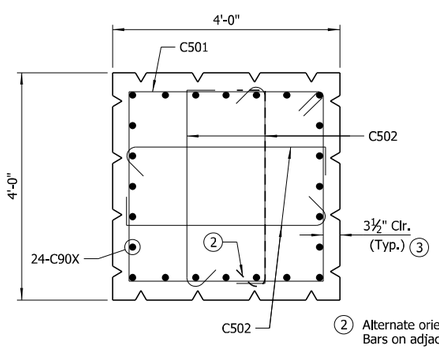

SECTION G-G

(Column Section Above Crashwall Shown)
Scale: ¾" = 1'-0"

2 Alternate orientation of hooks on C502 Bars on adjacent horizontal rows.

3 Form liner shall be a maximum depth of 1½" to provide a minimum clear cover of 2". Form liner shall not be used below top of crashwall.

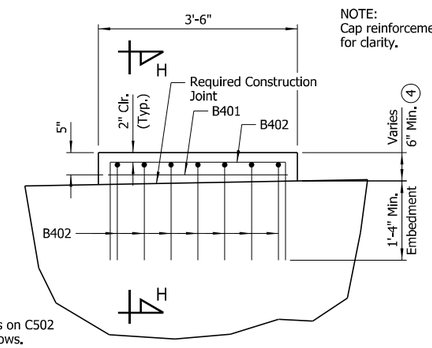

NOTE:
Cap reinforcement not shown for clarity.

ELEVATION OF PEDESTAL

(Looking Ahead)
Scale: ¾" = 1'-0"

4 See Dwg. No. 65930 for pedestal elevations.

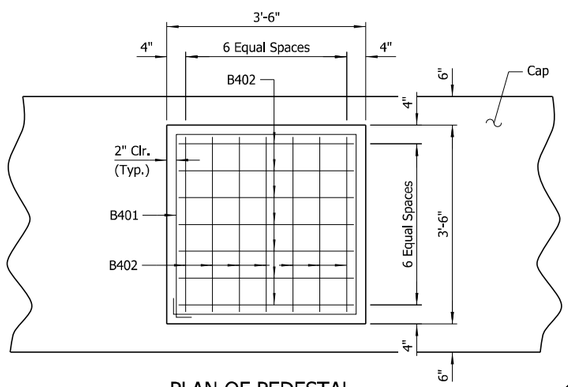

PLAN OF PEDESTAL

Scale: ¾" = 1'-0"

STATE OF ARKANSAS
LICENSED PROFESSIONAL ENGINEER
No.14498
ADAM B. HALL

DIGITALLY SIGNED 6/30/2023
BRIDGE ENGINEER

SHEET 2 OF 3
DETAILS OF INTERMEDIATE BENT
HIGHWAY 31 OVER I-40

ROUTE SEC.

ARKANSAS STATE HIGHWAY COMMISSION

LITTLE ROCK, ARK.

DRAWN BY:	CWT	DATE:	APR. 2022	FILENAME:	b061613x1_b2.dgn
CHECKED BY:	ABH	DATE:	NOV. 2022	SCALE:	As Shown
DESIGNED BY:	JJB	DATE:	APR. 2022		

BRIDGE NO. 07605 DRAWING NO. 65932

abhall 6/29/2023 1:37:09 PM
WORKSPACE:ARDOT Bridge (2019)
L:\2021\21T01028 - ARDOT 061613 I-40 Strs and Apprs\Drawings\b061613x1_S207_BE.dgn
REVISED DATE:

DATE REVISED	DATE FILMED	DATE REVISED	DATE FILMED

FED. ROAD DIST. NO.	STATE	FED. AID PROJ. NO.	SHEET NO.	TOTAL SHEETS
6	ARK.			
JOB NO.		061613	124	215
07605		INT. BENT		65933

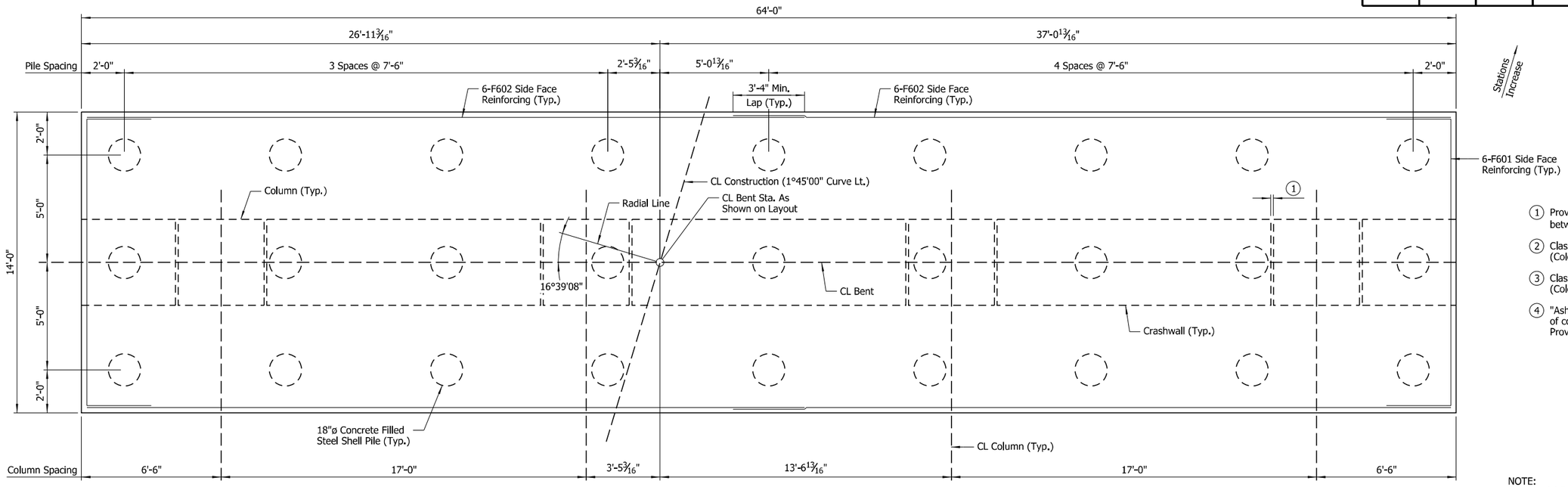

FOOTING PLAN

Scale: 3/8" = 1'-0"

1. Provide 1½" Polystyrene Foam Board between Column Face and Crashwall (Typ.)
2. Class 3 Textured Coating Finish (Color = Brown, Color Chip No. 33522)
3. Class 3 Textured Coating Finish (Color = Brown, Color Chip No. 30219)
4. "Ashlar Stone" pattern form liner (full-height of column - exposed faces only), see Special Provision "ARCHITECTURAL FINISH".

NOTE:
See Special Provision "TEXTURED COATING FINISH" for additional information regarding the placement of the Class 3 Textured Coating Finish.

BAR LIST

MARK	NO. REQ'D	LENGTH	"A"	"B"	P.D.
B401	8	13'-0"			2"
B402	112	6'-11"	3'-1"	2'-0"	2"
B501	192	17'-0"	3'-1"	5'-2"	2½"
B502	20	14'-4"	4'-2"	5'-2"	2½"
B503	8	9'-10"	5'-0"	2'-6"	2½"
B504	18	8'-10"	4'-0"	2'-6"	2½"
B505	56	33'-3"			Str.
B901	32	35'-11"	34'-7"	1'-7¼"	9"
B902	32	35'-4"	34'-0"	1'-7¼"	9"
C501	262	14'-4"			2½"
C502	1048	4'-7½"	3'-5"		2½"
C901	24	24'-4"	23'-0"	1'-7¼"	9"
C902	24	24'-8"	23'-4"	1'-7¼"	9"
C903	24	25'-0"	23'-8"	1'-7¼"	9"
C904	24	25'-4"	24'-0"	1'-7¼"	9"

BAR LIST

MARK	NO. REQ'D	LENGTH	"A"	"B"	P.D.
D501	42	15'-11"	4'-0½"	3'-8"	2½"
D502	84	5'-3"	4'-0½"		2½"
D503	180	4'-10½"	3'-8"		2½"
D601	52	7'-4½"	3'-8"	2'-0"	4½"
D602	81	12'-5"			Str.
D603	72	7'-2½"	3'-6"	2'-0"	4½"
D801	146	13'-8½"	12'-7"	1'-4"	6"
D1101	16	14'-9"	13'-1"	2'-0"	11¼"
D1102	16	14'-7"	12'-11"	2'-0"	11¼"
F601	12	19'-2½"	13'-6"	3'-0"	4½"
F602	24	33'-5"			Str.
F701	65	20'-2"	13'-8"	3'-5"	5¼"
F702	34	37'-1"	33'-10"	3'-5"	5¼"
F801	60	20'-1"	13'-8"	3'-5"	6"
F802	36	36'-10"	33'-7"	3'-5"	6"

BAR BENDING DIAGRAMS

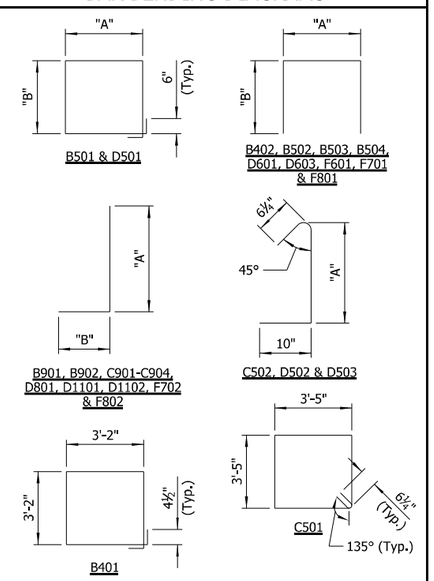

NOTE:
Dimensions of bars are out-to-out.

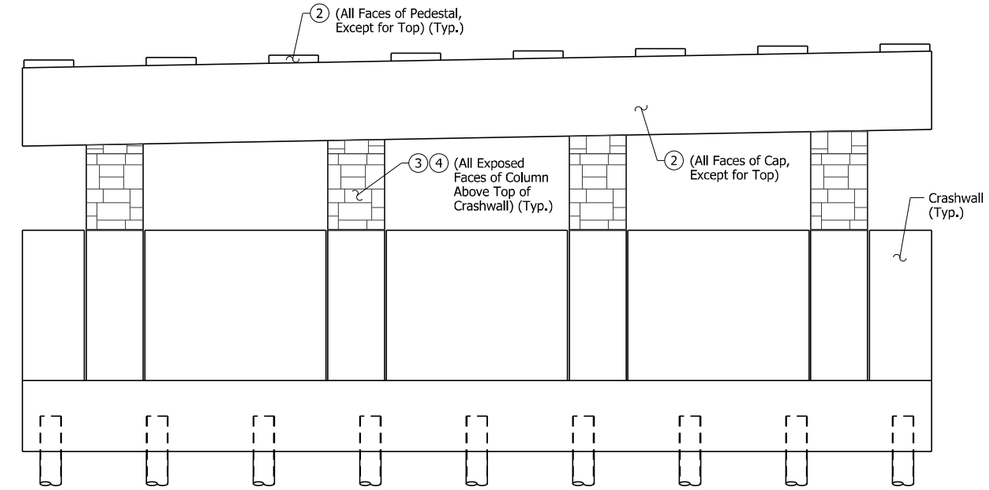

ELEVATION - BENT AESTHETICS

No Scale

STATE OF ARKANSAS
LICENSED PROFESSIONAL ENGINEER
No.14498
ADAM B. HALL

DIGITALLY SIGNED 6/30/2023
BRIDGE ENGINEER

SHEET 3 OF 3
DETAILS OF INTERMEDIATE BENT
HIGHWAY 31 OVER I-40

ROUTE SEC.

ARKANSAS STATE HIGHWAY COMMISSION

LITTLE ROCK, ARK.

DRAWN BY:	CWT	DATE:	APR. 2022	FILENAME:	b061613x1_b3.dgn
CHECKED BY:	ABH	DATE:	NOV. 2022	SCALE:	As Shown
DESIGNED BY:	JJB	DATE:	APR. 2022		

BRIDGE NO. 07605 DRAWING NO. 65933

6/29/2023 1:37:10 PM
abhall
WORKSPACE\ARDOT Bridge (2019)
L:\2021\21T01028 - ARDOT 061613 I-40 Strs and Apprs\Drawings\b061613x1_S208_BE.dgn
REVISED DATE:

DATE REVISED	DATE FILMED	DATE REVISED	DATE FILMED	FED. ROAD DIST. NO.	STATE	FED. AID PROJ. NO.	SHEET NO.	TOTAL SHEETS
				6	ARK.			
				JOB NO.		061613	125	215
				(1) 07605		ELASTOMERIC BEARINGS		65934

TABLE OF FABRICATOR VARIABLES

Location		Bearing Type	No. Of Bearings Each Bent	(3) Maximum Design Load (Kips)	G	H	Elastomeric Pad							External Load Plate									Anchor Bolt				
							A	B	N	t_i	t_e	No. & Thickness Of Steel Laminae	T	C	D	E	F	J	K	M	T_a	T_b	Anchor Bolt		Pipe Sleeve Size (Dia. x L)	Sheet Metal Sleeve Size (Dia. x L)	Steel Washer Size (O.D.)
Bent No.	Girder No.																						(Dia. x L)	Grade			
1	All	Exp.	8	129	8 11/16"	4 15/16"	14"	10"	4	½"	¼"	5 @ 12 Ga.	3"	11"	27½"	5½"	3¾"	-	½"	10¼"	2.07"	1.93"	2.5" x 37"	55	3" x 5 3/16"	4" x 12"	4½"
2	All	Fixed	8	340	8 3/16"	4 15/16"	16"	14"	4	½"	¼"	5 @ 12 Ga.	3"	15"	35¼"	3⅛"	3⅛"	2 7/16"	½"	13 11/16"	1.99"	2.01"	2" x 33"	55	2½" x 5 3/16"	4" x 18"	3¾"
3	All	Exp.	8	129	8 11/16"	4 15/16"	14"	10"	4	½"	¼"	5 @ 12 Ga.	3"	11"	27½"	5½"	3¾"	-	½"	10¼"	1.91"	2.09"	2.5" x 37"	55	3" x 5 3/16"	4" x 12"	4½"

(1) Care shall be taken to ensure that the external load plate is in full and complete contact with the girder flange before welding begins.

Unless otherwise approved by the Engineer, welding of the external load plate at expansion bearings to the girder will be allowed only when: 1) the approximate average air temperature during the 24 hour period immediately preceding welding is between 40°F and 80°F; and 2) the slots in the external load plate are positioned to center on the anchor bolts; and 3) no horizontal deformation of the elastomeric pad is evident. If welding at other temperatures is required, the Engineer will provide adjustment data.

(2) Centerline Elastomeric Pad shall be aligned with CL Girder.

(3) Maximum Design Load = LRFD Service I Limit State

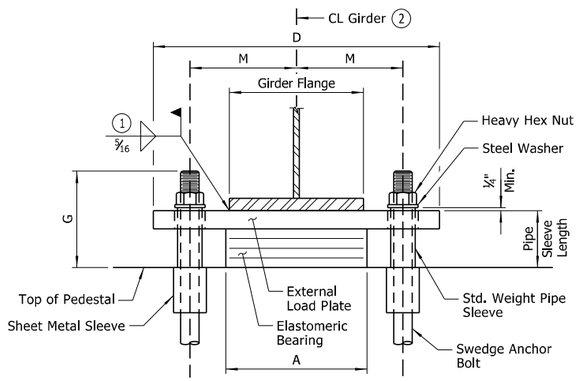

FRONT VIEW - AT BENT NOS. 1 & 3

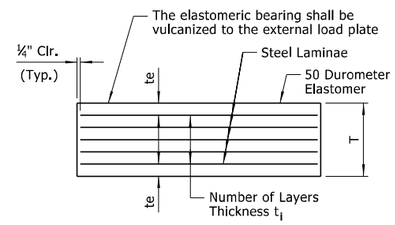

t_e = Thickness of elastomer cover on top and bottom of pad
t_i = Thickness of elastomer between steel laminae
N = Number of elastomer layers of thickness t_i

ELASTOMERIC BEARING

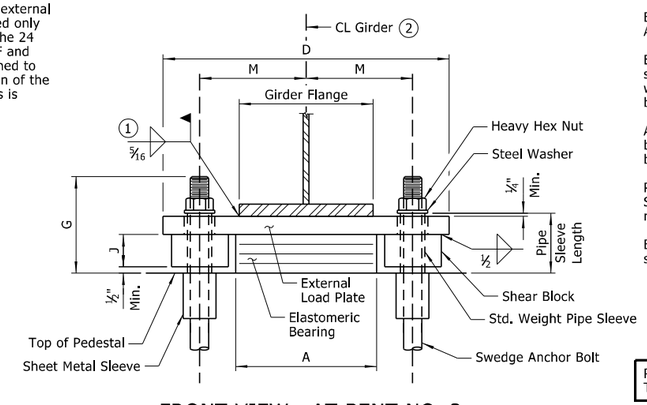

FRONT VIEW - AT BENT NO. 2

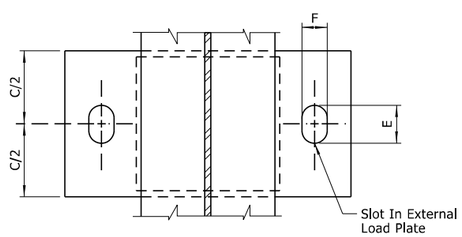

PLAN VIEW - AT BENT NOS. 1 & 3

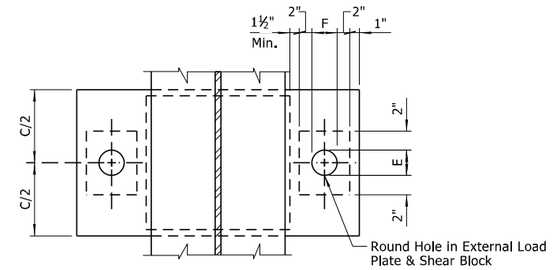

PLAN VIEW - AT BENT NO. 2

NOTE:
The direction of the bevel of the external load plate may not be accurately depicted with respect to Ta and Tb values shown in "TABLE OF FABRICATOR VARIABLES".

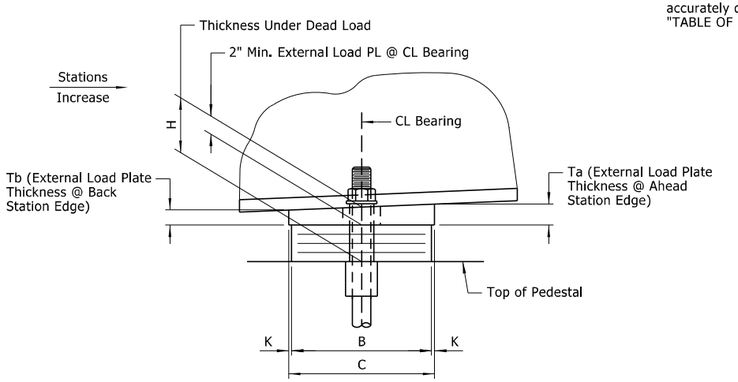

SIDE VIEW - AT BENT NOS. 1 & 3

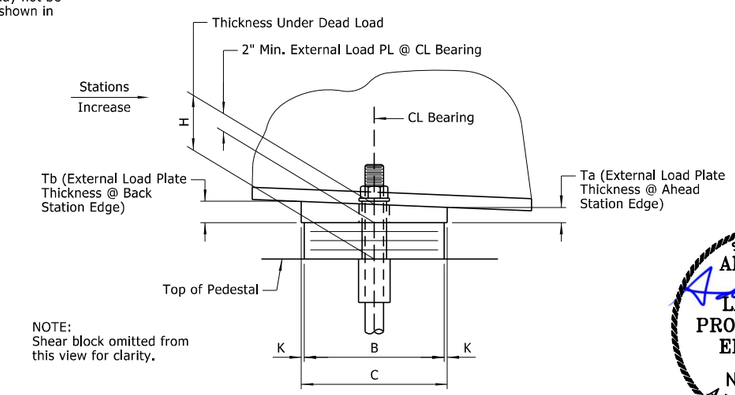

NOTE:
Shear block omitted from this view for clarity.

SIDE VIEW - AT BENT NO. 2

GENERAL NOTES

Elastomeric bearings shall conform to Section 808 and shall be paid for at the unit price bid for "ELASTOMERIC BEARINGS."

External load plates and shear blocks shall conform to ASTM A709, Grade 50. Pipe sleeves shall be ASTM A500, Grade B, and shall be galvanized to conform to AASHTO M 232, Class C or ASTM B695, Class 50.

External load plates and shear blocks shall be completely fabricated (including bevel, bolt holes and all shop welding) and shall be cleaned before vulcanizing to the elastomeric bearing. The surfaces in contact with the elastomeric bearing shall be cleaned in accordance with Subsection 808.03. Other surfaces shall be blast cleaned in accordance with Subsection 807.84(b) for painted steel.

Anchor bolts, washers and nuts shall conform to Subsection 807.07. The anchor bolt grade of steel shall be as specified in the "TABLE OF FABRICATOR VARIABLES". Indentations shall be circular with rounded bottoms and staggered as shown in the details.

Pipe sleeves, anchor bolts, washers and nuts shall be paid for at the unit price bid for "STRUCTURAL STEEL IN PLATE GIRDER SPANS (A709, GR. 50)". External load plates and shear blocks will not be measured or paid for separately but will be included in the unit price bid for "ELASTOMERIC BEARINGS".

Bearings shall be seated in accordance with Subsection 808.08. This work and materials are considered subsidiary to the item "ELASTOMERIC BEARINGS" and will not be paid for directly.

Prior to erection of the girders, the Contractor shall verify the orientation of the bearings with respect to T_a and T_b.

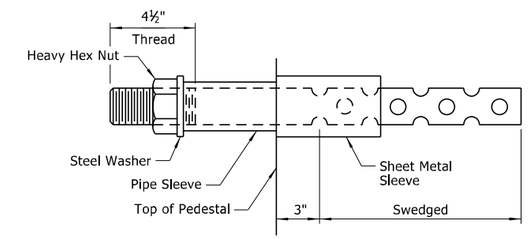

ANCHOR BOLT DETAIL

NOTE:
Anchor bolts may be cast in place or drilled and grouted into place. If anchor bolts are to be cast in place, the galvanized sheet metal sleeves will not be required.

If anchor bolts are to be drilled and grouted in place, the galvanized sheet metal sleeves shall be cast in place as shown. Sleeves shall be dry packed with styrofoam, urethane foam or approved equal prior to pouring of concrete. After pouring of the cap and prior to erection of structural steel, the dry pack shall be removed and holes for the anchor bolts shall be accurately drilled into the concrete. Bolts placed in drilled holes shall be accurately set and fixed using a QPL-approved epoxy or non-shrink grout that completely fills the holes. Galvanized Sheet Metal Sleeves shall meet the requirements of ASTM A653, CS Type B or approved equivalent, be of minimum 16 gage thickness, and be galvanized according to ASTM B695, Class 50. Sheet Metal Sleeves will not be paid for directly, but will be considered subsidiary to the item "STRUCTURAL STEEL IN PLATE GIRDER SPANS (A709, GR. 50)".

STATE OF ARKANSAS
LICENSED PROFESSIONAL ENGINEER
No.14498
ADAM B. HALL

DIGITALLY SIGNED 6/30/2023
BRIDGE ENGINEER

DETAILS OF ELASTOMERIC BEARINGS
HIGHWAY 31 OVER I-40
ROUTE SEC.
ARKANSAS STATE HIGHWAY COMMISSION
LITTLE ROCK, ARK.

DRAWN BY:	CWT	DATE:	MAR. 2022	FILENAME:	b061613x1_e1.dgn
CHECKED BY:	ABH	DATE:	NOV. 2022	SCALE:	As Shown
DESIGNED BY:	RAK	DATE:	MAR. 2022		

BRIDGE NO. 07605 DRAWING NO. 65934

abhall 6/29/2023 1:37:11 PM
WORKSPACE:ARDOT Bridge (2019)
L:\2021\21T01028 - ARDOT 061613 I-40 Strs and Apprs\Drawings\b061613x1_S301_BG.dgn
REVISED DATE:

DATE REVISED	DATE FILMED	DATE REVISED	DATE FILMED	FED. ROAD DIST. NO.	STATE	FED. AID PROJ. NO.	SHEET NO.	TOTAL SHEETS
				6	ARK.			
				JOB NO.		061613	126	215
				(I) 07605		220'-0" UNIT		65935

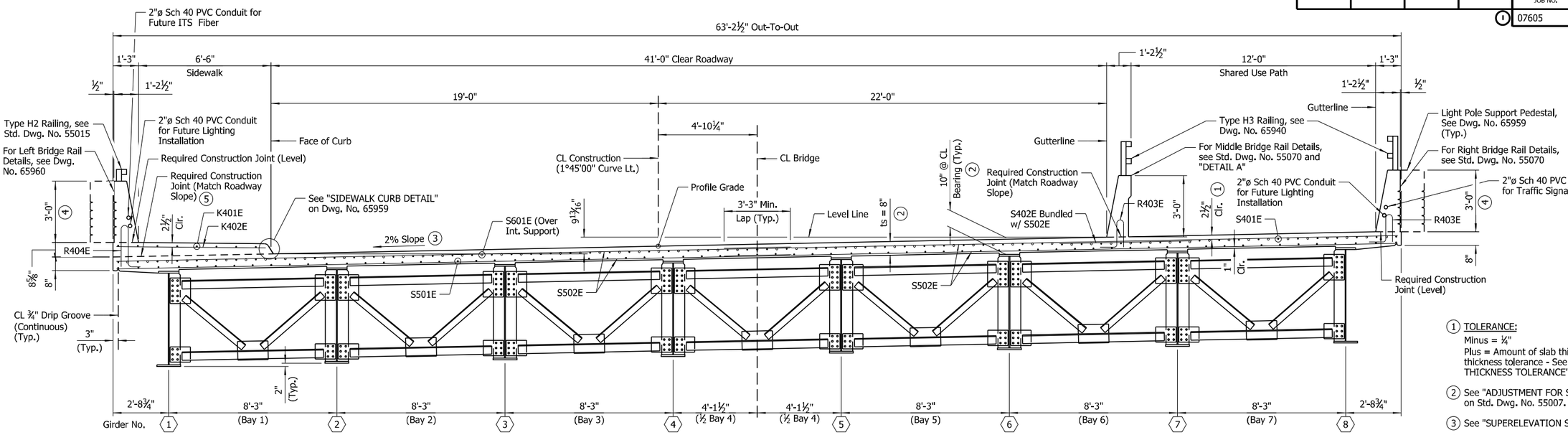

TYPICAL ROADWAY SECTION

(Looking Ahead)
Scale: ⅜" = 1'-0"

SLAB REINFORCING:

Transverse: S502E @ 6" O.C. In Top and Bottom
S402E @ 6" O.C. in Top, Centered under Middle Rail (Bundled with S502E)

Longitudinal: S401E in Top (Placed as Shown)
S501E in Bottom (Placed as Shown)
S601E in Top (Placed as Shown over Int. Support)

SIDEWALK REINFORCING:

Transverse: K402E & K403E @ 6" O.C.
Longitudinal: K401E (Placed as Shown)

NOTE:
All horizontal dimensions shown are measured along a line radial to CL Construction.

(1) TOLERANCE:
Minus = ¼"
Plus = Amount of slab thickening used to meet slab thickness tolerance - See "ADJUSTMENT FOR SLAB THICKNESS TOLERANCE" on Std. Dwg. No. 55007.

(2) See "ADJUSTMENT FOR SLAB THICKNESS TOLERANCE" on Std. Dwg. No. 55007.

(3) See "SUPERELEVATION SKETCH" on Dwg. No. 65925.

(4) Portion of light pole supports and outside face of Left and Right Bridge Rails to receive an Ashlar Stone Finish. See Dwg. No. 65959.

(5) Roughen concrete surface per Subsection 802.12(b) prior to constructing sidewalk.

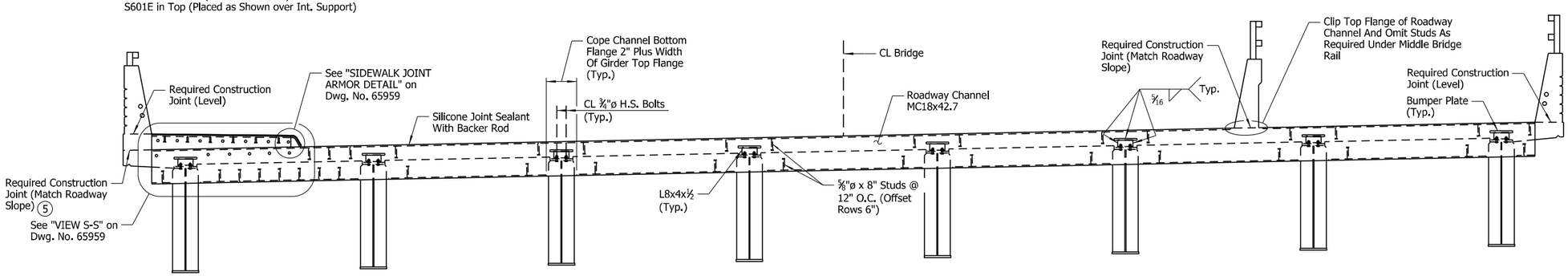

TYPICAL SECTION THRU JOINT

(Shown At End Bent 1, Looking Ahead; End Bent 3 Similar)
No Scale

NOTE:
All structural steel shall be ASTM A709, Gr. 50 unless noted otherwise, and all structural steel shall be paid for as "STRUCTURAL STEEL IN PLATE GIRDER SPANS (A709, GR. 50)".

EXPANSION DEVICE:
Rdwy. Channel: MC18x42.7
Conn. Angles: L8x4x½
Detail device ⅛" high and provide ¼" shims using 2 - 1/16" and 1 - ⅛" plates

NOTES:
For Standard General Notes and details, see Std. Dwg. Nos. 55006 & 55007.

Class 2 Protective Surface Treatment shall be applied to the roadway and sidewalk (including curbing) surfaces, to the inside face and top of the Left and Right Bridge Rails, and to both faces and top of the Middle Rail Bridge.

Class 3 Textured Coating Finish shall be applied to bridge surfaces as specified in Special Provision "TEXTURED COATING FINISH" and in accordance with Subsection 802.19(b)(3). Textured Coating Finish shall not be applied on surfaces where Class 2 Protective Surface Treatment is applied.

Bar positions and clearances from the forms shall be maintained by means of stays, ties, hangers, or other approved devices per Subsection 804.06. Placement of slab bolsters or high-chairs with full-length lower runners directly on removable deck forms will not be allowed.

For "BAR LIST" and "BAR BENDING DIAGRAMS", see Dwg. No. 65937.

For additional details of poured silicone joints, see Std. Dwg. No. 55008.

For "SCREED RAIL SUPPORT FOR PLATE GIRDERS", see Std. Dwg. No. 55007.

For additional details of conduit, see Electrical Drawings.

The profile of the Roadway Channel shall be established based on the vertical curve in conjunction with the skew.

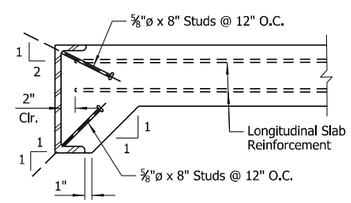

DETAIL OF ANCHORS AND PLACEMENT OF LONGITUDINAL REINFORCEMENT

No Scale

NOTE:
As an alternate to ⅝"ø studs, ½"ø x 8" studs spaced @ 8" O.C. may be used. Use weight of ⅝"ø stud as basis of measurement of Structural Steel in anchors.

TABLE OF SILICONE JOINT DATA

Bent No(s).	"A" Width Perpendicular To Joint At 24 Hour Average Temperature (6) Of:			"B" Perpendicular To Joint At 60°F	Bumper Plate Size
	40°F	60°F	80°F		
1 & 3	2 3/16"	2"	1 13/16"	2¼"±	1" x 1" x 12"

(6) The temperature used to set the joint opening shall be the approximate average air temperature during the 24-hour period immediately before the bolts are tightened. The Engineer shall establish the temperature. Interpolation of the table may be necessary.

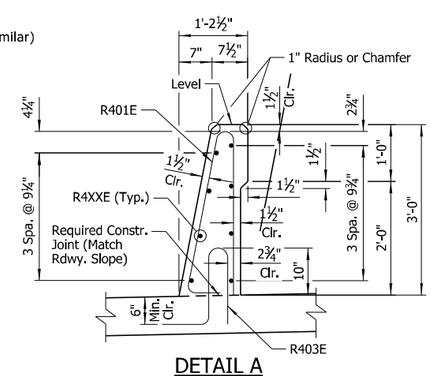

DETAIL A

(Middle Rail)
Scale: ¾" = 1'-0"

STATE OF ARKANSAS
LICENSED PROFESSIONAL ENGINEER
No.14498
ADAM B. HALL

DIGITALLY SIGNED 6/30/2023
BRIDGE ENGINEER

SHEET 1 OF 6
DETAILS OF 220'-0" CONTINUOUS PLATE GIRDER UNIT
HIGHWAY 31 OVER I-40

ROUTE SEC.

ARKANSAS STATE HIGHWAY COMMISSION

LITTLE ROCK, ARK.

DRAWN BY:	CWT	DATE:	FEB. 2022	FILENAME:	b061613x1_s1.dgn
CHECKED BY:	ABH	DATE:	MAR. 2022	SCALE:	As Shown
DESIGNED BY:	RAK	DATE:	FEB. 2022		

BRIDGE NO. 07605 DRAWING NO. 65935

6/29/2023 1:37:12 PM
abhall
WORKSPACE(ARDOT Bridge (2019)
L:\2021\21T01028 - ARDOT 061613 I-40 Strs and Apprs\Drawings\b061613x1_S401_SX.dgn
REVISED DATE:

DATE REVISED	DATE FILMED	DATE REVISED	DATE FILMED

FED. ROAD DIST. NO.	STATE	FED. AID PROJ. NO.	SHEET NO.	TOTAL SHEETS
6	ARK.			
JOB NO.		061613	127	215
(I) 07605		220'-0" UNIT		65936

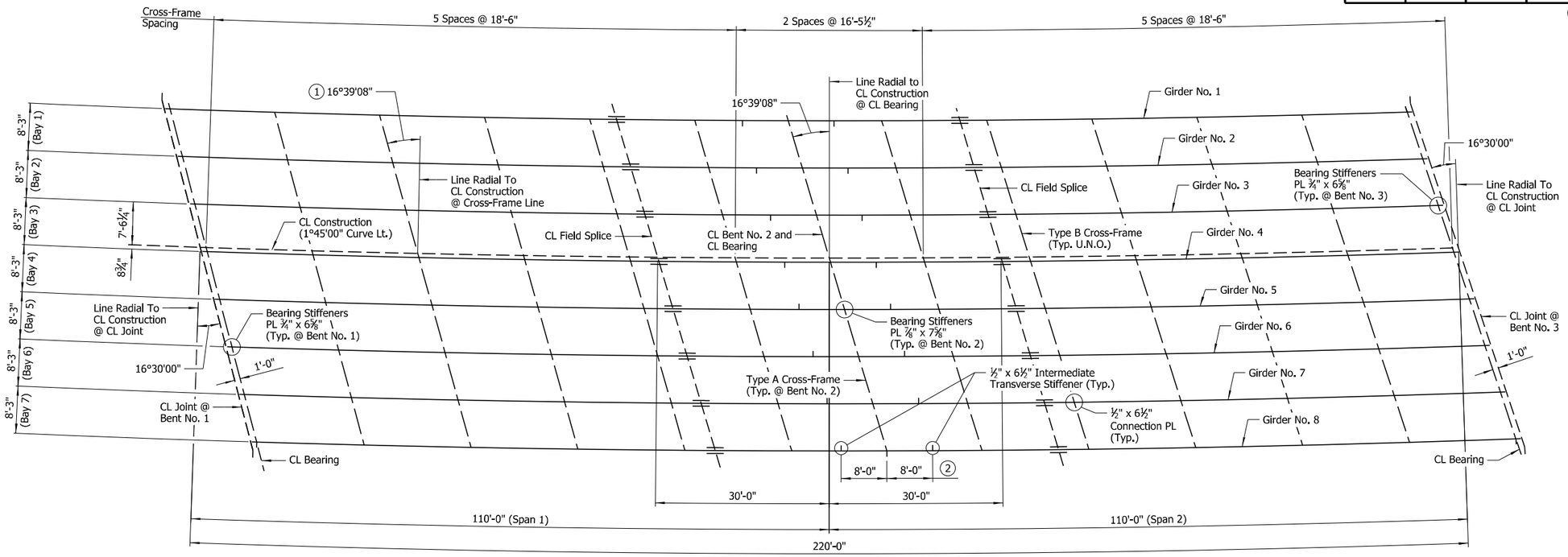

(1) Typ. all cross-frame lines except at end bents. Cross-frames at end bents shall be placed along CL Bearing (parallel to CL Joint)

FRAMING PLAN

Scale: 3/32" = 1'-0"

LEGEND

U.N.O. = Unless Noted Otherwise

(2) Measured along CL Girder (Typ. all girders)

(3) CL Required Fange Shop Splice (Typ. Top and Bottom)

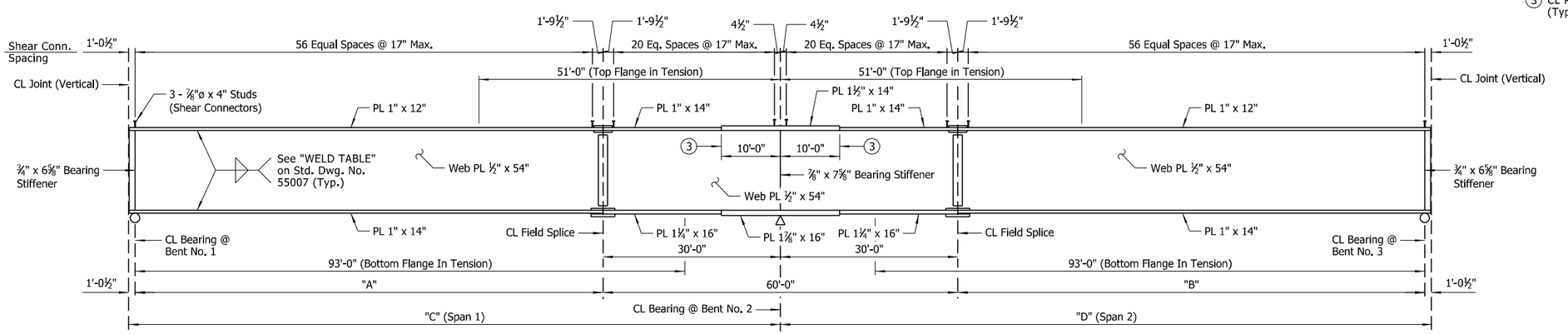

GIRDER ELEVATION

(Dimensions Measured Along CL Girder)
No Scale

NOTES:
For "GENERAL NOTES", see Std. Dwg. No. 55006.

All structural steel shall be ASTM A709, Gr. 50 unless noted otherwise and shall be paid for at the unit price per pound bid for "STRUCTURAL STEEL IN PLATE GIRDER SPANS (A709, GR. 50)".

Bolted Field Splices shown may be eliminated or shop welded splices may be substituted with approval of the Engineer. Payment will be made on the basis of the Plan Quantities.

For "DETAILS OF WELDED SPLICES FOR PLATE GIRDERS", "SHEAR CONNECTOR DETAIL" and "SCREED RAIL SUPPORT FOR PLATE GIRDERS", see Std. Dwg. No. 55007.

NOTES:
The erection of the structural steel shall be performed according to a plan permitting the steel to be erected plumb with bolts tightened while the steel is as close as possible to the no-load condition, so that the bolt holes can be aligned. This requirement may necessitate the use of large capacity cranes, temporary shoring or jacking frames.

The Contractor shall ensure that girders are stable throughout the erection process. The Contractor will be responsible for providing temporary bracing or stiffening devices to accommodate handling stresses in individual members or segments of the structure during erection.

For field splice details, see Dwg. No. 65938.

For cross-frame, stiffener and connection plate details, see Dwg. No. 65939.

All girders are oriented along curves concentric with CL Construction.

Unless noted otherwise, all longitudinal dimensions in "FRAMING PLAN" are measured along CL Construction.

TABLE OF VARIABLES

Girder No.	"A"	"B"	"C"	"D"
1	78'-0 15/16"	78'-2 5/8"	109'-1 7/16"	109'-3 1/8"
2	78'-4 9/16"	78'-5 11/16"	109'-5 11/16"	109'-6 3/16"
3	78'-8 3/16"	78'-8 11/16"	109'-8 11/16"	109'-9 3/16"
4	78'-11 13/16"	78'-11 3/4"	110'-0 5/16"	110'-0 1/4"
5	79'-3 7/16"	79'-2 13/16"	110'-3 15/16"	110'-3 5/16"
6	79'-7 1/16"	79'-5 13/16"	110'-7 9/16"	110'-6 5/16"
7	79'-10 5/8"	79'-8 7/8"	110'-11 1/8"	110'-9 3/8"
8	80'-2 1/4"	79'-11 15/16"	111'-2 3/4"	111'-0 7/16"

STATE OF ARKANSAS
LICENSED PROFESSIONAL ENGINEER
No.14498
ADAM B. HALL

DIGITALLY SIGNED 6/30/2023
BRIDGE ENGINEER

SHEET 2 OF 6
DETAILS OF 220'-0" CONTINUOUS
PLATE GIRDER UNIT
HIGHWAY 31 OVER I-40

ROUTE SEC.

ARKANSAS STATE HIGHWAY COMMISSION

LITTLE ROCK, ARK.

DRAWN BY: HEW DATE: FEB. 2022 FILENAME: b061613x1_s2.dgn
CHECKED BY: ABH DATE: MAR. 2022 SCALE: As Shown
DESIGNED BY: JME DATE: FEB. 2022
BRIDGE NO. 07605 DRAWING NO. 65936

6/29/2023 1:37:14 PM
abhall
WORKSPACE\ARDOT Bridge (2019)
L:\2021\21T01028 - ARDOT 061613 I-40 Strs and Apprs\Drawings\b061613x1_S402_SF.dgn
REVISED DATE:

DATE REVISED	DATE FILMED	DATE REVISED	DATE FILMED	FED. ROAD DIST. NO.	STATE	FED. AID PROJ. NO.	SHEET NO.	TOTAL SHEETS
				6	ARK.			
				JOB NO.		061613	128	215
				(I) 07605		220'-0" UNIT		65937

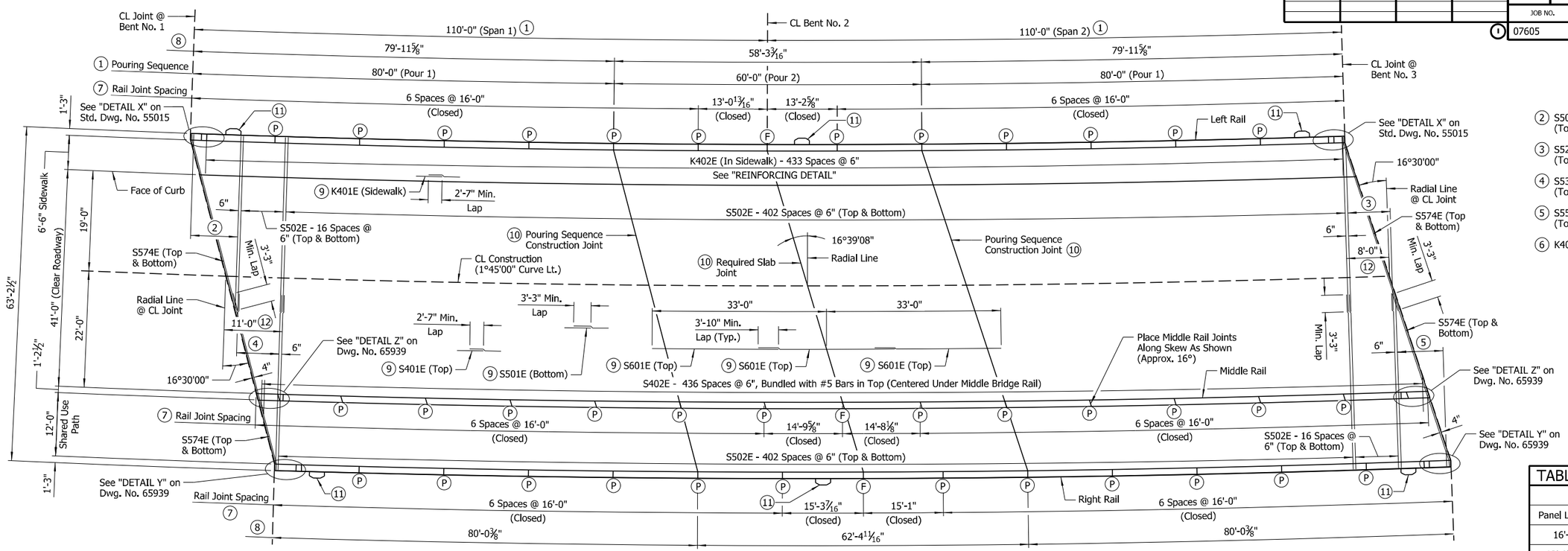

(2) S503E - S521E, 18 Spaces @ 6" (Top & Bottom)

(3) S522E - S538E, 16 Spaces @ 6" (Top & Bottom)

(4) S539E - S555E, 16 Spaces @ 6" (Top & Bottom)

(5) S556E - S573E, 17 Spaces @ 6" (Top & Bottom)

(6) K403E - K406E, 3 Spa. @ 6"

TABLE OF VARIABLES

Closed Rail Panels		
Panel Length	A	R4XXE
16'-0"	31	05
13'-0 13/16"	26	06
13'-2⅝"	26	07
14'-9⅝"	29	08
14'-8⅛"	29	09
15'-3 7/16"	30	10
15'-1"	30	11

BAR LIST

MARK	NO. REQ'D	LENGTH	P.D.
R401E	1328	6'-4"	2½"
R402E	144	5'-6"	Str.
R403E	890	3'-6"	3", 3¾"
R404E	438	5'-0"	3", 3¾"
R405E	288	15'-8"	Str.
R406E	8	12'-8"	Str.
R407E	8	12'-10"	Str.
R408E	8	14'-5"	Str.
R409E	8	14'-4"	Str.
R410E	8	14'-11"	Str.
R411E	8	14'-9"	Str.
H401E	6	2'-11"	2"
H402E	2	3'-7"	2"
H403E	20	4'-9"	2"
H404E	4	5'-8"	2"

BAR LIST

MARK	NO. REQ'D	LENGTH	P.D.
S401E	396	39'-3"	Str.
S402E	437	6'-6"	Str.
S501E	276	58'-0"	Str.
S502E	1680	33'-1"	Str.
S503E To S521E	2 Each	2'-5" To 32'-7"	Str.
S522E To S538E	2 Each	30'-9" To 3'-11"	Str.
S539E To S555E	2 Each	4'-6" To 31'-10"	Str.
S556E To S573E	2 Each	32'-0" To 3'-0"	Str.
S574E	8	34'-5"	3¾"
S601E	195	24'-7"	Str.

BAR LIST

MARK	NO. REQ'D	LENGTH	P.D.
K401E	48	38'-10"	Str.
K402E	435	7'-3"	Str.
K403E To K406E	1 Each	2'-3" To 7'-3"	Str.
K407E	1	4'-11"	Str.
K408E	1	3'-3"	Str.
K409E	2	7'-6"	3"

NOTES:
Dimensions of bars are out-to-out.

Bar designations ending with "E" indicate epoxy coated bars.

For bar bending diagrams of R401E and R403E, see Std. Dwg. No. 55070.

BAR BENDING DIAGRAMS

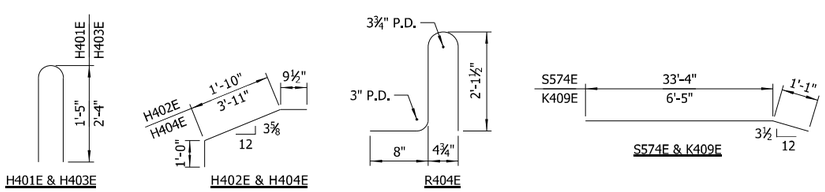

REINFORCING PLAN & SLAB POURING SEQUENCE

Scale: 3/32" = 1'-0"

(7) Measured along inside face of rail. Rail joints designated with symbol (F) shall be stopped 6" from top of slab or sidewalk. All other rail joints with symbol (P) shall be partial-depth joints stopped 16" from top of slab or sidewalk.

(8) Measured along edge of deck

(9) Placed as shown in "TYPICAL ROADWAY SECTION" on Dwg. No. 65935

(10) See "TRANSVERSE SLAB JOINT DETAIL" on Std. Dwg. No. 55007

(11) Light Pole Support Pedestal (See Dwg. No. 65959 for details and locations)

(12) Measured to first S502E Lapped w/S502E

NOTES:
Pours with the same number may be placed simultaneously or separately. All Pours (1) must be placed before Pour (2) can be placed. 48 hours shall elapse between the end of a pour and the start of the next pour. 72 hours shall elapse between adjacent pours.

Concrete in bridge superstructure shall be placed, consolidated and screeded off for the entire pour before any concrete has taken its initial set. This may require the use of a retarding agent.

A minimum of 72 hours shall elapse between the completion of the entire deck slab and the start of a sidewalk pour. A minimum of 72 hours shall elapse between the completion of the entire sidewalk and the start of a railing pour. Any sidewalk pours made before the entire slab unit has been placed must be approved by the Engineer. Any railing pours made before the entire sidewalk has been placed must be approved by the Engineer. The Contractor must obtain approval from the Engineer for any deviations from the pouring sequence shown.

Required slab joints and pouring sequence joints shall align with rail joints as shown.

For "GENERAL NOTES", see Std. Dwg. No. 55006.

Unless noted otherwise, spacing shown for all transverse reinforcing is measured along CL Construction. All transverse reinforcing shall be placed on lines radial to CL Construction.

All longitudinal lines and longitudinal slab reinforcing shall be placed along curves concentric with CL Construction.

For Left Rail details, see Dwg. No. 65960.

For Middle Rail details, see Std. Dwg. No. 55070 and "DETAIL A" on Dwg. No. 65935.

For Right Rail details, see Std. Dwg. No. 55070.

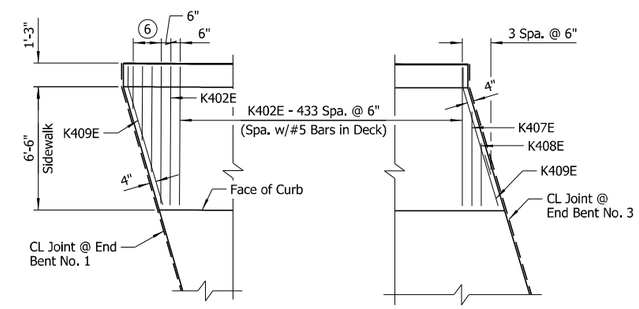

REINFORCING DETAIL

Scale: ¼" = 1'-0"

STATE OF ARKANSAS
LICENSED PROFESSIONAL ENGINEER
No. 14498
ADAM B. HALL

DIGITALLY SIGNED 6/30/2023
BRIDGE ENGINEER

SHEET 3 OF 6
DETAILS OF 220'-0" CONTINUOUS PLATE GIRDER UNIT
HIGHWAY 31 OVER I-40

ROUTE SEC.

ARKANSAS STATE HIGHWAY COMMISSION

LITTLE ROCK, ARK.

DRAWN BY:	CWT	DATE:	FEB. 2022	FILENAME:	b061613x1_s3.dgn
CHECKED BY:	ABH	DATE:	MAR. 2022	SCALE:	As Shown
DESIGNED BY:	RAK	DATE:	JAN. 2022		

BRIDGE NO. 07605 DRAWING NO. 65937

6/29/2023 1:37:15 PM
abhall
WORKSPACE\ARDOT Bridge (2019)
L:\2021\21T01028 - ARDOT 061613 I-40 Strs and Apprs\Drawings\b061613x1_S403_SB.dgn
REVISED DATE:

DATE REVISED	DATE FILMED	DATE REVISED	DATE FILMED	FED. ROAD DIST. NO.	STATE	FED. AID PROJ. NO.	SHEET NO.	TOTAL SHEETS
				6	ARK.			
				JOB NO.		061613	129	215
				07605		220'-0" UNIT		65938

TABLE OF DEAD LOAD DEFLECTIONS (INCHES)

	Point Of Deflection	Girder 1			Girder 2			Girder 3			Girder 4			Girder 5		
		Structural Steel	Structural Steel + Slab	Structural Steel + Slab + Sidewalk + Rail	Structural Steel	Structural Steel + Slab	Structural Steel + Slab + Sidewalk + Rail	Structural Steel	Structural Steel + Slab	Structural Steel + Slab + Sidewalk + Rail	Structural Steel	Structural Steel + Slab	Structural Steel + Slab + Sidewalk + Rail	Structural Steel	Structural Steel + Slab	Structural Steel + Slab + Sidewalk + Rail
SPAN NO. 1	1.0	0.000	0.000	0.000	0.000	0.000	0.000	0.000	0.000	0.000	0.000	0.000	0.000	0.000	0.000	0.000
	1.1	0.120	0.607	0.773	0.127	0.664	0.782	0.131	0.703	0.769	0.135	0.727	0.764	0.136	0.735	0.772
	1.2	0.221	1.112	1.416	0.232	1.213	1.427	0.241	1.287	1.408	0.246	1.328	1.396	0.249	1.343	1.411
	1.3	0.287	1.447	1.845	0.302	1.579	1.857	0.313	1.674	1.831	0.320	1.728	1.817	0.324	1.749	1.838
	1.4	0.315	1.588	2.028	0.332	1.734	2.039	0.344	1.839	2.011	0.352	1.898	1.995	0.357	1.923	2.021
	1.5	0.300	1.511	1.935	0.316	1.648	1.939	0.327	1.747	1.909	0.334	1.803	1.894	0.339	1.826	1.919
	1.6	0.248	1.248	1.604	0.261	1.363	1.606	0.271	1.444	1.576	0.277	1.490	1.563	0.280	1.507	1.583
	1.7	0.174	0.872	1.128	0.182	0.948	1.120	0.188	1.004	1.095	0.193	1.037	1.086	0.195	1.050	1.103
	1.8	0.095	0.477	0.622	0.099	0.517	0.613	0.103	0.549	0.598	0.105	0.566	0.592	0.107	0.574	0.603
	1.9	0.025	0.128	0.172	0.027	0.143	0.172	0.028	0.151	0.164	0.029	0.155	0.161	0.029	0.156	0.164
	2.0	0.000	0.000	0.000	0.000	0.000	0.000	0.000	0.000	0.000	0.000	0.000	0.000	0.000	0.000	0.000
SPAN NO. 2	2.1	0.028	0.135	0.176	0.028	0.143	0.172	0.029	0.151	0.166	0.030	0.156	0.164	0.030	0.158	0.166
	2.2	0.091	0.450	0.579	0.095	0.489	0.581	0.098	0.515	0.564	0.100	0.529	0.555	0.100	0.532	0.558
	2.3	0.174	0.866	1.110	0.182	0.940	1.111	0.188	0.992	1.086	0.191	1.019	1.070	0.193	1.028	1.079
	2.4	0.255	1.271	1.623	0.265	1.373	1.618	0.274	1.451	1.588	0.279	1.494	1.570	0.282	1.508	1.584
	2.5	0.306	1.532	1.953	0.321	1.662	1.955	0.331	1.754	1.918	0.337	1.805	1.897	0.339	1.819	1.912
	2.6	0.322	1.613	2.053	0.337	1.751	2.056	0.348	1.847	2.019	0.354	1.900	1.997	0.357	1.916	2.014
	2.7	0.295	1.479	1.881	0.309	1.605	1.883	0.318	1.693	1.849	0.324	1.742	1.831	0.327	1.757	1.847
	2.8	0.227	1.137	1.445	0.237	1.234	1.447	0.245	1.303	1.422	0.249	1.339	1.407	0.251	1.351	1.420
	2.9	0.122	0.613	0.780	0.129	0.673	0.789	0.133	0.709	0.773	0.135	0.728	0.764	0.136	0.733	0.771
	3.0	0.000	0.000	0.000	0.000	0.000	0.000	0.000	0.000	0.000	0.000	0.000	0.000	0.000	0.000	0.000

TABLE OF DEAD LOAD DEFLECTIONS (INCHES) CONTINUED

	Point Of Deflection	Girder 6			Girder 7			Girder 8		
		Structural Steel	Structural Steel + Slab	Structural Steel + Slab + Sidewalk + Rail	Structural Steel	Structural Steel + Slab	Structural Steel + Slab + Sidewalk + Rail	Structural Steel	Structural Steel + Slab	Structural Steel + Slab + Sidewalk + Rail
SPAN NO. 1	1.0	0.000	0.000	0.000	0.000	0.000	0.000	0.000	0.000	0.000
	1.1	0.137	0.730	0.786	0.136	0.712	0.788	0.136	0.686	0.779
	1.2	0.250	1.336	1.439	0.250	1.303	1.442	0.249	1.254	1.424
	1.3	0.326	1.740	1.874	0.325	1.697	1.879	0.324	1.631	1.854
	1.4	0.358	1.910	2.058	0.358	1.866	2.068	0.355	1.789	2.035
	1.5	0.341	1.816	1.958	0.340	1.772	1.966	0.338	1.702	1.938
	1.6	0.282	1.501	1.620	0.282	1.466	1.629	0.281	1.409	1.607
	1.7	0.197	1.046	1.131	0.197	1.022	1.138	0.196	0.981	1.121
	1.8	0.108	0.573	0.621	0.108	0.561	0.627	0.107	0.536	0.614
	1.9	0.030	0.159	0.174	0.030	0.155	0.175	0.030	0.148	0.171
	2.0	0.000	0.000	0.000	0.000	0.000	0.000	0.000	0.000	0.000
SPAN NO. 2	2.1	0.029	0.154	0.167	0.029	0.151	0.170	0.029	0.143	0.167
	2.2	0.100	0.529	0.572	0.099	0.513	0.572	0.098	0.488	0.561
	2.3	0.193	1.020	1.101	0.191	0.991	1.102	0.189	0.945	1.082
	2.4	0.281	1.491	1.608	0.279	1.450	1.610	0.276	1.387	1.584
	2.5	0.339	1.802	1.943	0.337	1.753	1.945	0.334	1.680	1.916
	2.6	0.357	1.898	2.046	0.355	1.846	2.047	0.352	1.771	2.018
	2.7	0.327	1.741	1.877	0.325	1.694	1.879	0.322	1.624	1.850
	2.8	0.251	1.339	1.444	0.250	1.303	1.446	0.248	1.249	1.423
	2.9	0.137	0.730	0.788	0.136	0.709	0.787	0.135	0.679	0.774
	3.0	0.000	0.000	0.000	0.000	0.000	0.000	0.000	0.000	0.000

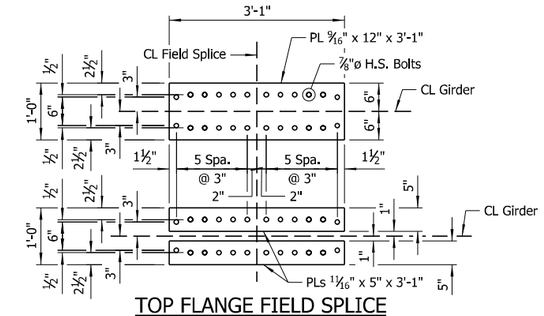

TOP FLANGE FIELD SPLICE

Scale: ¾" = 1'-0"

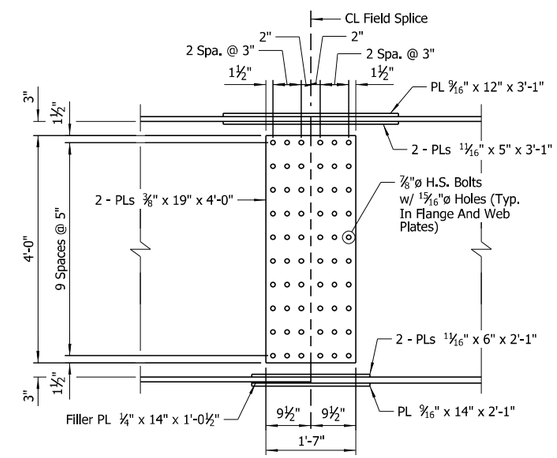

ELEVATION OF FIELD SPLICE

Scale: ¾" = 1'-0"

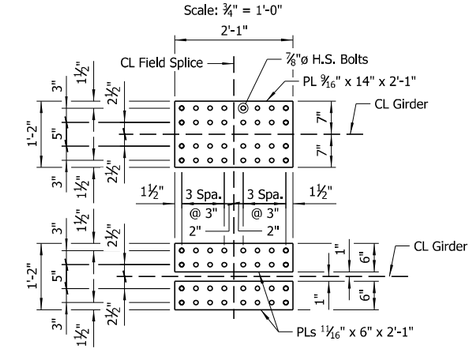

BOTTOM FLANGE FIELD SPLICE

Scale: ¾" = 1'-0"

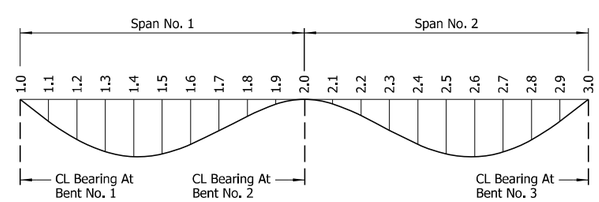

DEAD LOAD DEFLECTION DIAGRAM

No Scale

NOTES:

Camber for dead load deflection plus vertical curve +/- ¼" tolerance. Deflections shown are along CL Girder from the plane perpendicular to the web extending from CL Bearing to CL Bearing. Vertical curve corrections are not included. Negative sign (-) indicates point above chord.

Dead load deflections shown include an assumed loading of 18 psf to account for stay-in-place metal deck forms.

Revision to the deflection tables may be necessary upon review of the Contractor's submitted forming details.

STATE OF ARKANSAS
LICENSED PROFESSIONAL ENGINEER
No.14498
ADAM B. HALL

DIGITALLY SIGNED 6/30/2023

BRIDGE ENGINEER

SHEET 4 OF 6
DETAILS OF 220'-0" CONTINUOUS
PLATE GIRDER UNIT
HIGHWAY 31 OVER I-40

ROUTE SEC.

ARKANSAS STATE HIGHWAY COMMISSION

LITTLE ROCK, ARK.

DRAWN BY:	HEW	DATE:	FEB. 2022	FILENAME:	b061613x1_s4.dgn
CHECKED BY:	ABH	DATE:	MAR. 2022	SCALE:	As Shown
DESIGNED BY:	JME	DATE:	FEB. 2022		

BRIDGE NO. 07605 DRAWING NO. 65938

abhall 6/29/2023 1:37:17 PM
WORKSPACE\ARDOT Bridge (2019)
L:\2021\21T01028 - ARDOT 061613 I-40 Strs and Apprs\Drawings\b061613x1_S404_DF.dgn
REVISED DATE:

DATE REVISED	DATE FILMED	DATE REVISED	DATE FILMED	FED. ROAD DIST. NO.	STATE	FED. AID PROJ. NO.	SHEET NO.	TOTAL SHEETS
				6	ARK.			
				JOB NO.		061613	130	215
				07605		220'-0" UNIT		65939

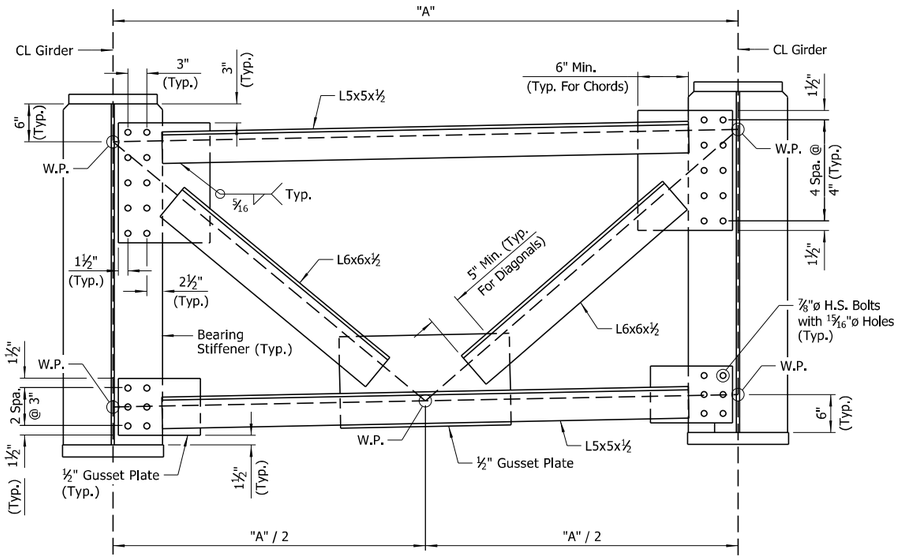

TYPE A CROSS-FRAME DETAIL

No Scale

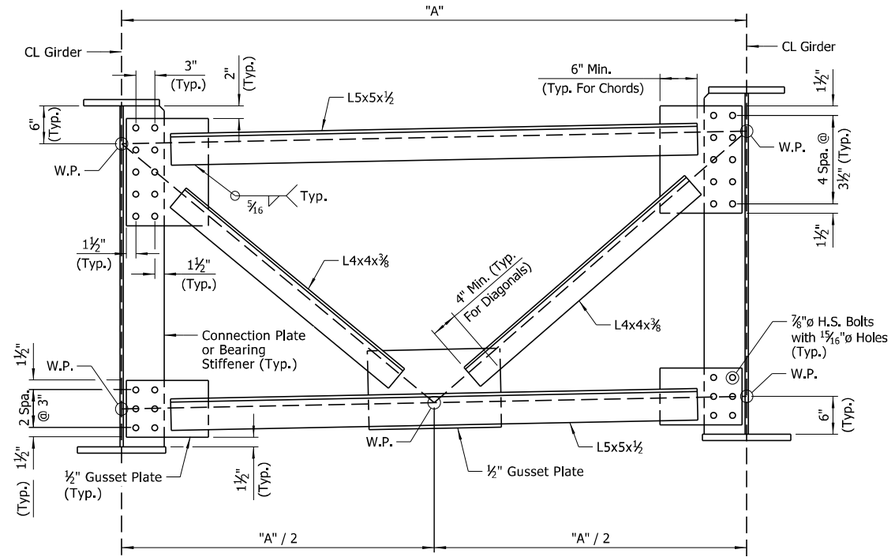

TYPE B CROSS-FRAME DETAIL

No Scale

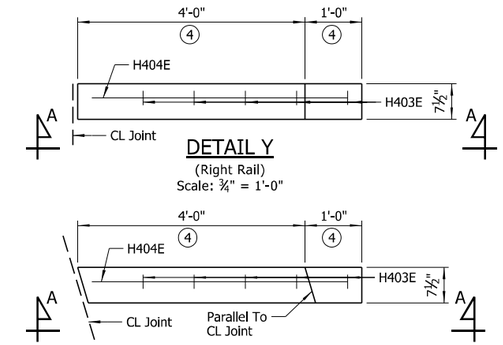

DETAIL Y

(Right Rail)
Scale: ¾" = 1'-0"

DETAIL Z

(Middle Rail)
Scale: ¾" = 1'-0"

④ Measured along inside face of rail

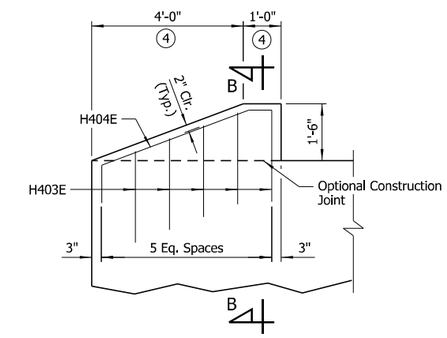

VIEW A-A

No Scale

NOTES:
All field connections shall be bolted with ⅞"ø H.S. bolts using 15/16"ø open holes.

Cross-Frames at end bents shall be fabricated such that horizontal legs of members point away from CL Joint.

Bearing Stiffeners shall be fabricated to be vertical in their final positions.

① See "WELD TABLE" on Std. Dwg. No. 55007 for minimum weld size.

② Stop weld ¼" to 1" from end of clip (Typ.)

③ If permanent deck forms are used, the Fabricator shall clip the plate as necessary to accommodate the deck form supports.

TABLE OF VARIABLES			
Braces Near End Bents		All Other Braces	
Bay No(s).	"A"	Bay No(s).	"A"
1-2	8'-7 5/16"	1-2	8'-7⅜"
3-5	8'-7¼"	3-5	8'-7 5/16"
6-7	8'-7 3/16"	6-7	8'-7¼"

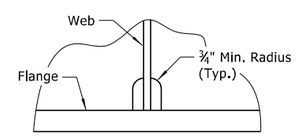

Height and width of clip shall be as noted in other details.

ALTERNATE CLIP DETAIL

(For Bearing Stiffeners, Intermediate Transverse Stiffeners & Cross-Frame Connection Plates)
No Scale

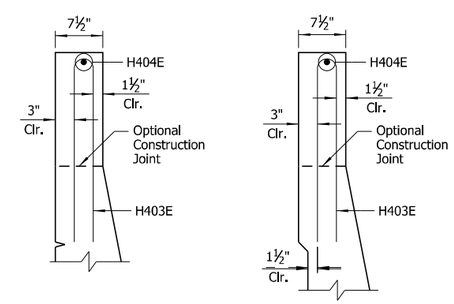

SECTION B-B

(Right Rail)
Scale: 1" = 1'-0"

SECTION B-B

(Middle Rail)
Scale: 1" = 1'-0"

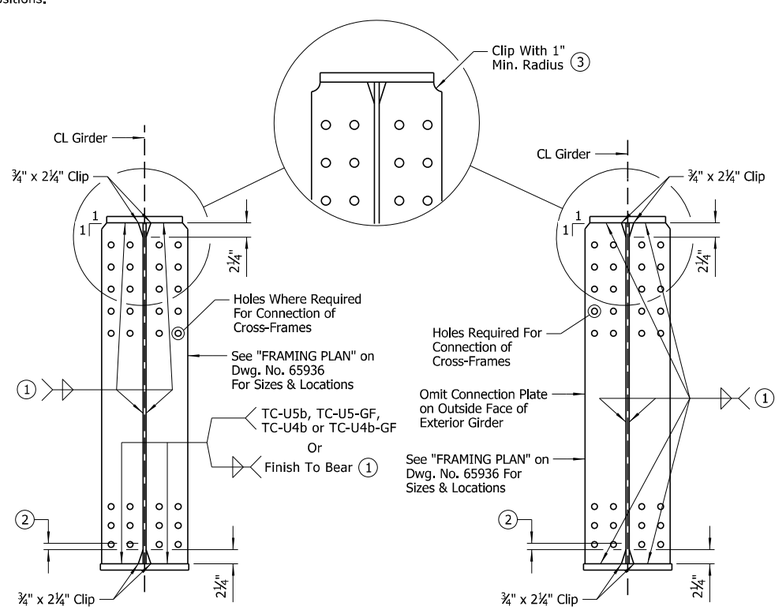

BEARING STIFFENER DETAIL

No Scale

GIRDER WITH 12" WIDE TOP FLANGE

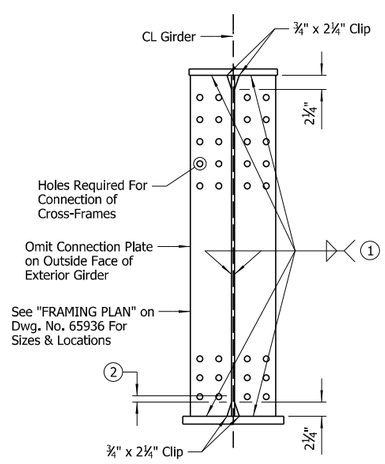

GIRDER WITH 14" WIDE TOP FLANGE

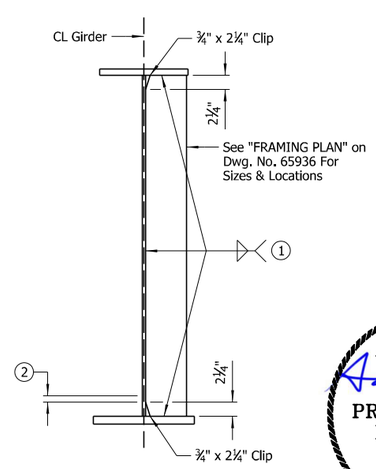

INTERMEDIATE TRANSVERSE STIFFENER DETAIL

No Scale

CONNECTION PLATE DETAIL

No Scale

STATE OF ARKANSAS
LICENSED PROFESSIONAL ENGINEER
No.14498
ADAM B. HALL

DIGITALLY SIGNED 6/30/2023
BRIDGE ENGINEER

SHEET 5 OF 6
DETAILS OF 220'-0" CONTINUOUS
PLATE GIRDER UNIT
HIGHWAY 31 OVER I-40

ROUTE SEC.

ARKANSAS STATE HIGHWAY COMMISSION

LITTLE ROCK, ARK.

DRAWN BY:	HEW	DATE:	FEB. 2022	FILENAME:	b061613x1_s5.dgn
CHECKED BY:	ABH	DATE:	MAR. 2022	SCALE:	As Shown
DESIGNED BY:	JME	DATE:	FEB. 2022		

BRIDGE NO. 07605 DRAWING NO. 65939

7/13/2023 8:53:12 AM
abhall
WORKSPACE:ARDOT Bridge (2019)
L:\2021\21T01028 - ARDOT 061613 I-40 Strs and Apprs\Drawings\b061613x1_S405_SD.dgn
REVISED DATE:

DATE REVISED	DATE FILMED	DATE REVISED	DATE FILMED	FED. ROAD DIST. NO.	STATE	FED. AID PROJ. NO.	SHEET NO.	TOTAL SHEETS
				6	ARK.			
				JOB NO.		061613	131	215
				07605		220'-0" UNIT		65940

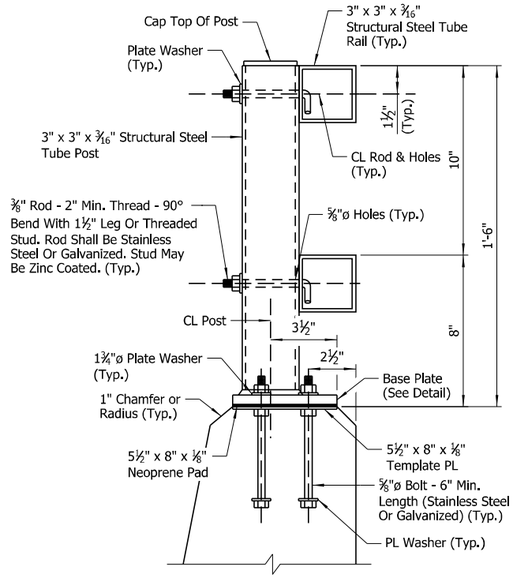

MIDDLE RAIL

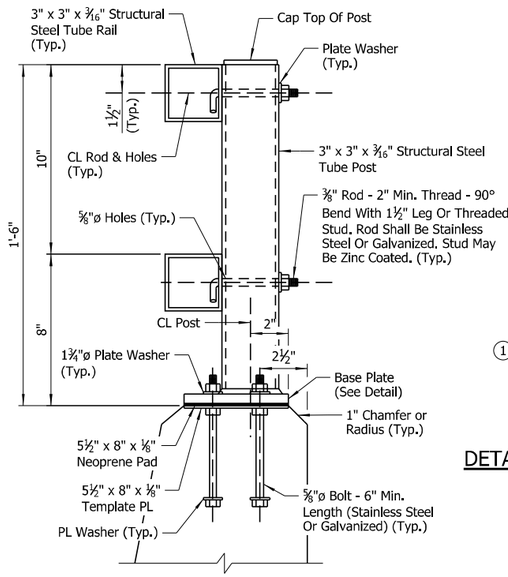

RIGHT RAIL

DETAILS OF POST ANCHOR SYSTEM FOR TYPE H3 RAIL

(Cast-in-Place Bolts)
Scale: 3" = 1'-0"

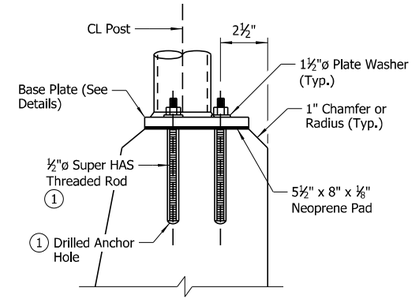

1 HILTI HIT RE 500 Epoxy Adhesive Anchor System with 4½" embedment or an approved equal.

The HILTI Epoxy Adhesive Anchor System (or approved equal) shall be installed in accordance with Manufacturer's recommendations.

DETAILS OF ALTERNATE POST ANCHOR SYSTEM TYPE H3 RAIL

(Epoxy Adhesive Anchors)
(Middle Rail Shown, Right Rail Similar)
Scale: 3" = 1'-0"

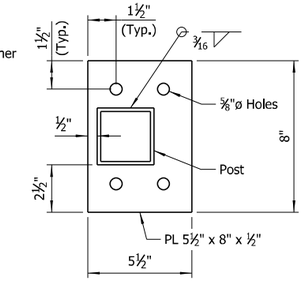

ALTERNATIVE BASE PLATE

Scale: 3" = 1'-0"

NOTE:
For details of post and rail not shown, see "DETAILS OF POST ANCHOR SYSTEM FOR TYPE H3 RAIL"

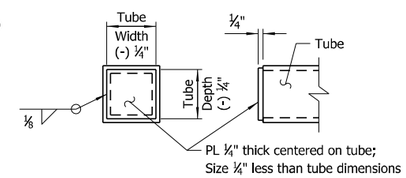

END ELEV. SIDE ELEV.

DETAILS OF END CAPS

Scale: 3" = 1'-0"

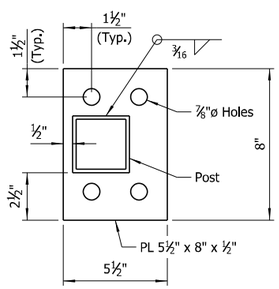

BASE PLATE

Scale: 3" = 1'-0"

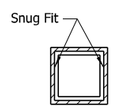

ALTERNATE INSTALLATION

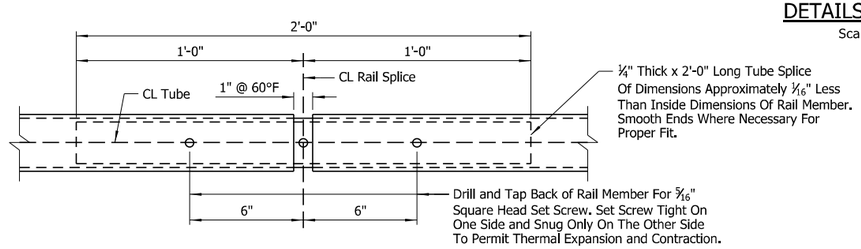

SPLICE DETAIL

Scale: 3" = 1'-0"

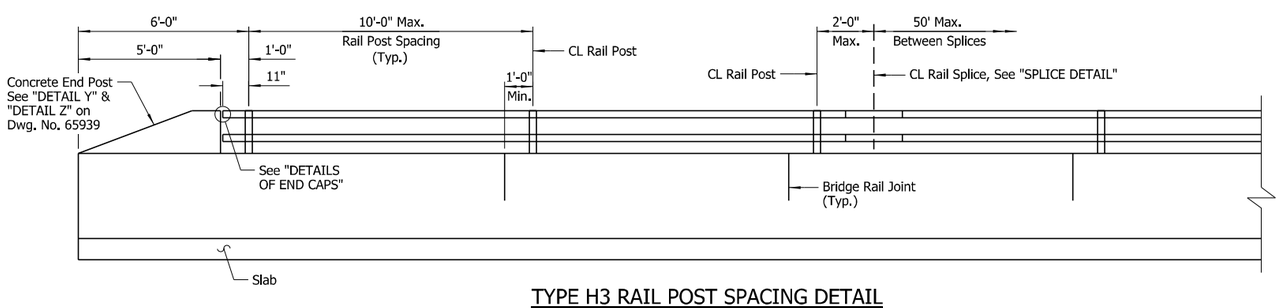

TYPE H3 RAIL POST SPACING DETAIL

(Horizontal Dimensions are Along Inside Face of Rail)
No Scale

GENERAL NOTES FOR TYPE H3 BRIDGE RAILING:

Rail layout shall conform to vertical and horizontal alignment of the bridge. All posts shall be vertical. Rail sections shall be fabricated to attach to at least three posts.

Splices in rail tubing shall be at 50' maximum spacing. The centerline of splices shall be located a maximum of 2 feet from centerline of post.

Base plates shall not be placed upon areas that are improperly finished, deformed or irregular.

Bridge railing, including posts, templates and base plates, fasteners, and neoprene pads shall be paid for at the contract unit price bid per linear foot for "METAL BRIDGE RAILING (TYPE H3)". When required elsewhere in the plans, powdered coating finish and repair of powdered coating finish shall be considered subsidiary to the item "METAL BRIDGE RAILING (TYPE H3)".

Shop drawings showing details of railing shall be submitted and approval secured prior to fabrication.

MATERIALS:

Rail tubing, posts, end caps, and base plates shall conform to ASTM A709, Gr. 36 or ASTM A500-Grade B, and shall be galvanized after fabrication in accordance with Subsection 806.02(c). When required elsewhere in the plans, steel rail members shall receive a powder coating process after galvanizing. Galvanized surfaces shall be prepared in accordance with Subsection 807.87 and the Manufacturer's recommendations prior to application of the powder coating process.

The powder coating process shall be a two coat system applied using electrostatic spray. The base coat shall be a thermosetting epoxy powder with a minimum thickness of 2 to 4 mils. The top coat shall be a tough polyester powder with a minimum thickness of 2 to 4 mils. The color shall be as shown in the plans. Coated galvanized framework shall have a salt spray resistance of 3,000 hours using ASTM B117 without loss of adhesion. The powder coating process shall be in accordance with Manufacturer's recommendations. Any damage to the powder coated finish shall be repaired with a compatible touch-up system in accordance with the Manufacturer's recommendations and to the satisfaction of the Engineer at the Contractor's expense.

Cast-in-place anchor bolts, nuts, washers, and set screws shall be galvanized high-strength steel or stainless steel. Mixing of galvanized and stainless steel fasteners will not be permitted.

High-Strength Steel:
Cast-in-place anchor bolts shall conform to ASTM F3125, Grade A325, Type 1.
Nuts shall conform to ASTM A563, Grade DH or AASHTO M 292, Grade 2H.
Washers shall conform to ASTM F436.
Plate Washers shall conform to ASTM A709, Grade 36.
Template Plates shall conform to ASTM A709, Grade 36.
Splice Set Screws shall conform to ASTM A307, Grade A.
Anchor bolts, nuts, washers, plate washers, and set screws shall be galvanized in accordance with AASHTO M 232, Class C or ASTM B695, Class 50.

Stainless Steel:
Cast-in-place anchor bolts shall conform to ASTM A193, Grade B8, Class 2 or A320, Grade B8, Class 2 with a minimum yield strength of 80,000 psi.
Nuts shall conform to ASTM A194, Grade 8.
Washers shall conform to ASTM A240, Type 302.
Plate Washers shall conform to ASTM A240, Type 302.
Template Plates shall conform to ASTM A240, Type 302.
Splice Set Screws shall conform to ASTM A193, Grade B8, Class 1 or A320, Grade B8, Class 1.

Threads on bolts, screws, and nuts shall conform to American Standard Coarse Series, Class 2 FIT, ASA Specification B1.1. Plate washers shall have dimensions meeting the requirements of ANSI/ASME B18.22.1, Type A plain washer (Wide Series) unless otherwise noted. Neoprene pads shall conform to the requirements of Subsection 807.15 (b).

STATE OF ARKANSAS
LICENSED PROFESSIONAL ENGINEER
No.14498
ADAM B. HALL

DIGITALLY SIGNED 6/30/2023
BRIDGE ENGINEER

SHEET 6 OF 6
DETAILS OF 220'-0" CONTINUOUS PLATE GIRDER UNIT
HIGHWAY 31 OVER I-40

ROUTE SEC.

ARKANSAS STATE HIGHWAY COMMISSION
LITTLE ROCK, ARK.

DRAWN BY:	HEW	DATE:	FEB. 2022	FILENAME:	b061613x1_s6.dgn
CHECKED BY:	ABH	DATE:	MAR. 2022	SCALE:	As Shown
DESIGNED BY:	RAK	DATE:	FEB. 2022		

BRIDGE NO. 07605 DRAWING NO. 65940

abhall 6/29/2023 1:37:19 PM
WORKSPACE:ARDOT Bridge (2019)
L:\2021\21T01028 - ARDOT 061613 I-40 Strs and Apprs\Drawings\b061613x1_S406_MD.dgn
REVISED DATE:

DATE REVISED	DATE FILMED	DATE REVISED	DATE FILMED	FED. ROAD DIST. NO.	STATE	FED. AID PROJ. NO.	SHEET NO.	TOTAL SHEETS
				6	ARK.			
				JOB NO.		061613	132	215
				①	07606 -	LAYOUT	- 65941	

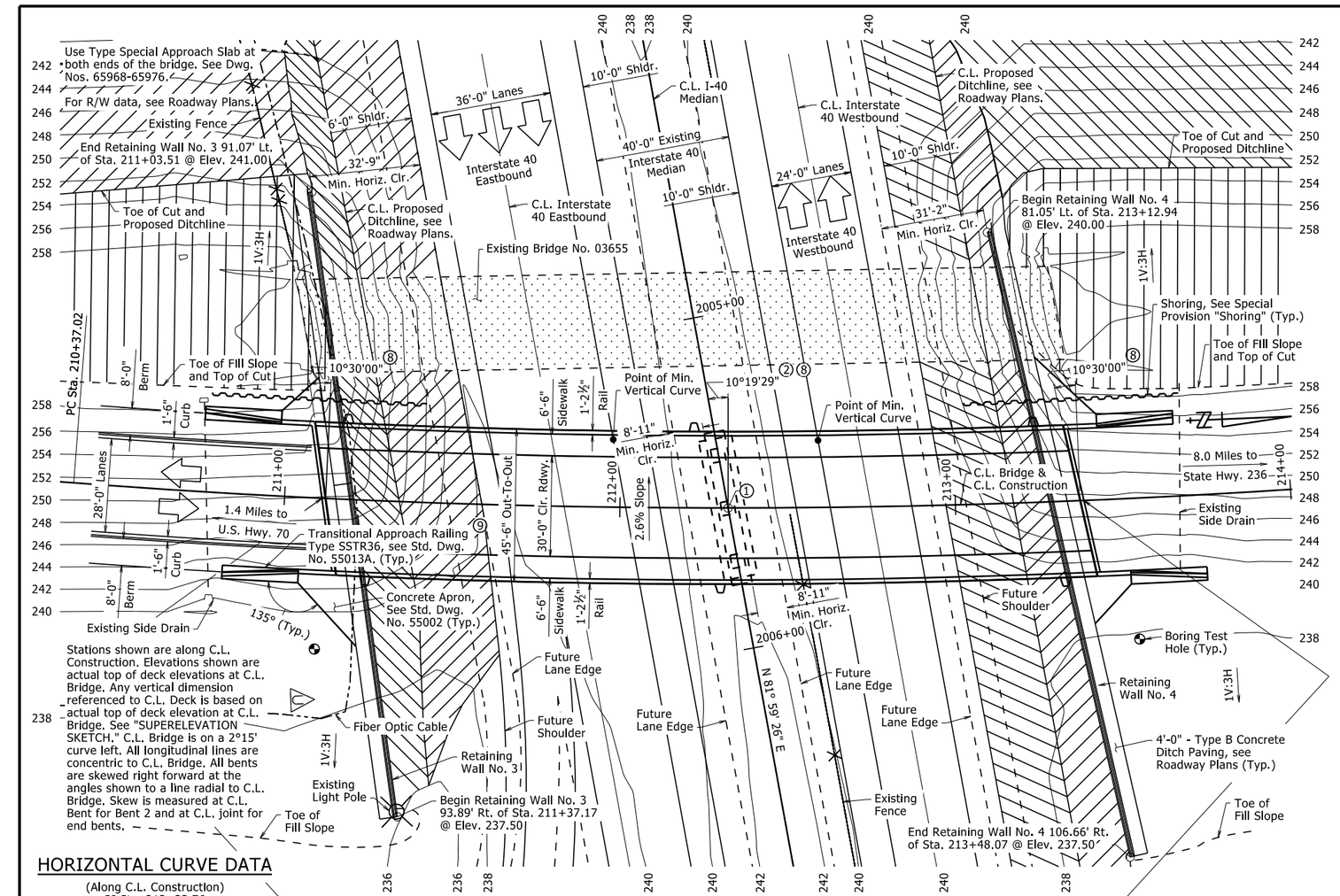

PLAN

For details of Excavation and Retaining Walls, see Dwg. Nos. 65968-65976.

① Sta. 212+32.23 C.L. Construction = 2005+57.57 C.L. Median Interstate 40

② Angle measured between C.L. Median I-40 and local radial line to C.L. Const. at Sta. 212+32.23

⑧ Skew angle

⑨ An architectural finish shall be applied to the transitional approach railings in accordance with SP "Architectural Finish" and shall match the limits of architectural finish on the adjacent end bent wing rail. No direct payment will be made for this work, and architectural finish on the transitional approach railings shall be considered incidental to the unit price bid for "Transitional Approach Railing".

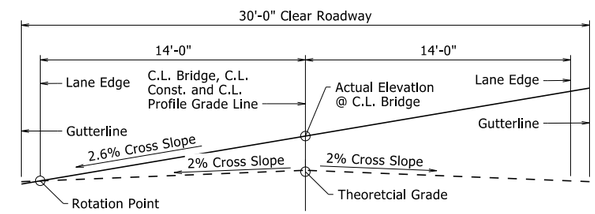

SUPERELEVATION SKETCH

Looking Ahead
No Scale

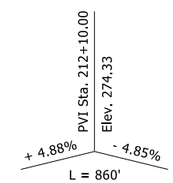

VERTICAL CURVE

Theoretical Grade Along C.L. Construction (Not to Scale)

HORIZONTAL CURVE DATA

(Along C.L. Construction)
PI Sta. 213+33.76
Δ = 13°17'36" Lt.
D = 2°15'00"
T = 296.74'
L = 590.82'
R = 2546.48'
P.C. Sta. 210+37.02
P.T. Sta. 216+27.84

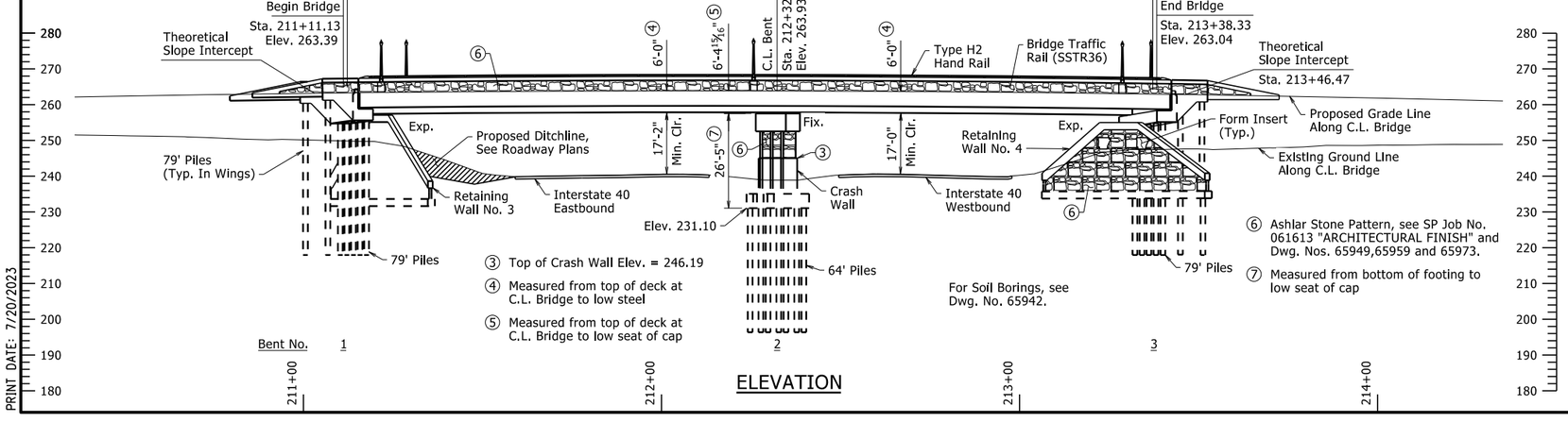

③ Top of Crash Wall Elev. = 246.19

④ Measured from top of deck at C.L. Bridge to low steel

⑤ Measured from top of deck at C.L. Bridge to low seat of cap

⑥ Ashlar Stone Pattern, see SP Job No. 061613 "ARCHITECTURAL FINISH" and Dwg. Nos. 65949,65959 and 65973.

⑦ Measured from bottom of footing to low seat of cap

For Soil Borings, see Dwg. No. 65942.

ELEVATION

PRINT DATE: 7/20/2023

STATE OF ARKANSAS
Jul 20 2023 10:17 AM
LICENSED PROFESSIONAL ENGINEER
No. 9235
CHARLES R. ELLIS
BRIDGE ENGINEER

SHEET 1 OF 2
LAYOUT OF BRIDGE
HIGHWAY 13 OVER INTERSTATE 40
I-40 STRS. & APPRS. (HWYS. 13 & 31)
(CARLISLE & LONOKE) (S)
LONOKE COUNTY

ROUTE 13 SEC. 10

ARKANSAS STATE HIGHWAY COMMISSION

LITTLE ROCK, ARK.

DRAWN BY:	DKS	DATE:	06/2021	FILENAME:	b061613x2_l1.dgn
CHECKED BY:	JSQ	DATE:	9/23/2021	SCALE:	1" = 20'
DESIGNED BY:	DKS	DATE:	06/2021		

BRIDGE NO. 07606 DRAWING NO. 65941

DATE REVISED	DATE FILMED	DATE REVISED	DATE FILMED	FED. ROAD DIST. NO.	STATE	FED. AID PROJ. NO.	SHEET NO.	TOTAL SHEETS
				6	ARK.			
				JOB NO.		061613	133	215
				07606 - LAYOUT - 65942				

"N" VALUES

Sta. 211+11 - 45' Right of C.L. Construction

0.5- 1.5,N=17
3.0- 4.0,N=9
8.0- 9.0,N=16
12.5- 13.5,N=14
15.5- 16.5,N=13
20.5- 21.5,N=14
25.5- 26.5,N=11
30.5- 31.5,N=12
35.5- 36.5,N=8
40.5- 41.5,N=12
45.5- 46.5,N=8
50.5- 51.5,N=9
55.5- 56.5,N=13
60.5- 61.5,N=12
65.5- 66.5,N=28
70.5- 71.5,N=11
75.5- 76.5,N=9
80.5- 81.5,N=1
85.5- 86.5,N=0
90.5- 91.5,N=1
95.5- 96.5,N=12
100.5-101.5,N=32
105.0-105.4,N=40(5")
110.5-110.5,N=50(6")
115.5-116.5,N=85
120.5-121.5,N=118

Sta. 213+53 - 42' Right of Construction Centerline

0.5- 1.5,N=22
3.0- 4.0,N=18
7.5- 8.5,N=19
12.0- 13.0,N=14
15.5- 16.5,N=12
20.5- 21.5,N=17
25.5- 26.5,N=18
30.5- 31.5,N=13
35.5- 36.5,N=4
40.5- 41.5,N=7
45.5- 46.5,N=3
50.5- 51.5,N=8
55.5- 56.5,N=11
60.5- 61.5,N=13
65.5- 66.5,N=8
70.5- 71.5,N=4
75.5- 76.5,N=8
80.5- 81.5,N=0
85.5- 86.5,N=0
90.5- 91.5,N=1
95.5- 96.5,N=90
100.5-101.5,N=29
105.5-106.5,N=64
110.0-110.4,N=30(5")
115.5-116.5,N=114
120.5-121.5,N=71

BORING LEGEND

A1-Moist, Medium Dense, Brown Silt
B1-Moist, Loose, Brown Silt
C1-Moist, Brown Lean Clay
D1-Moist, Very Stiff, Brown Lean Clay
E1-Moist, Brown Silt
F1-Moist, Stiff, Gray Lean Clay
G1-Moist, Stiff, Gray Silty Clay
H1-Moist, Stiff, Brown Lean Clay
J1-Moist, Medium Stiff, Brown Silty Clay
K1-Moist, Stiff, Brown Clay
L1-Moist, Medium Stiff, Brown Clay
M1-Moist, Very Stiff, Brown Clay
N1-Moist, Stiff, Brown Silty Clay with Sand and Traces of Gravel
P1-Moist, Stiff, Brown Clay with Sand
Q1-Moist, Very Soft, Brown Clay
R1-Moist, Medium Dense, Light Gray Clayey Sand with Gravel
S1-Moist, Dense, Brown Silt with Sand and Trace Gravel
T1-Moist, Very Dense, Brown Sand
U1-Moist, Very Dense, Brown Sand with Traces of Gravel
V1-Moist, Very Dense, Brown Sand and Gravel
W1-Moist, Very Stiff, Brown Silty Clay
X1-Moist, Medium Dense, Gray Silt
Y1-Moist, Brown Sandy Lean Clay
Z1-Moist, Medium Dense, Brown Sandy Silt
A2-Moist, Medium Dense, Brown Silt with Fine Sand
B2-Moist, Medium Dense, Brown Silty Sand
C2-Moist, Soft, Reddish Brown Lean Clay
D2-Moist, Medium Stiff, Reddish Brown Lean Clay
E2-Moist, Soft, Reddish Brown Silty Clay
F2-Moist, Medium Stiff, Reddish Brown Clay
G2-Moist, Medium Dense, Reddish Brown Silt
H2-Moist, Stiff, Reddish Brown Silty Clay
J2-Moist, Medium Stiff, Brown Lean Clay
K2-Moist, Soft, Brown Silty Clay
L2-Moist, Loose, Reddish Brown Silt
M2-Moist, Very Soft, Reddish Brown Lean Clay
N2-Moist, Very Soft, Reddish Brown Fat Clay
P2-Moist, Very Dense, Reddish Brown Silt
Q2-Moist, Very Dense, Gray Silty Fine Sand with Gravel
R2-Moist, Medium Dense, Gray Silty Fine Sand with Gravel
S2-Moist, Very Dense, Gray Silty Fine Sand with Traces of Gravel
T2-Moist, Very Dense, Gray Poorly Graded Fine Sand with Silt and Some of Gravel

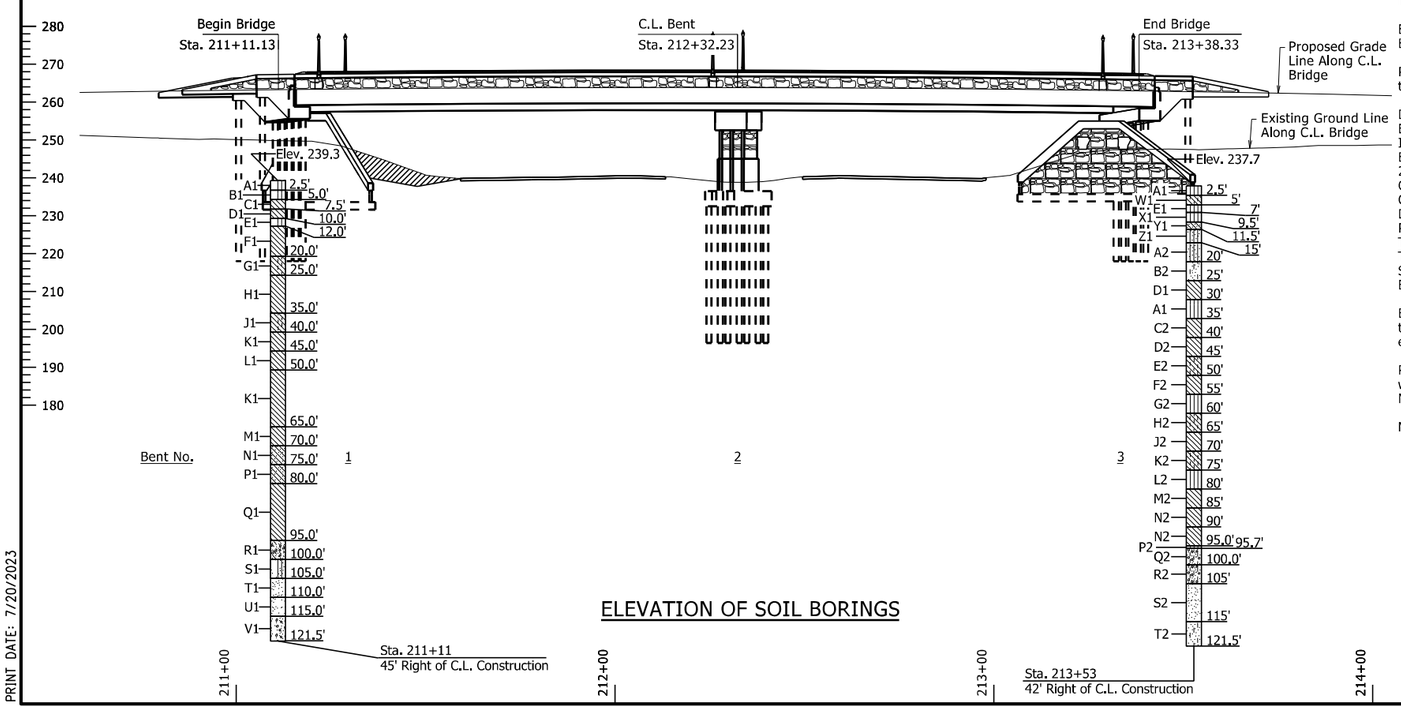

ELEVATION OF SOIL BORINGS

GENERAL NOTES

BENCHMARK: Vertical Control Data are shown on the Survey Control Data Sheets.

CONSTRUCTION SPECIFICATIONS: Arkansas State Highway and Transportation Department Standard Specifications for Highway Construction (2014 edition) with applicable Supplemental Specifications and Special Provisions. Section and Subsection refer to the Standard Construction Specifications unless otherwise noted in the Plans.

DESIGN SPECIFICATIONS: AASHTO LRFD Bridge Design Specifications, Eighth Edition (2017).

LIVE LOADING: HL-93

SEISMIC ZONE: 3 SD1: 0.378 SITE CLASS: E

SEISMIC OPERATIONAL CLASSIFICATION: Essential

MATERIALS AND STRENGTHS:

Class S(AE) Concrete (superstructure)	f'c = 4,000 psi
Class S Concrete (substructure)	f'c = 3,500 psi
Reinforcing Steel (AASHTO M 31 or M 322, Type A)	fy = 60,000 psi
Structural Steel (ASTM A709, Gr. 50)	Fy = 50,000 psi
Structural Steel (ASTM A709, Gr. 36)	Fy = 36,000 psi

BORING LOGS: Boring logs may be obtained from the Construction Contract Development Section of the Program Management Division.

STEEL SHELL PILING: Piling in Bents 1 and 3 shall be 18" diameter concrete filled steel shell piles and shall be driven to a minimum ultimate bearing capacity of 211 tons per pile. Piling in Bent 2 shall be 18" diameter concrete filled steel shell piles and shall be driven to a minimum ultimate bearing capacity of 226 tons per pile. All piling shall be driven with an approved air, steam, or diesel hammer to a minimum tip elevation of 218.0 or lower at Bents 1 and 3 and to a minimum tip elevation of 196.4 or lower at Bent 2. Piling in end bents shall be driven after embankment to bottom of cap is in place. Lengths of piling shown are assumed for estimating quantities only. Actual lengths are to be determined in the field. No additional payment will be made for cut-off or build-up. Test piles are not required but may be driven for the Contractor's information in accordance with Subsection 805.08(g). No piles will be paid for as test piles.

DRIVING SYSTEM: The driving system approval and the ultimate bearing capacity determination for piling shall be based on the requirements of Subsection 805.09(b), "Method B Wave Equation Analysis (WEAP)". It is estimated that the minimum rated hammer energy required to obtain the ultimate bearing capacity for all piles in Bents 1 and 2 will be 50,000 foot pounds per blow and Bent 3 will be 40,000 foot pounds per blow.

PILE CASINGS: Pile casings are required for piling within retaining walls at end bents. Casings shall be installed prior to or during the embankment construction and shall extend from top of leveling pad to bottom of cap. Pile casing material shall be of sufficient strength to retain its original form free from harmful distortions after compaction of the fill material surrounding it. The minimum inside diameter of the casing shall be at least 4" greater than the outside diameter of the steel shell pile. Piles shall be driven throught the open casings after embankment to bottom of cap is in place. After driving is comprete, the pile casins shall be filled with Class S Concrete, an approved non-shrink grout, mixture used for Portland Cement Concrete Pavement, or other approved material in a single continuous operation to completely fill voids. Pile casings and concrete will not be paid for directly but shall be considered subsidiary to the item "Steel Shell Piling (18" Dia.)".

PILE FOOTINGS: The top of the footings at Bent 2 shall be set a minimum of 2.0' below natural ground or at the elevations shown on the plans, whichever is lower. Foundations for footings shall be prepared in accordance with Subsection 801.04. Foundation piles shall not be driven until after the excavation to bottom of footing is complete. Excavations shall be backfilled and compacted to the level of the existing ground in accordance with Subsection 801.08.

PAINTING: All Grade 50 structural steel, except galvanized members and surfaces in contact with concrete, shall be painted as specified in Subsection 807.75. The color of paint shall be Dark Brown and shall match Federal Standard 595B, Color Chip No. 20108.

POWDER COATING: All metal bridge railing shall receive a powder coating finish. The color of paint shall be Dark Brown equal or close to Federal Std. 595B, Color Chip No. 20108 and as approved by the Engineer. See Std. Dwg. No. 55015 for additional information.

TEXTURED COATING FINISH: Class 3 Textured Coating Finish shall be applied to bridge and retaining wall surfaces as specified in Special Provision "Textured Coating Finish" and in accordance with Subsection 802.19(b)(3). Textured Coating Finish shall not be applied on surfaces where Class 2 Protective Surface Treatment is applied.

BRIDGE DECK: The concrete bridge deck, except sidewalks, shall be given a tine finish as specified for final finishing in Subsection 802.19 for Class 5 Tined Bridge Roadway Surface Finish. Sidewalks shall be given a Class 6 Broomed Finish.

PROTECTIVE SURFACE TREATMENT: Class 2 Protective Surface Treatment shall be applied to the roadway surface, sidewalk surface (including curbing), and to the roadway face and top of the concrete bridge rails in accordance with Section 803.

DETAIL DRAWINGS:	DRAWING NO(S).
End Bents	65943-65947
Intermediate Bents	65948-65950
Elastomeric Bearings	65951
225' Continuous Plate Girder Unit	65952-65958
Common Superstructure Details	65959-65960
General Notes For Steel Bridge Structures	55006
Details For Steel Bridge Structures	55007
Poured Silicone Joints	55008
Transitional Approach Railing	55013A
Type H2 Railing	55015
Steel Shell Piling	55021
Bridge Traffic Rail	55070

EXISTING BRIDGE: Existing Bridge No. 03655 (Log Mile 1.41) is 33.7' wide (27.9' clear roadway) and 224' long and consists of steel I-beam spans (4 spans total) supported by concrete columns on concrete pile footings. The existing bridge is located approximately 60' west from the proposed new bridge. Plans of the existing structure, if available, may be obtained upon request to the Construction Contract Development Section of the Program Management Division.

REMOVAL AND SALVAGE: After the new bridge is open to traffic, the Contractor shall remove existing Bridge No. 03655, including concrete riprap, in accordance with Section 205. Removal of concrete riprap will not be paid for directly but shall be considered subsidiary to the item "Removal of Existing Bridge Structure (Site No. _)". All material from the existing bridge shall become the property of the Contractor.

MAINTENANCE OF TRAFFIC: See Roadway Plans.

STATE OF ARKANSAS
Ellis, Rick
Jul 20 2023 10:17 AM
LICENSED PROFESSIONAL ENGINEER
No. 9235
CHARLES R. ELLIS
BRIDGE ENGINEER

SHEET 2 OF 2
LAYOUT OF BRIDGE
HIGHWAY 13 OVER INTERSTATE 40
I-40 STRS. & APPRS. (HWYS. 13 & 31)
(CARLISLE & LONOKE) (S)
LONOKE COUNTY

ROUTE 13 SEC. 10

ARKANSAS STATE HIGHWAY COMMISSION

LITTLE ROCK, ARK.

DRAWN BY:	DKS	DATE:	06/2021	FILENAME:	b061613x2_l1.dgn
CHECKED BY:	JSQ	DATE:	9/23/2021	SCALE:	1" = 20'
DESIGNED BY:	DKS	DATE:	06/2021		

BRIDGE NO. 07606 DRAWING NO. 65942

PRINT DATE: 7/20/2023

DATE REVISED	DATE FILMED	DATE REVISED	DATE FILMED	FED. ROAD DIST. NO.	STATE	FED. AID PROJ. NO.	SHEET NO.	TOTAL SHEETS
				6	ARK.			
				JOB NO.		061613	134	215
				07606		END BENTS		65943

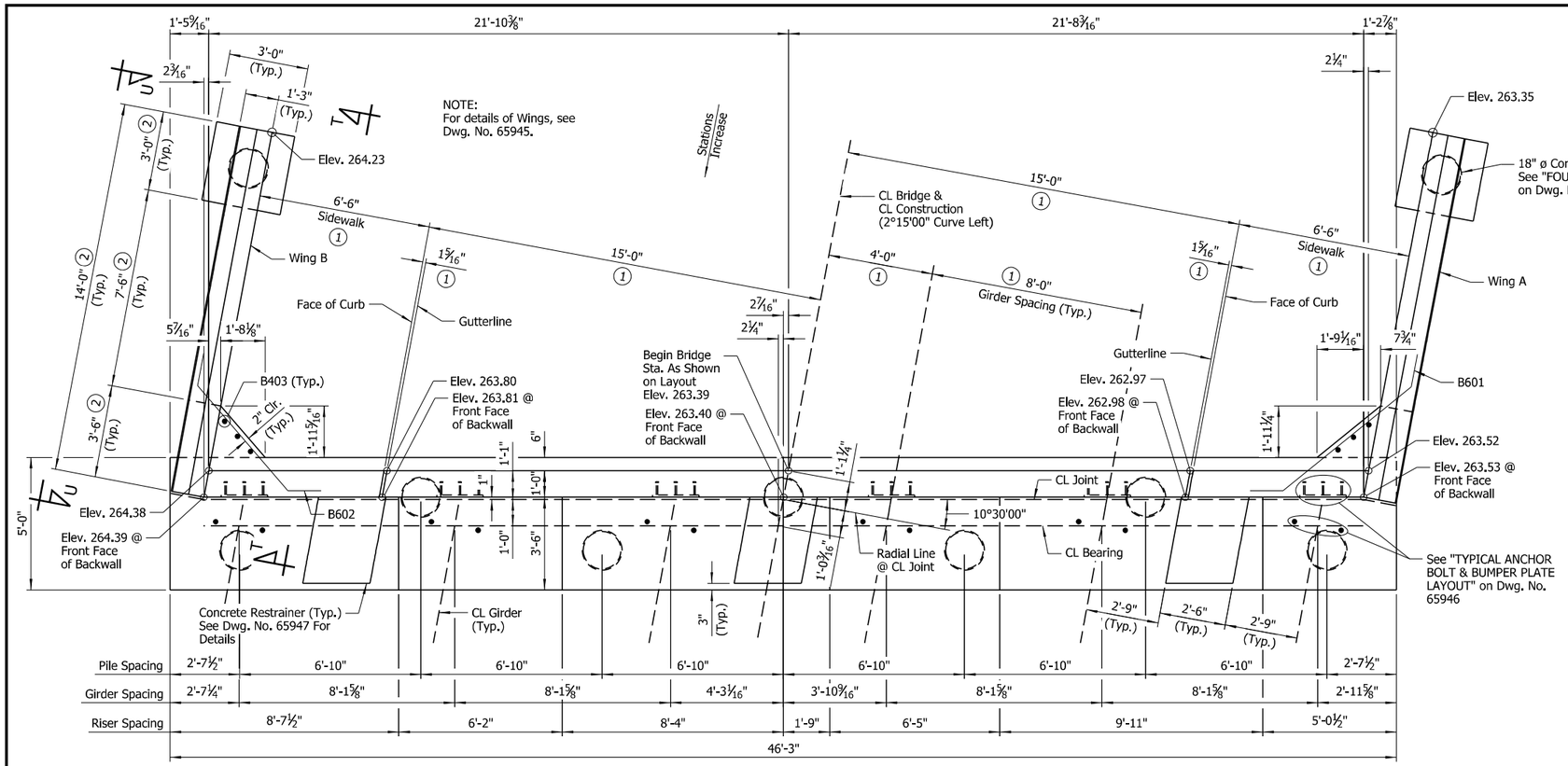

PLAN - END BENT NO. 1

Scale: ⅜" = 1'-0"

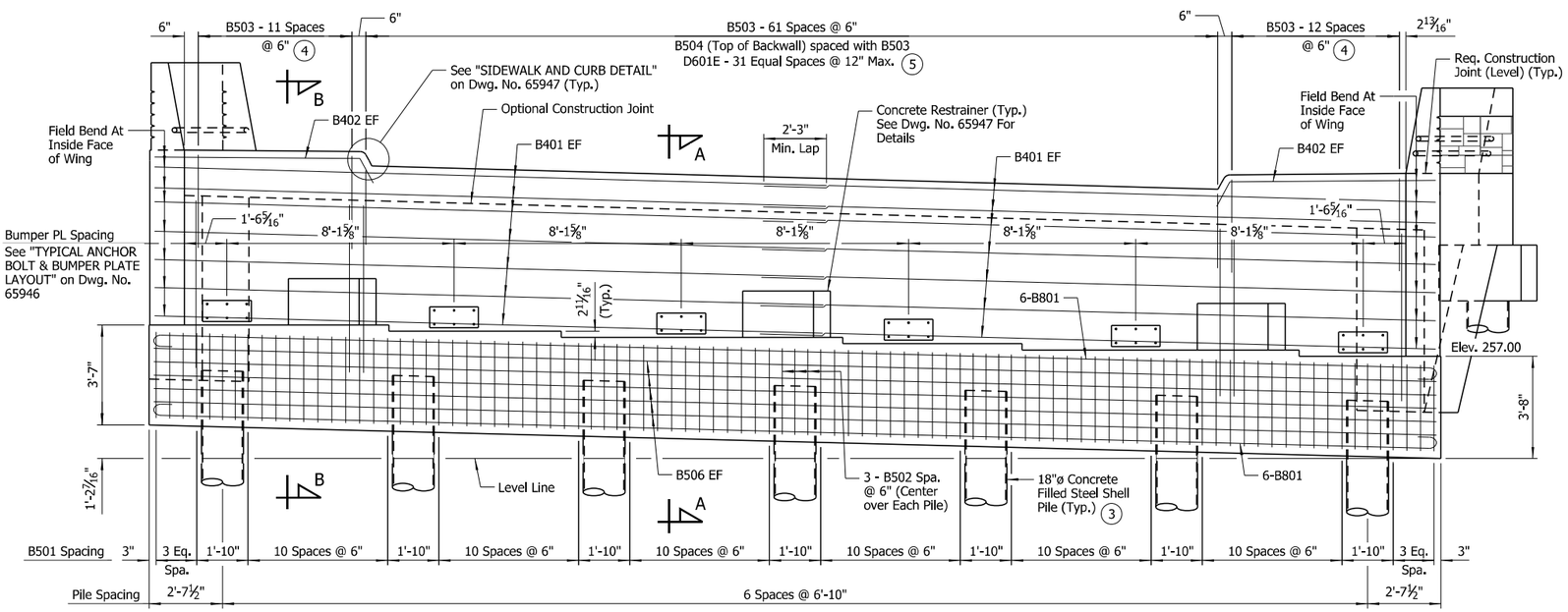

ELEVATION - END BENT NO. 1

(Looking Back)
Scale: ⅜" = 1'-0"

(1) Measured Radially

(2) Measured Along Inside Face of Wing

(3) See Std. Dwg. No. 55021 for details of piles and pile anchorage. Pile anchorage shall be placed to minimize interference with anchor bolts and reinforcing in cap.

(4) B505 (Top of Backwall) spaced with B503

(5) Horizontal leg of D601E shall be placed parallel to CL Bridge.

GENERAL NOTES

Finish top of backwall to match the bridge deck.

Structural steel in end bents shall be ASTM A709, Gr. 50 and shall be paid for as "STRUCTURAL STEEL IN PLATE GIRDER SPANS (A709, GR. 50)".

See Standard Drawing No. 55006 for additional notes.

For additional information, see Layout.

NOTES:
CL Construction is on a 2°15'00" curve left.

All longitudinal lines are on curves concentric with CL Bridge.

For "BAR LIST (END BENT NO. 1)" & "BAR BENDING DIAGRAMS", see Dwg. No. 65947.

For "SECTION A-A", "SECTION B-B", "END BENT WALL ARMOR DETAIL" & "FOUNDATION PLAN - END BENT NO. 1", see Dwg. No. 65946.

For "VIEW T-T" and "VIEW U-U", see Dwg. No. 65945.

Class 2 Protective Surface Treatment shall be applied to the top of the backwall (including sidewalks and curbing) and to the roadway face and top of the wing rails.

Class 3 Textured Coating Finish shall be applied to bridge surfaces as specified in Special Provision "TEXTURED COATING FINISH" and in accordance with Subsection 802.19(b)(3). Textured Coating Finish shall not be applied on surfaces where Class 2 Protective Surface Treatment is applied.

LEGEND

EF = Each Face

NOTE:
No portion of the backwall shall be poured until the girders are in place. The portion of the backwall above the optional construction joint at the paving bracket shall not be placed until the adjacent deck pour has been made. See Std. Dwg. No. 55008, "EXPANSION DEVICE INSTALLATION AT END BENTS", for additional information.

No heavy construction equipment shall be allowed within 10' of the backwall until the deck concrete placement for the adjacent span has been completed unless MSE strap reinforcing has been designed to accommodate these loads. See "END BENT STRAP DETAIL" on Dwg. No. 65946.

STATE OF ARKANSAS
LICENSED PROFESSIONAL ENGINEER
No.14498
ADAM B. HALL

DIGITALLY SIGNED 6/30/2023
BRIDGE ENGINEER

SHEET 1 OF 5
DETAILS OF END BENTS
HIGHWAY 13 OVER I-40

ROUTE SEC.

ARKANSAS STATE HIGHWAY COMMISSION

LITTLE ROCK, ARK.

DRAWN BY: HEW DATE: MAR. 2022 FILENAME: b061613x2_a1.dgn
CHECKED BY: ABH DATE: NOV. 2022 SCALE: As Shown
DESIGNED BY: JME DATE: MAR. 2022
BRIDGE NO. 07606 DRAWING NO. 65943

6/29/2023 1:37:21 PM
abhall
WORKSPACE:ardot Bridge (2019)
L:\2021\21T01028 - ARDOT 061613 I-40 Strs and Apprs\Drawings\b061613x2_S201_AB.dgn
REVISED DATE:

DATE REVISED	DATE FILMED	DATE REVISED	DATE FILMED	FED. ROAD DIST. NO.	STATE	FED. AID PROJ. NO.	SHEET NO.	TOTAL SHEETS
				6	ARK.			
				JOB NO.		061613	135	215
				07606		END BENTS		65944

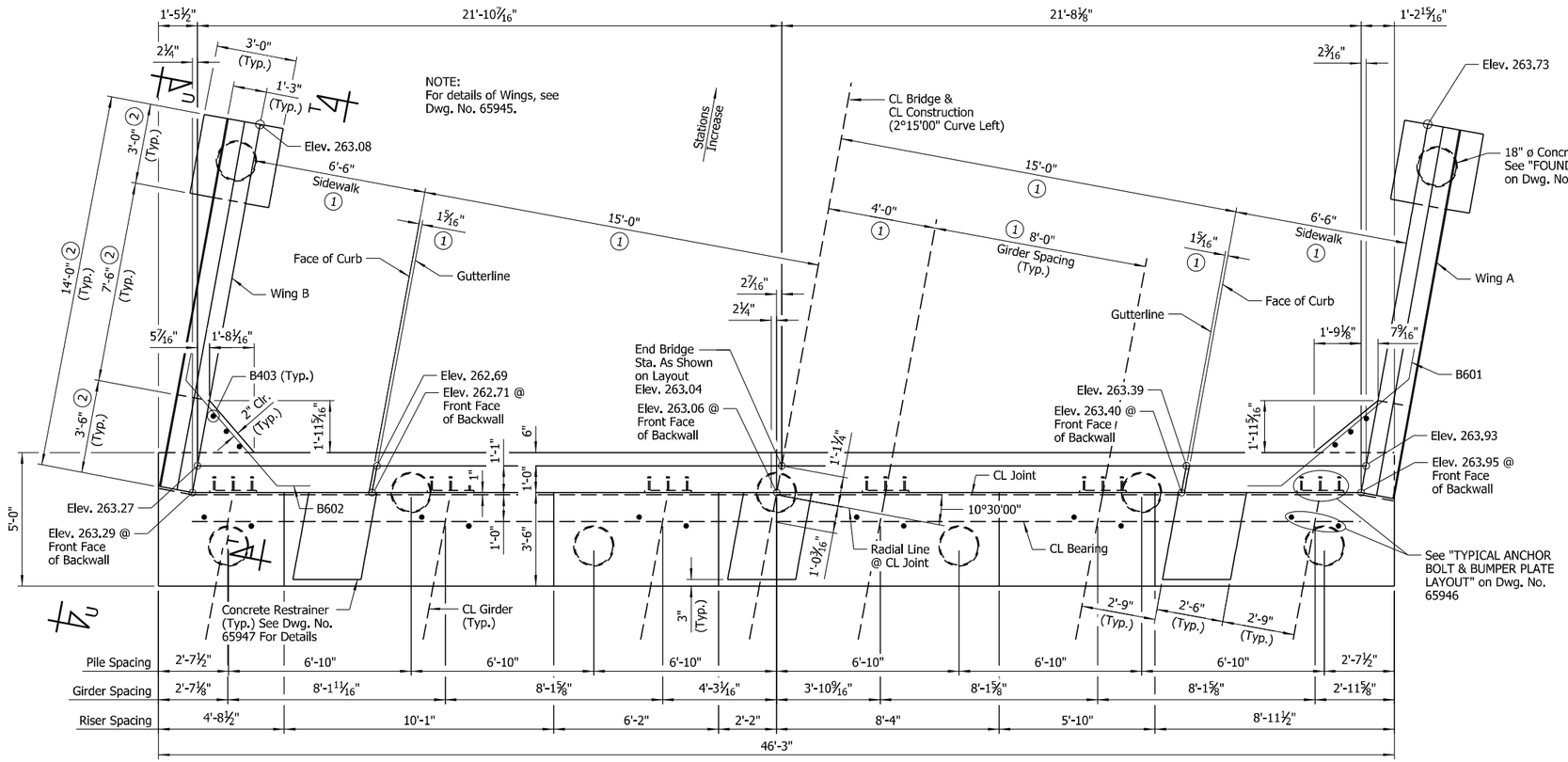

PLAN - END BENT NO. 3

Scale: ⅜" = 1'-0"

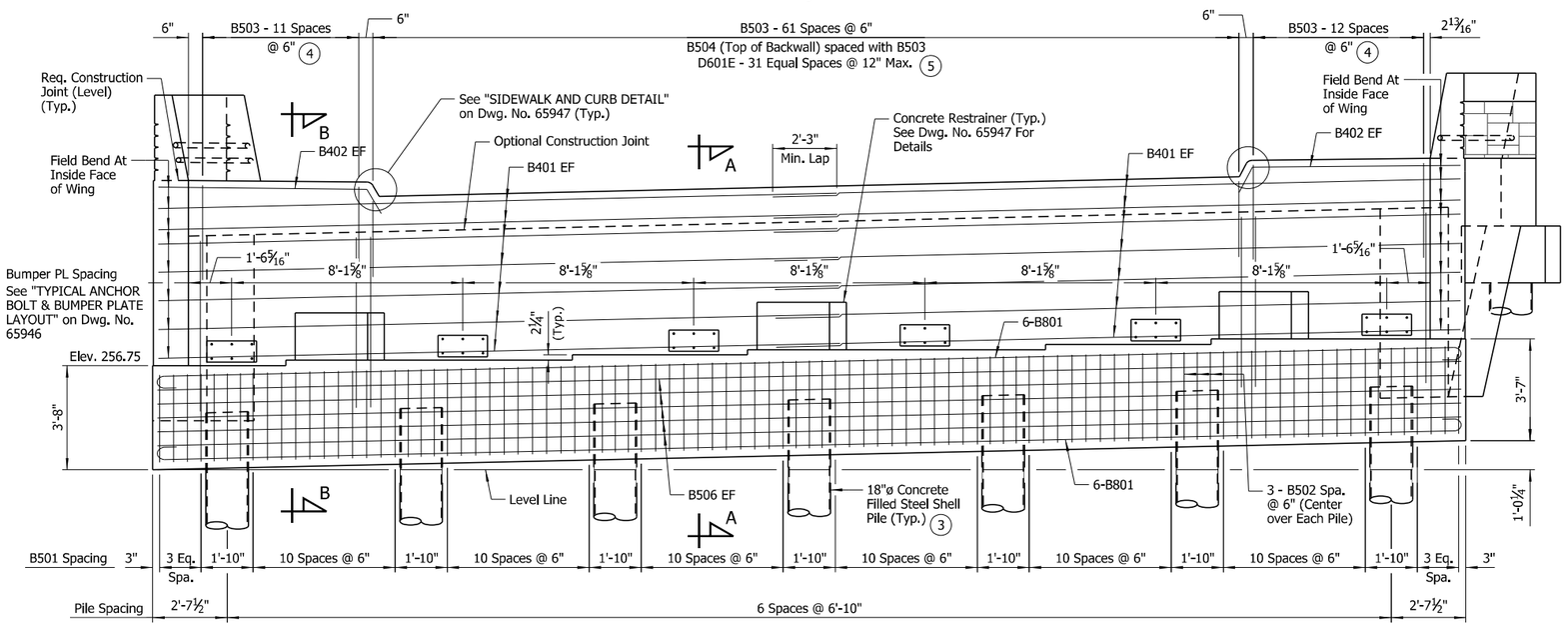

ELEVATION - END BENT NO. 3

(Looking Forward)
Scale: ⅜" = 1'-0"

LEGEND

EF = Each Face

(1) Measured Radially

(2) Measured Along Inside Face of Wing

(3) See Std. Dwg. No. 55021 for details of piles and pile anchorage. Pile anchorage shall be placed to minimize interference with anchor bolts and reinforcing in cap.

(4) B505 (Top of Backwall) spaced with B503

(5) Horizontal leg of D601E shall be placed parallel to CL Bridge.

NOTES:
For End Bent "GENERAL NOTES", see Dwg. No. 65943.

CL Construction is on a 2°15'00" curve left.

All longitudinal lines are on curves concentric with CL Bridge.

For "BAR LIST (END BENT NO. 3)" & "BAR BENDING DIAGRAMS", see Dwg. No. 65947.

For "SECTION A-A", "SECTION B-B", "END BENT WALL ARMOR DETAIL" & "FOUNDATION PLAN - END BENT NO. 3", see Dwg. No. 65946.

For "VIEW T-T" and "VIEW U-U", see Dwg. No. 65945.

Class 2 Protective Surface Treatment shall be applied to the top of the backwall (including sidewalk and curbing) and to the roadway face and top of the wing rails.

Class 3 Textured Coating Finish shall be applied to bridge surfaces as specified in Special Provision "TEXTURED COATING FINISH" and in accordance with Subsection 802.19(b)(3). Textured Coating Finish shall not be applied on surfaces where Class 2 Protective Surface Treatment is applied.

NOTE:
No portion of the backwall shall be poured until the girders are in place. The portion of the backwall above the optional construction joint at the paving bracket shall not be placed until the adjacent deck pour has been made. See Std. Dwg. No. 55008, "EXPANSION DEVICE INSTALLATION AT END BENTS", for additional information.

No heavy construction equipment shall be allowed within 10' of the backwall until the deck concrete placement for the adjacent span has been completed unless MSE strap reinforcing has been designed to accommodate these loads. See "END BENT STRAP DETAIL" on Dwg. No. 65946.

STATE OF ARKANSAS
LICENSED PROFESSIONAL ENGINEER
No.14498
ADAM B. HALL

DIGITALLY SIGNED 6/30/2023
BRIDGE ENGINEER

SHEET 2 OF 5
DETAILS OF END BENTS
HIGHWAY 13 OVER I-40

ROUTE SEC.

ARKANSAS STATE HIGHWAY COMMISSION
LITTLE ROCK, ARK.

DRAWN BY: HEW DATE: MAR. 2022 FILENAME: b061613x2_a2.dgn
CHECKED BY: ABH DATE: NOV. 2022 SCALE: As Shown
DESIGNED BY: JME DATE: MAR. 2022
BRIDGE NO. 07606 DRAWING NO. 65944

6/29/2023 1:37:23 PM
abhall
WORKSPACE(ARDOT Bridge (2019)
L:\2021\21T01028 - ARDOT 061613 I-40 Strs and Apprs\Drawings\b061613x2_S202_AB.dgn
REVISED DATE:

DATE REVISED	DATE FILMED	DATE REVISED	DATE FILMED	FED. ROAD DIST. NO.	STATE	FED. AID PROJ. NO.	SHEET NO.	TOTAL SHEETS
				6	ARK.			
				JOB NO.		061613	136	215
				07606		END BENTS		65945

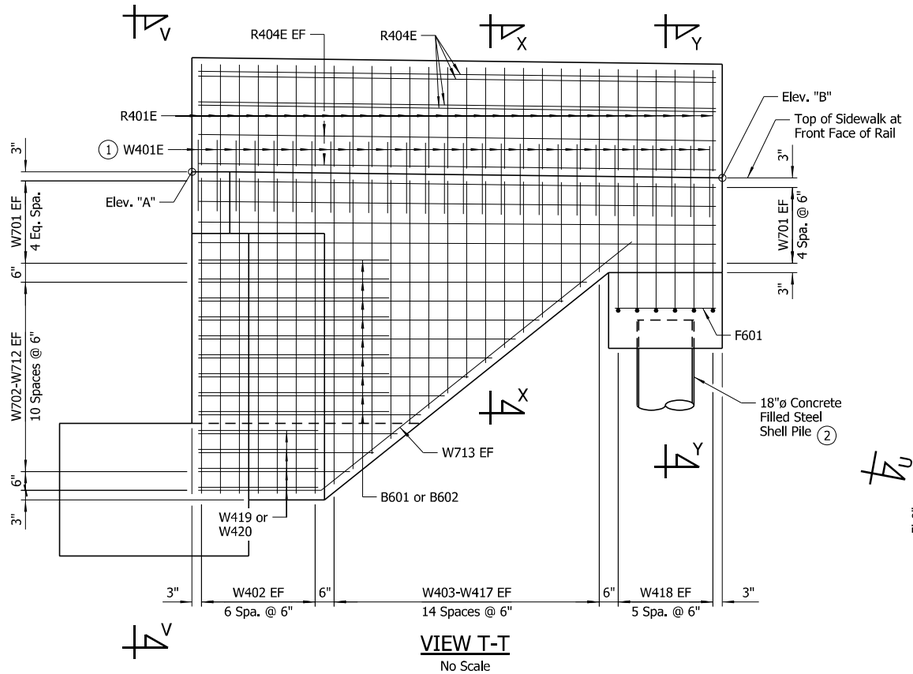

VIEW T-T

No Scale

LEGEND

U.N.O. = Unless Noted Otherwise
EF = Each Face

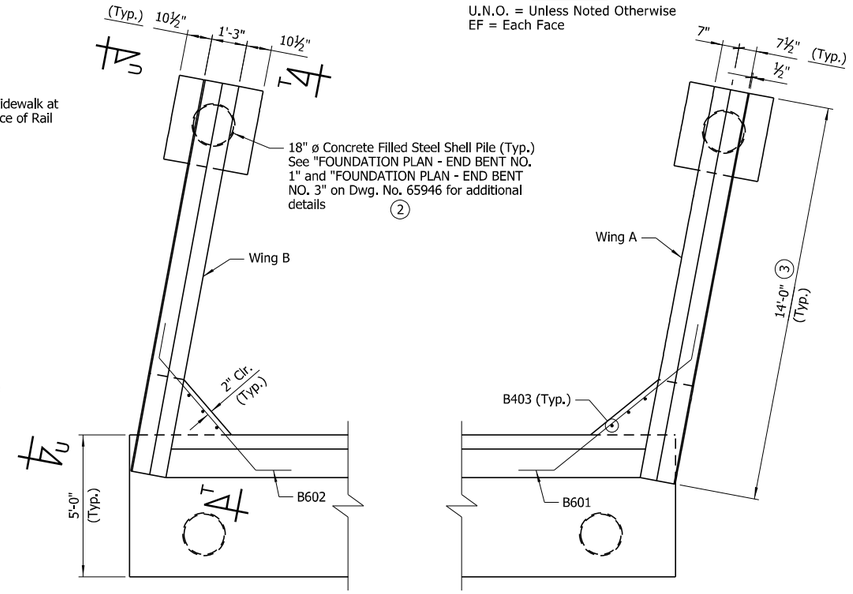

PLAN OF RAIL

Scale: ⅜" = 1'-0"

NOTES:
Form liner shall be a maximum depth of 1½" to provide a minimum clearance of 1½" to rail reinforcing.

See Special Provision "TEXTURED COATING FINISH" for additional information regarding the placement of the Class 3 Textured Coating Finish.

1. See "DETAIL A" for placement of W401E bars.
2. "ALTERNATE PILE ANCHORAGE DETAIL" on Std. Dwg. No. 55021 required to minimize interference with reinforcing in footing.
3. Measured Along Front Face of Rail

NOTES:
For locations of "VIEW T-T" & "VIEW U-U", see Dwg. Nos. 65943 and 65944.

For additional details of the bridge traffic rail on wing, see Std. Dwg. No. 55070.

For "SECTION Z-Z", see Dwg. No. 65947.

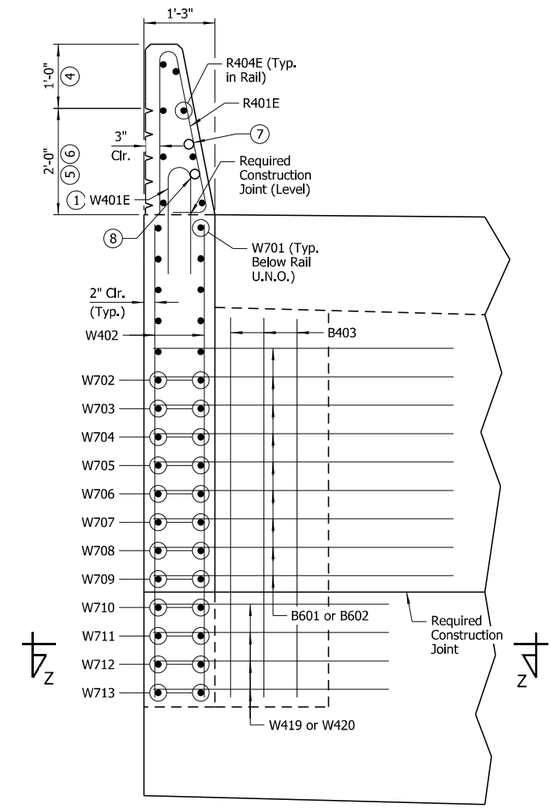

VIEW V-V

Scale: ¾" = 1'-0"

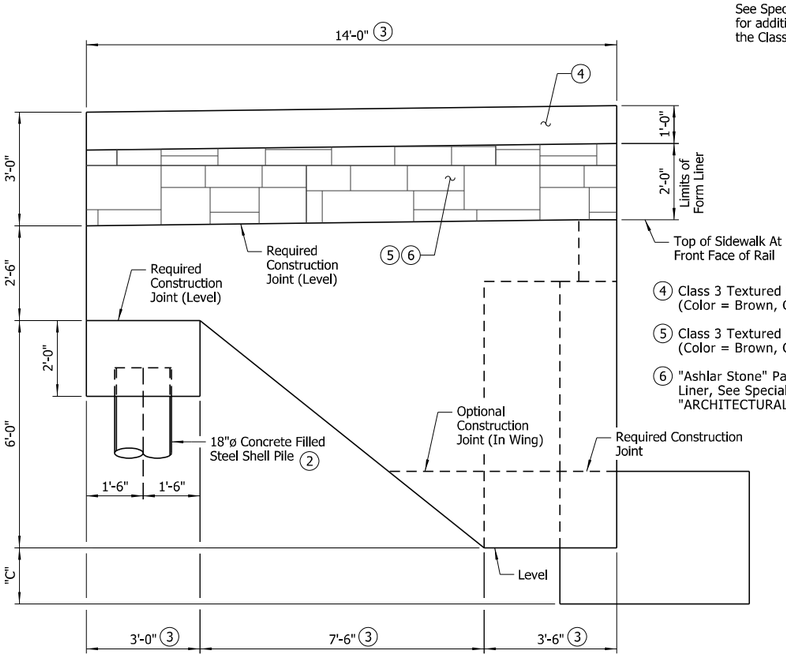

VIEW U-U

No Scale

4. Class 3 Textured Coating Finish (Color = Brown, Color Chip No. 33522)
5. Class 3 Textured Coating Finish (Color = Brown, Color Chip No. 30219)
6. "Ashlar Stone" Pattern Form Liner, See Special Provision "ARCHITECTURAL FINISH".

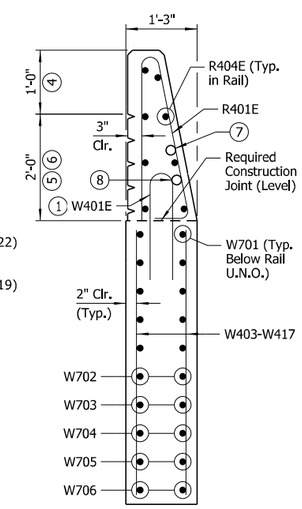

SECTION X-X

Scale: ¾" = 1'-0"

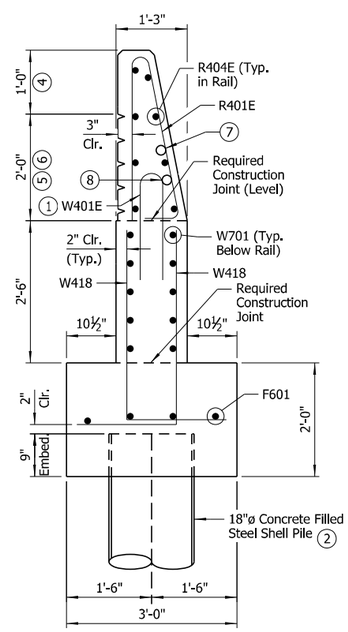

SECTION Y-Y

Scale: ¾" = 1'-0"

7. Additional 2"ø Sch 40 PVC Conduit for Future ITS Fiber (Bent 1, Wing A & Bent 3, Wing B Only)
8. 2"ø Sch 40 PVC Conduit for Future Lighting Installation

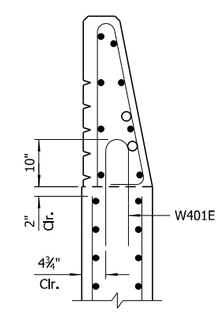

DETAIL A

Scale: ¾" = 1'-0"

TABLE OF VARIABLES				
Bent No.	Location	Elev. "A"	Elev. "B"	"C"
1	Wing A	263.53	263.35	1'-6 3/16"
1	Wing B	264.39	264.23	1'-2 5/16"
3	Wing A	263.95	263.73	1'-1½"
3	Wing B	263.29	263.08	1'-5 15/16"

STATE OF ARKANSAS
LICENSED PROFESSIONAL ENGINEER
No. 14498
ADAM B. HALL

DIGITALLY SIGNED 6/30/2023
BRIDGE ENGINEER

SHEET 3 OF 5
DETAILS OF END BENTS
HIGHWAY 13 OVER I-40

ROUTE SEC.

ARKANSAS STATE HIGHWAY COMMISSION

LITTLE ROCK, ARK.

DRAWN BY: HEW DATE: MAR. 2022 FILENAME: b061613x2_a3.dgn
CHECKED BY: ABH DATE: NOV. 2022 SCALE: As Shown
DESIGNED BY: JME DATE: MAR. 2022
BRIDGE NO. 07606 DRAWING NO. 65945

abhall 6/29/2023 1:37:24 PM
WORKSPACE: ARDOT Bridge (2019)
L:\2021\21T01028 - ARDOT 061613 I-40 Strs and Apprs\Drawings\b061613x2_S203_AB.dgn
REVISED DATE:

DATE REVISED	DATE FILMED	DATE REVISED	DATE FILMED	FED. ROAD DIST. NO.	STATE	FED. AID PROJ. NO.	SHEET NO.	TOTAL SHEETS
				6	ARK.			
				JOB NO.		061613	137	215
				07606		END BENTS		65946

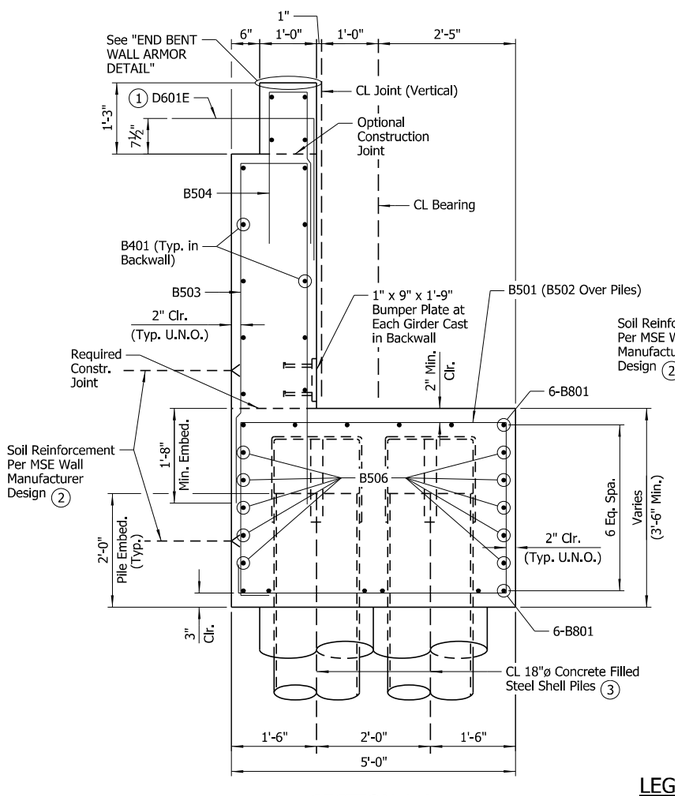

SECTION A-A

Scale: ¾" = 1'-0"

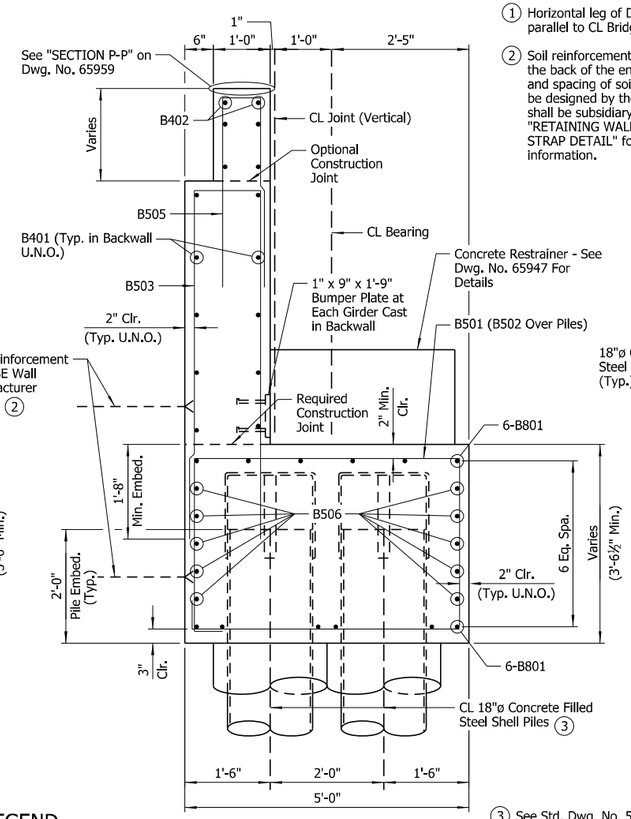

SECTION B-B

Scale: ¾" = 1'-0"

1 Horizontal leg of D601E shall be placed parallel to CL Bridge

2 Soil reinforcement shall be attached at the back of the end bents. Type, size and spacing of soil reinforcement shall be designed by the Contractor. Cost shall be subsidiary to the item "RETAINING WALL". See "END BENT STRAP DETAIL" for additional information.

3 See Std. Dwg. No. 55021 for details of piles and pile anchorage. Pile anchorage shall be placed to minimize interference with anchor bolts and reinforcing in cap.

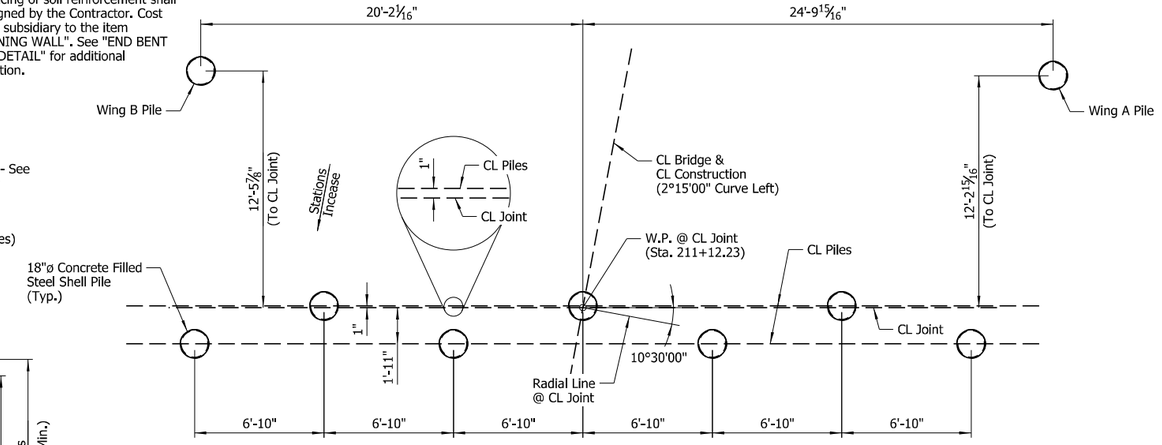

FOUNDATION PLAN - END BENT NO. 1

Scale: ¼" = 1'-0"

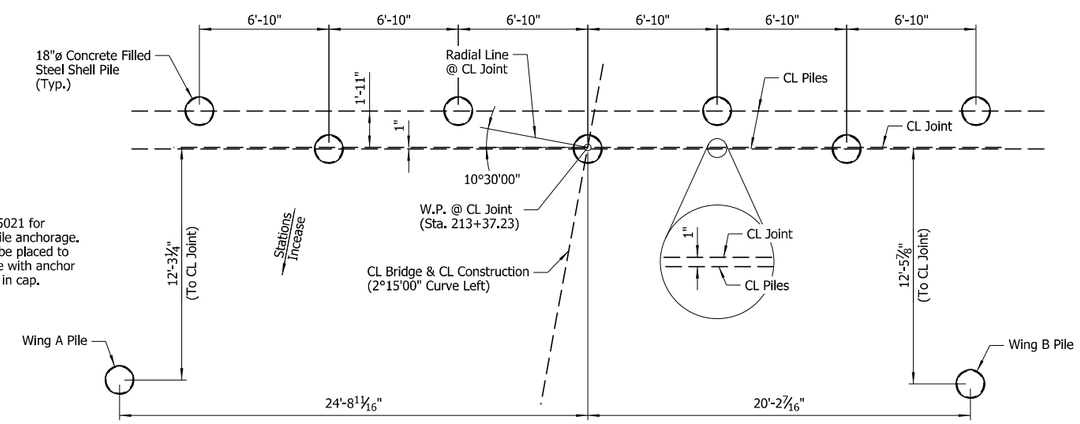

FOUNDATION PLAN - END BENT NO. 3

Scale: ¼" = 1'-0"

LEGEND

U.N.O. = Unless Noted Otherwise
EF = Each Face

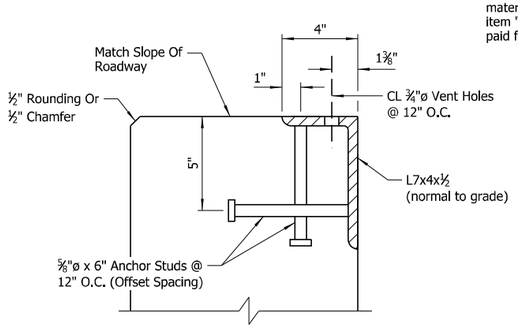

NOTES:
Transverse spacing between vertical anchor studs and vent holes shall be 6".

Concrete shall be hand packed under joint armor.

Special care shall be taken to properly and thoroughly consolidate the concrete in the vicinity of the expansion joint device in the backwall. See Section 802.09(a)(3).

The profile of the backwall angle shall be established based on the vertical curve in conjunction with the skew.

END BENT WALL ARMOR DETAIL

No Scale

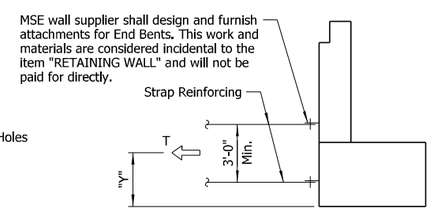

END BENT STRAP DETAIL

No Scale

T = Resultant Force required to be resisted by strap reinforcing

Y = Centroid of Resultant Force

LIMIT STATE	4 T	"Y"
	Kips/Ft.	Ft.
Service	2.9	2.10
Strength	4.0	2.67
Extreme Event	7.8	3.29

4 The provided loads do not include any additional loadings due to heavy construction equipment such as cranes. If the Contractor anticipates bringing heavy construction equipment within 10' of the backwall, they shall coordinate with the MSE wall supplier to design strap reinforcing for the anticipated loadings. Tolerable horizontal backwall movement for all loading combinations is ½" at the Service Limit State. Design computations shall accompany the wall design submittal for review by the Engineer. See Special Provision "RETAINING WALLS" for additional information.

TABLE OF VARIABLES

Girder No.	End Bent No. 1	End Bent No. 3
	"A"	"A"
1	10°33'40"	10°36'26"
2	10°31'38"	10°34'24"
3	10°29'38"	10°32'23"
4	10°27'38"	10°30'22"
5	10°25'39"	10°28'23"
6	10°23'40"	10°26'24"

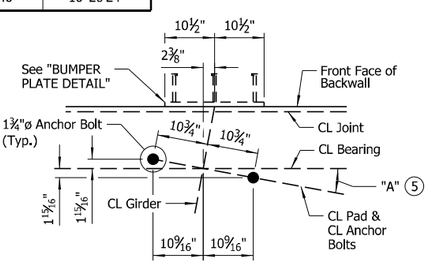

TYPICAL ANCHOR BOLT & BUMPER PLATE LAYOUT

No Scale

NOTE:
For "DETAILS OF ELASTOMERIC BEARINGS", see Dwg. No. 65951.

5 See "TABLE OF VARIABLES"

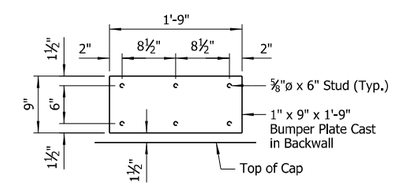

BUMPER PLATE DETAIL

Scale: 1" = 1'-0"

STATE OF ARKANSAS
LICENSED PROFESSIONAL ENGINEER
No.14498
ADAM B. HALL

DIGITALLY SIGNED 6/30/2023
BRIDGE ENGINEER

SHEET 4 OF 5
DETAILS OF END BENTS
HIGHWAY 13 OVER I-40

ROUTE SEC.

ARKANSAS STATE HIGHWAY COMMISSION
LITTLE ROCK, ARK.

DRAWN BY: HEW DATE: MAR. 2022 FILENAME: b061613x2_a4.dgn
CHECKED BY: ABH DATE: NOV. 2022 SCALE: As Shown
DESIGNED BY: JME DATE: MAR. 2022
BRIDGE NO. 07606 DRAWING NO. 65946

6/29/2023 1:37:25 PM
abhall
WORKSPACE: ARDOT Bridge (2019)
L:\2021\21T01028 - ARDOT 061613 I-40 Strs and Apprs\Drawings\b061613x2_S204_AB.dgn
REVISED DATE:

DATE REVISED	DATE FILMED	DATE REVISED	DATE FILMED	FED. ROAD DIST. NO.	STATE	FED. AID PROJ. NO.	SHEET NO.	TOTAL SHEETS
				6	ARK.			
				JOB NO.		061613	138	215
				07606		END BENTS		65947

BAR LIST (END BENT NO. 1)

MARK	NO. REQ'D	LENGTH	"A"	"B"	P.D.
B401	14	24'-1"			Str.
B402	4	8'-3"			3"
B403	6	6'-4"			Str.
B404	9	10'-7"			2"
B501	74	16'-0"			2½"
B502	21	10'-8"	4'-8"	3'-1"	2½"
B503	87	13'-6"	1'-2"	6'-3"	2½"
B504	62	5'-10"	8"	2'-8"	2½"
B505	25	7'-4"	8"	3'-5"	2½"
B506	10	45'-11"			Str.
B507	12	10'-1½"	2'-10"	3'-9"	2½"
B601	9	8'-8"			4½"
B602	9	7'-8"			4½"
B701	15	9'-2½"	2'-1"	3'-9"	5¼"
B801	12	47'-9"			6"
D601E	32	4'-10"	2'-6"	2'-6"	4½"
F601	8	2'-8"			Str.
R401E	56	6'-4"			2½", 3"
R404E	16	13'-8"			Str.
W401E	56	3'-11"			3¾"
W402	28	8'-3"			Str.
W403 To W417	4 Ea.	7'-11" To 2'-3"			Str.
W418	24	5'-1"	3'-5"	1'-9"	3"
W419	4	8'-6½"	4'-6"	14	3"
W420	4	8'-0½"	4'-0"	9⅝	3"
W701	20	13'-8"			Str.
W702 To W712	4 Ea.	10'-1" To 3'-10"			Str.
W713	4	13'-7"			5¼"

BAR LIST (END BENT NO. 3)

MARK	NO. REQ'D	LENGTH	"A"	"B"	P.D.
B401	14	24'-1"			Str.
B402	4	8'-3"			3"
B403	6	6'-4"			Str.
B404	9	10'-7"			2"
B501	74	16'-0"			2½"
B502	21	10'-8"	4'-8"	3'-1"	2½"
B503	87	13'-6"	1'-2"	6'-3"	2½"
B504	62	5'-10"	8"	2'-8"	2½"
B505	25	7'-4"	8"	3'-5"	2½"
B506	10	45'-11"			Str.
B507	12	10'-1½"	2'-10"	3'-9"	2½"
B601	9	8'-8"			4½"
B602	9	7'-8"			4½"
B701	15	9'-2½"	2'-1"	3'-9"	5¼"
B801	12	47'-9"			6"
D601E	32	4'-10"	2'-6"	2'-6"	4½"
F601	8	2'-8"			Str.
R401E	56	6'-4"			2½", 3"
R404E	16	13'-8"			Str.
W401E	56	3'-11"			3¾"
W402	28	8'-3"			Str.
W403 To W417	4 Ea.	7'-11" To 2'-3"			Str.
W418	24	5'-1"	3'-5"	1'-9"	3"
W419	4	8'-6½"	4'-6"	14	3"
W420	4	8'-0½"	4'-0"	9⅝	3"
W701	20	13'-8"			Str.
W702 To W712	4 Ea.	10'-1" To 3'-10"			Str.
W713	4	13'-7"			5¼"

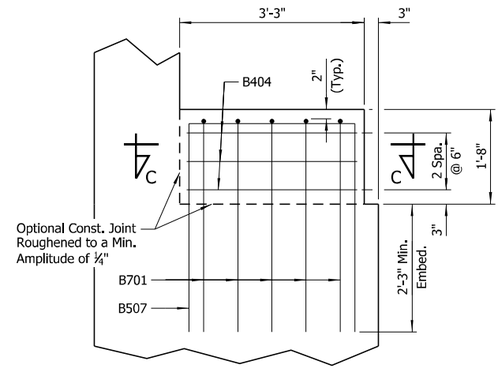

ELEVATION - CONCRETE RESTRAINER

(Looking Normal To End Bent Backwall)
Scale: ¾" = 1'-0"

NOTE:
See Dwg. No. 65959 for additional details.

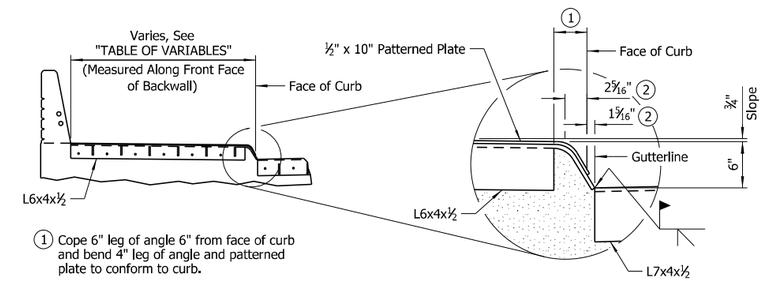

(1) Cope 6" leg of angle 6" from face of curb and bend 4" leg of angle and patterned plate to conform to curb.

(2) Dimensions shown measured perpendicular to curb.

SIDEWALK AND CURB DETAIL

No Scale

TABLE OF VARIABLES		
End Bent	Left of CL Construction	Right of CL Construction
1	6'-7⅜"	6'-7 5/16"
3	6'-7⅜"	6'-7 5/16"

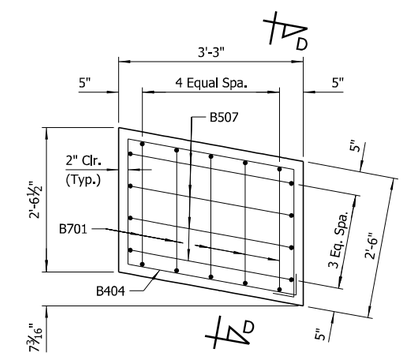

SECTION C-C

Scale: ¾" = 1'-0"

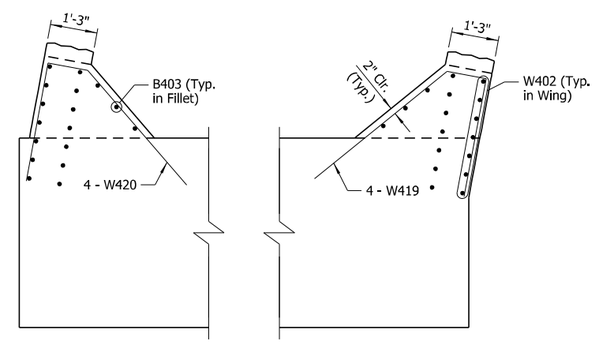

SECTION Z-Z

Scale: ½" = 1'-0"

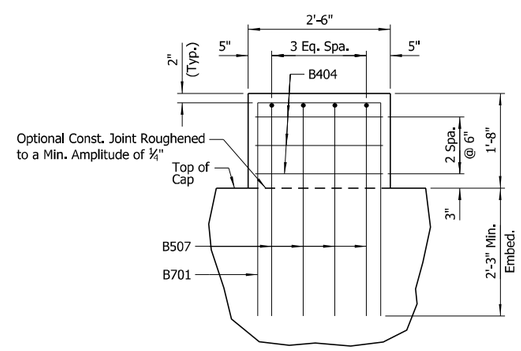

SECTION D-D

Scale: ¾" = 1'-0"

BAR BENDING DIAGRAMS

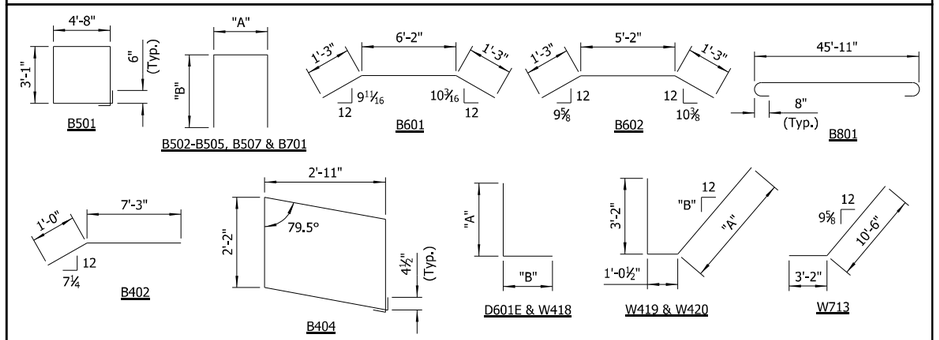

NOTES:
Dimensions of bars are out-to-out.

Bars designated with "E" suffix shall be epoxy coated.

For bar bending diagrams of R401E & W401E, see Std. Dwg. No. 55070.

STATE OF ARKANSAS
LICENSED PROFESSIONAL ENGINEER
No.14498
ADAM B. HALL

DIGITALLY SIGNED 6/30/2023
BRIDGE ENGINEER

SHEET 5 OF 5
DETAILS OF END BENTS
HIGHWAY 13 OVER I-40

ROUTE SEC.

ARKANSAS STATE HIGHWAY COMMISSION

LITTLE ROCK, ARK.

DRAWN BY:	HEW	DATE:	MAR. 2022	FILENAME:	b061613x2_a5.dgn
CHECKED BY:	ABH	DATE:	NOV. 2022	SCALE:	As Shown
DESIGNED BY:	JME	DATE:	MAR. 2022		

BRIDGE NO. 07606 DRAWING NO. 65947

abhall
WORKSPACE(ARDOT Bridge (2019)
L:\2021\21T01028 - ARDOT 061613 I-40 Strs and Apprs\Drawings\b061613x2_S205_AB.dgn
6/29/2023 1:37:27 PM
REVISED DATE:

DATE REVISED	DATE FILMED	DATE REVISED	DATE FILMED	FED. ROAD DIST. NO.	STATE	FED. AID PROJ. NO.	SHEET NO.	TOTAL SHEETS
				6	ARK.			
				JOB NO.		061613	139	215
				07606		INT. BENT		65948

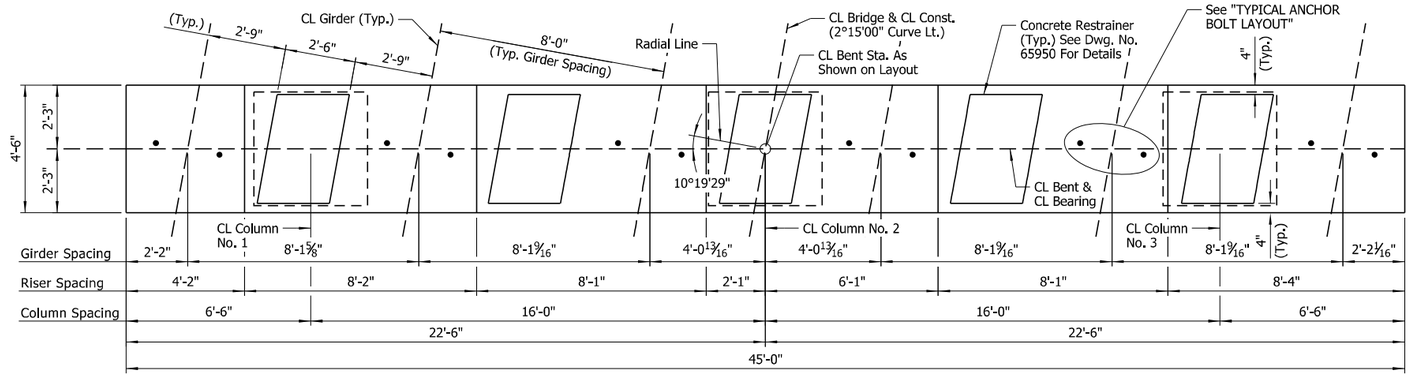

PLAN

(Footing And Crashwall Not Shown For Clarity)
Scale: ⅜" = 1'-0"

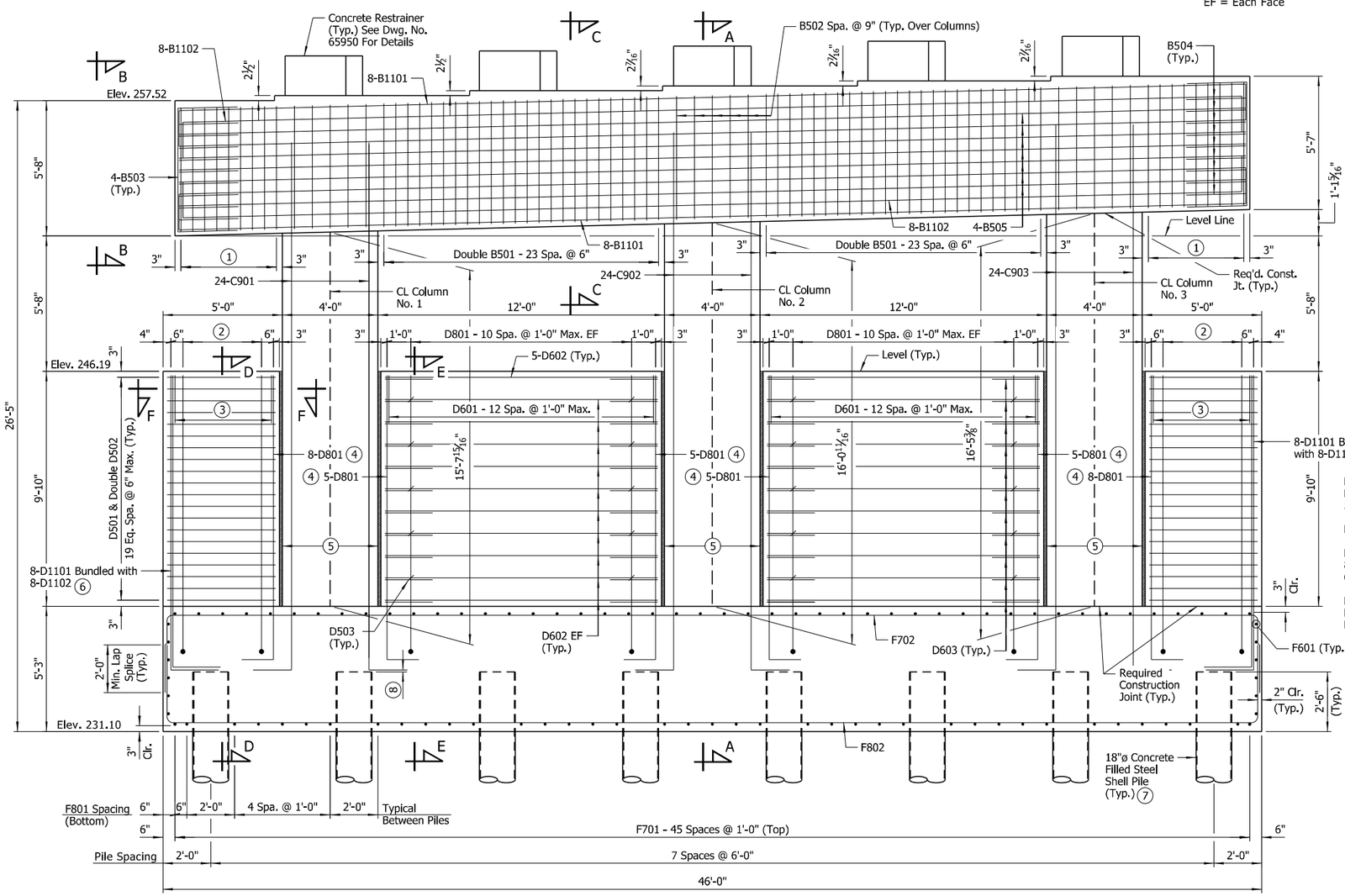

ELEVATION

(Looking Ahead)
Scale: ⅜" = 1'-0"

LEGEND

EF = Each Face

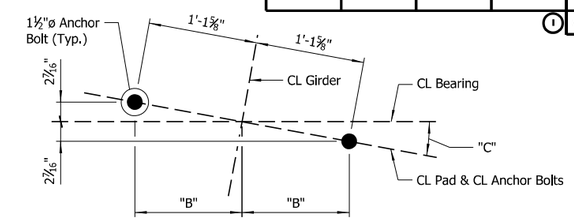

TABLE OF VARIABLES	
Column No.	"A"
1	46
2	48
3	49

TYPICAL ANCHOR BOLT LAYOUT

No Scale

NOTE:
For "DETAILS OF ELASTOMERIC BEARINGS", see Dwg. No. 65951.

1. Double B501 - 8 Spaces @ 6"
2. D801 - 7 Spaces @ 6" Max. EF
3. D601 - 5 Spaces @ 1'-0" Max.
4. Mechanical couplers may be substituted to facilitate column construction. See "OPTIONAL MECHANICAL COUPLER DETAIL" on Dwg. No. 65950 for requirements.
5. 1½" polystyrene foam board between crashwall and columns
6. See "SECTION F-F" on Dwg. No. 65949
7. "ALTERNATE PILE ANCHORAGE DETAIL" on Std. Dwg. No. 55021 required to minimize interference with reinforcing in footing
8. 1" Clr. (Typ. For C90X & D1101 Bars)

TABLE OF VARIABLES		
Girder No.	"B"	"C"
1	1'-1⅜"	10°24'27"
2	1'-1⅜"	10°22'27"
3	1'-1⅜"	10°20'28"
4	1'-1⅜"	10°18'30"
5	1'-1 7/16"	10°16'33"
6	1'-1 7/16"	10°14'36"

NOTES:
For General Notes, see Std. Dwg. No. 55006.

For additional information, see Layout.

For "VIEW B-B", Sections C-C thru G-G & aesthetic details, see Dwg. No. 65949.

For "BAR LIST", "BAR BENDING DIAGRAMS" & "FOOTING PLAN", see Dwg. No. 65950.

NOTE:
Concrete restrainer and other cap reinforcement not shown for clarity.

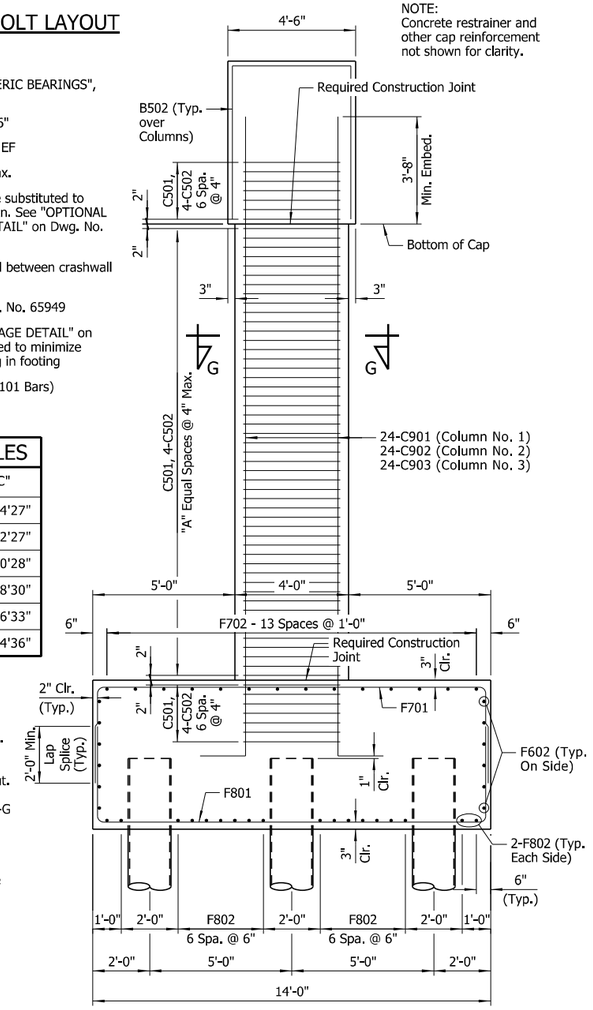

SECTION A-A

Scale: ⅜" = 1'-0"

STATE OF ARKANSAS
LICENSED PROFESSIONAL ENGINEER
No.14498
ADAM B. HALL

DIGITALLY SIGNED 6/30/2023
BRIDGE ENGINEER

SHEET 1 OF 3
DETAILS OF INTERMEDIATE BENT
HIGHWAY 13 OVER I-40

ROUTE SEC.

ARKANSAS STATE HIGHWAY COMMISSION
LITTLE ROCK, ARK.

DRAWN BY: CWT DATE: MAR. 2022 FILENAME: b061613x2_b1.dgn
CHECKED BY: ABH DATE: NOV. 2022 SCALE: As Shown
DESIGNED BY: JJB DATE: MAR. 2022
BRIDGE NO. 07606 DRAWING NO. 65948

abhall 6/29/2023 1:37:28 PM
WORKSPACE\ARDOT Bridge (2019)
L:\2021\21T01028 - ARDOT 061613 I-40 Strs and Apprs\Drawings\b061613x2_S206_BE.dgn
REVISED DATE:

DATE REVISED	DATE FILMED	DATE REVISED	DATE FILMED	FED. ROAD DIST. NO.	STATE	FED. AID PROJ. NO.	SHEET NO.	TOTAL SHEETS
				6	ARK.			
				JOB NO.		061613	140	215
				1 07606		INT. BENT		65949

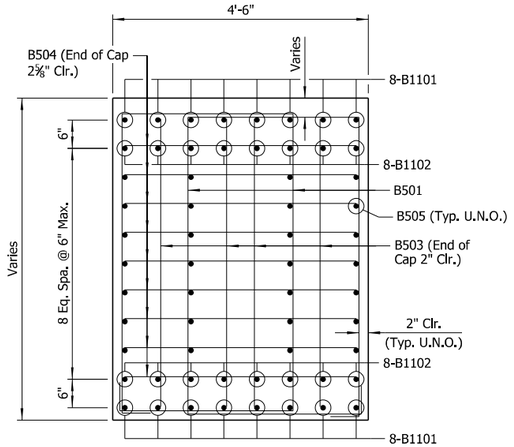

VIEW B-B

Scale: ¾" = 1'-0"

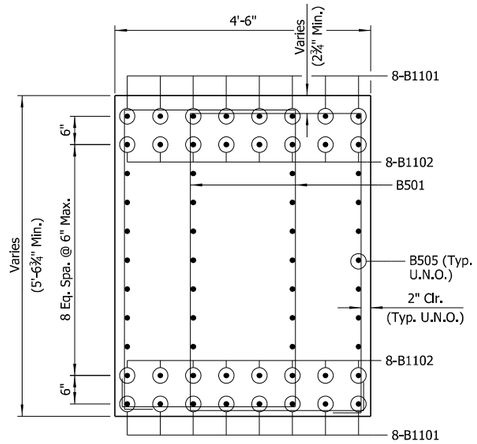

SECTION C-C

Scale: ¾" = 1'-0"

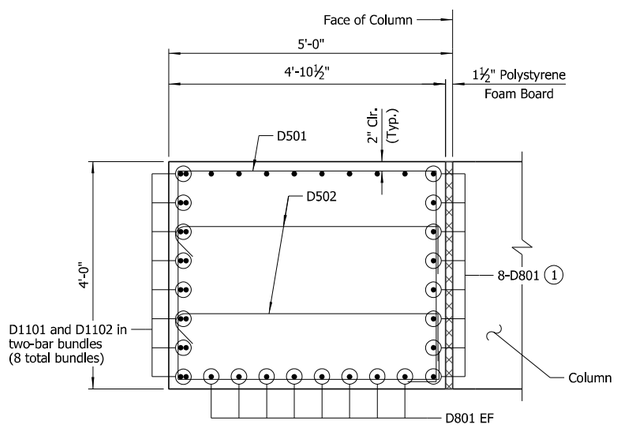

SECTION F-F

Scale: ¾" = 1'-0"

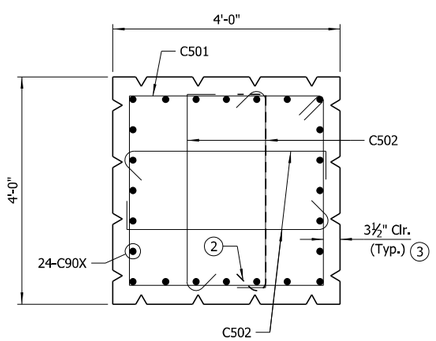

SECTION G-G

(Column Section Above Crashwall Shown)

Scale: ¾" = 1'-0"

1. Mechanical couplers may be substituted to facilitate column construction. See "OPTIONAL MECHANICAL COUPLER DETAIL" on Dwg. No. 65950 for requirements.
2. Alternate orientation of hooks on C502 bars on adjacent horizontal rows.
3. Form liner shall be a maximum depth of 1½" to provide a minimum clear cover of 2". Form liner shall not be used below top of crashwall.

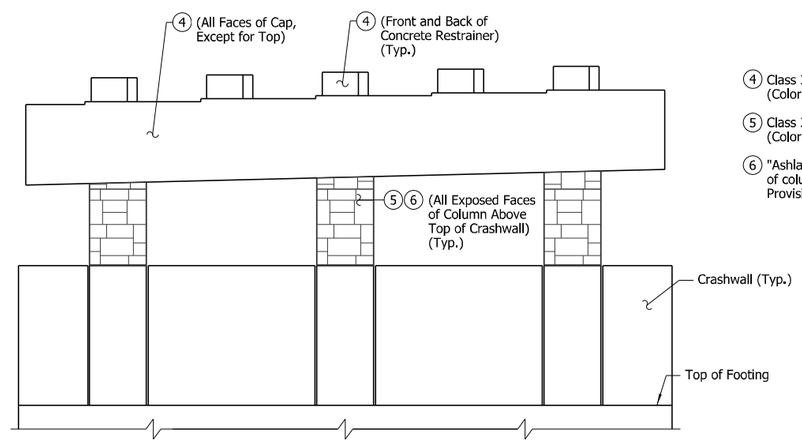

ELEVATION - BENT AESTHETICS

No Scale

NOTE:
See Special Provision "TEXTURED COATING FINISH" for additional information regarding the placement of the Class 3 Textured Coating Finish.

4. Class 3 Textured Coating Finish (Color = Brown, Color Chip No. 33522)
5. Class 3 Textured Coating Finish (Color = Brown, Color Chip No. 30219)
6. "Ashlar Stone" pattern form liner (full-height of column - exposed faces only), see Special Provision "ARCHITECTURAL FINISH".

LEGEND

U.N.O. = Unless Noted Otherwise
EF = Each Face

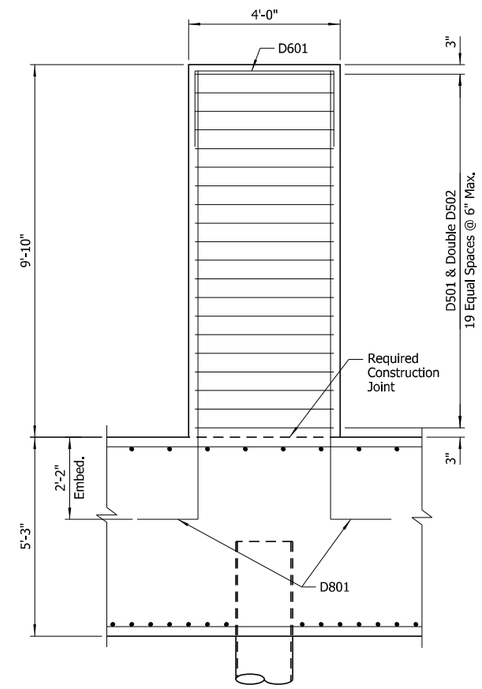

SECTION D-D

Scale: ½" = 1'-0"

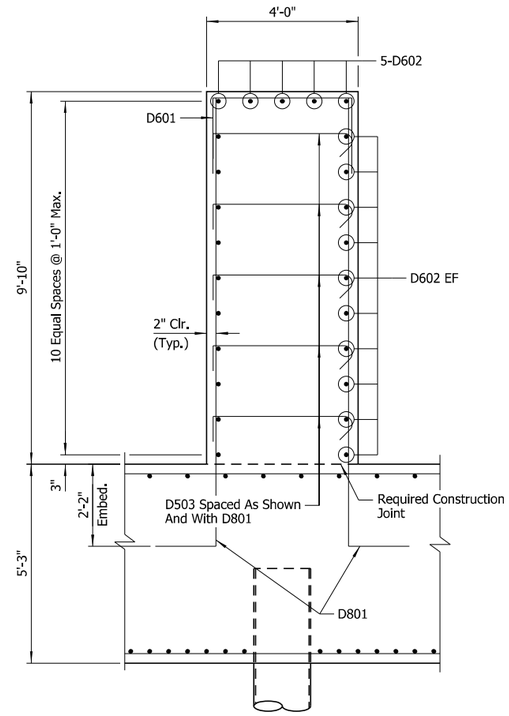

SECTION E-E

Scale: ½" = 1'-0"

STATE OF ARKANSAS
LICENSED PROFESSIONAL ENGINEER
No.14498
ADAM B. HALL

DIGITALLY SIGNED 6/30/2023
BRIDGE ENGINEER

SHEET 2 OF 3
DETAILS OF INTERMEDIATE BENT
HIGHWAY 13 OVER I-40

ROUTE SEC.

ARKANSAS STATE HIGHWAY COMMISSION
LITTLE ROCK, ARK.

DRAWN BY:	CWT	DATE:	MAR. 2022	FILENAME:	b061613x2_b2.dgn
CHECKED BY:	ABH	DATE:	NOV. 2022	SCALE:	As Shown
DESIGNED BY:	JJB	DATE:	MAR. 2022		

BRIDGE NO. 07606 DRAWING NO. 65949

abhall 6/29/2023 1:37:29 PM
WORKSPACE:ARDOT Bridge (2019)
L:\2021\21T01028 - ARDOT 061613 I-40 Strs and Apprs\Drawings\b061613x2_S207_BE.dgn
REVISED DATE:

DATE REVISED	DATE FILMED	DATE REVISED	DATE FILMED	FED. ROAD DIST. NO.	STATE	FED. AID PROJ. NO.	SHEET NO.	TOTAL SHEETS
				6	ARK.			
				JOB NO.		061613	141	215
				07606		INT. BENT		65950

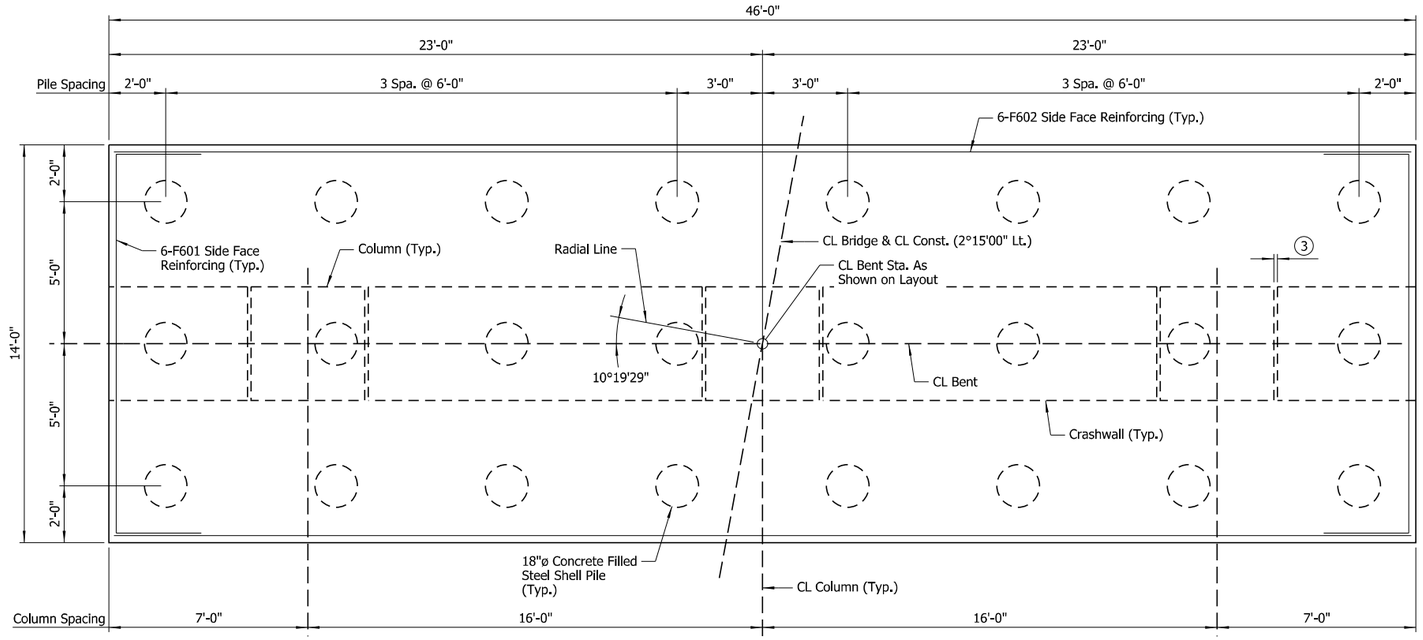

FOOTING PLAN

Scale: ⅜" = 1'-0"

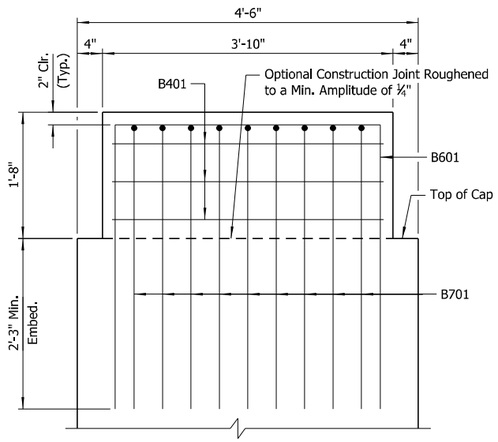

SECTION H-H

Scale: 1" = 1'-0"

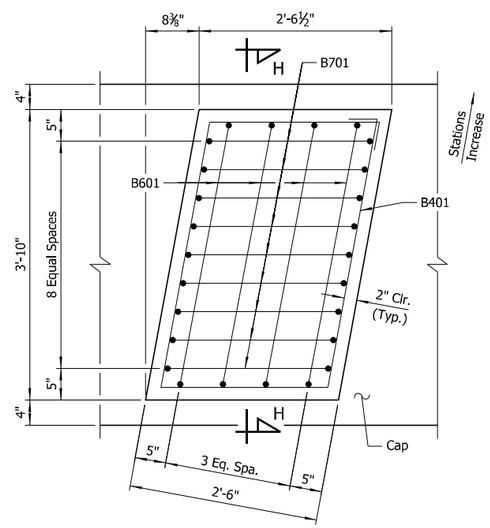

PLAN

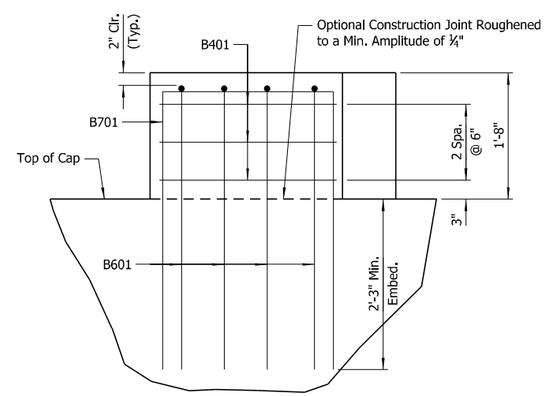

ELEVATION

(Looking Ahead)

CONCRETE RESTRAINER

Scale: 1" = 1'-0"

1. The Mechanical Couplers shall be an approved type in accordance with the ARDOT Qualified Products List (QPL).

   The cost of Mechanical Couplers shall not be measured separately but shall be considered subsidiary to the item "REINFORCING STEEL-BRIDGE (GRADE 60)".

   Mechanical couplers shall develop at least 125% of the specified yield strength of the reinforcing steel.

2. One end of bar shall be threaded to match Mechanical Coupler.

3. Provide 1½" Polystyrene Foam Board between Column Face and Crashwall (Typ.)

NOTE:
Mechanical couplers are optional for D801 bars near columns as shown on Dwg. No. 65948 & on "SECTION F-F" on Dwg. No. 65949. Bar designations and bar list do not account for the use mechanical couplers.

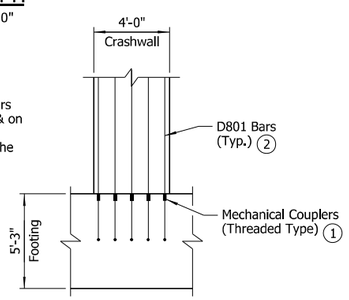

OPTIONAL MECHANICAL COUPLER DETAIL

No Scale

BAR LIST

MARK	NO. REQ'D	LENGTH	"A"	"B"	P.D.
B401	15	11'-11"			2"
B501	132	17'-0"	3'-1"	5'-2"	2½"
B502	15	14'-4"	4'-2"	5'-2"	2½"
B503	8	9'-10"	5-0"	2'-6"	2½"
B504	18	8'-10"	4'-0"	2'-6"	2½"
B505	28	44'-8"			Str.
B601	20	10'-1"	3'-5"	3'-6"	4½"
B701	45	9'-3"	2'-1"	3'-9"	5¼"
B1101	16	47'-9"	44'-5"		11¼"
B1102	16	47'-6"	44'-2"		11¼"
C501	188	14'-4"			2½"
C502	752	4'-7½"	3'-5"		2½"
C901	24	23'-5"	22'-1"	1'-7¼"	9"
C902	24	23'-10"	22'-6"	1'-7¼"	9"
C903	24	24'-2"	22'-10"	1'-7¼"	9"
D501	40	16'-11"	4'-6½"	3'-8"	2½"
D502	80	5'-9"	4'-6½"		2½"
D503	110	4'-10½"	3'-8"		2½"

BAR LIST

MARK	NO. REQ'D	LENGTH	"A"	"B"	P.D.
D601	38	7'-4½"	3'-8"	2'-0"	4½"
D602	50	11'-5"			Str.
D603	44	7'-2½"	3'-6"	2'-0"	4½"
D801	112	12'-11½"	11'-10"	1'-4"	6"
D1101	16	14'-0"	12'-4"	2'-0"	11¼"
D1102	16	13'-10"	12'-2"	2'-0"	11¼"
F601	12	19'-2½"	13'-6"	3'-0"	4½"
F602	12	45'-6"			Str.
F701	46	20'-2"	13'-8"	3'-5"	5¼"
F702	14	52'-2"	45'-8"	3'-5"	5¼"
F801	39	20'-1"	13'-8"	3'-5"	6"
F802	18	52'-1"	45'-8"	3'-5"	6"

BAR BENDING DIAGRAMS

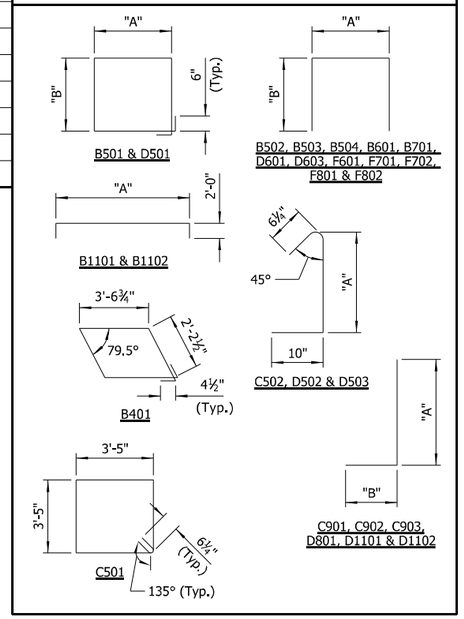

NOTE:
Dimensions of bars are out-to-out.

STATE OF ARKANSAS
LICENSED PROFESSIONAL ENGINEER
No.14498
ADAM B. HALL

DIGITALLY SIGNED 6/30/2023
BRIDGE ENGINEER

SHEET 3 OF 3
DETAILS OF INTERMEDIATE BENT
HIGHWAY 13 OVER I-40

ROUTE SEC.

ARKANSAS STATE HIGHWAY COMMISSION

LITTLE ROCK, ARK.

DRAWN BY:	CWT	DATE:	MAR. 2022	FILENAME:	b061613x2_b3.dgn
CHECKED BY:	ABH	DATE:	NOV. 2022	SCALE:	As Shown
DESIGNED BY:	JJB	DATE:	MAR. 2022		

BRIDGE NO. 07606 DRAWING NO. 65950

abhall 6/29/2023 1:37:30 PM
WORKSPACE:ARDOT Bridge (2019)
L:\2021\21T01028 - ARDOT 061613 I-40 Strs and Apprs\Drawings\b061613x2_S208_BE.dgn
REVISED DATE:

DATE REVISED	DATE FILMED	DATE REVISED	DATE FILMED	FED. ROAD DIST. NO.	STATE	FED. AID PROJ. NO.	SHEET NO.	TOTAL SHEETS
				6	ARK.			
				JOB NO.		061613	142	215
				(1) 07606		ELASTOMERIC BEARINGS		65951

TABLE OF FABRICATOR VARIABLES

Location		Bearing Type	No. Of Bearings Each Bent	(3) Maximum Design Load (Kips)	G	H	Elastomeric Pad							External Load Plate									Anchor Bolt				
							A	B	N	t_i	t_e	No. & Thickness Of Steel Laminae	T	C	D	E	F	J	K	M	T_a	T_b	Anchor Bolt (Dia. x L)	Grade	Pipe Sleeve Size (Dia. x L)	Sheet Metal Sleeve Size (Dia. x L)	Steel Washer Size (O.D.)
Bent No.	Girder No.																										
1	All	Exp.	6	151	7 15/16"	4 15/16"	16"	10"	4	½"	¼"	5 @ 12 Ga.	3"	11"	27½"	4¾"	2⅝"	-	½"	10¾"	2.06"	1.94"	1.75" x 29"	55	2" x 5 3/16"	4" x 7"	3⅜"
2	All	Fixed	6	381	7 11/16"	4 15/16"	18"	13"	4	½"	¼"	5 @ 12 Ga.	3"	14"	35½"	2¼"	2¼"	2 7/16"	½"	13⅞"	1.98"	2.02"	1.5" x 26"	55	1½" x 5 3/16"	3" x 13"	3"
3	All	Exp.	6	129	7 15/16"	4 15/16"	16"	10"	4	½"	¼"	5 @ 12 Ga.	3"	11"	27½"	4½"	2⅝"	-	½"	10¾"	1.92"	2.08"	1.75" x 29"	55	2" x 5 3/16"	4" x 7"	3⅜"

(1) Care shall be taken to ensure that the external load plate is in full and complete contact with the girder flange before welding begins.

Unless otherwise approved by the Engineer, welding of the external load plate at expansion bearings to the girder will be allowed only when: 1) the approximate average air temperature during the 24 hour period immediately preceding welding is between 40°F and 80°F; and 2) the slots in the external load plate are positioned to center on the anchor bolts; and 3) no horizontal deformation of the elastomeric pad is evident. If welding at other temperatures is required, the Engineer will provide adjustment data.

(2) Centerline Elastomeric Pad shall be aligned with CL Girder.

(3) Maximum Design Load = LRFD Service I Limit State

GENERAL NOTES

Elastomeric bearings shall conform to Section 808 and shall be paid for at the unit price bid for "ELASTOMERIC BEARINGS."

External load plates and shear blocks shall conform to ASTM A709, Grade 50. Pipe sleeves shall be ASTM A500, Grade B, and shall be galvanized to conform to AASHTO M 232, Class C or ASTM B695, Class 50.

External load plates and shear blocks shall be completely fabricated (including bevel, bolt holes and all shop welding) and shall be cleaned before vulcanizing to the elastomeric bearing. The surfaces in contact with the elastomeric bearing shall be cleaned in accordance with Subsection 808.03. Other surfaces shall be blast cleaned in accordance with Subsection 807.84(b) for painted steel.

Anchor bolts, washers and nuts shall conform to Subsection 807.07. The anchor bolt grade of steel shall be as specified in the "TABLE OF FABRICATOR VARIABLES". Indentations shall be circular with rounded bottoms and staggered as shown in the details.

Pipe sleeves, anchor bolts, washers and nuts shall be paid for at the unit price bid for "STRUCTURAL STEEL IN PLATE GIRDER SPANS (A709, GR. 50)". External load plates and shear blocks will not be measured or paid for separately but will be included in the unit price bid for "ELASTOMERIC BEARINGS".

Bearings shall be seated in accordance with Subsection 808.08. This work and materials are considered subsidiary to the item "ELASTOMERIC BEARINGS" and will not be paid for directly.

Prior to erection of the girders, the Contractor shall verify the orientation of the bearings with respect to T_a and T_b.

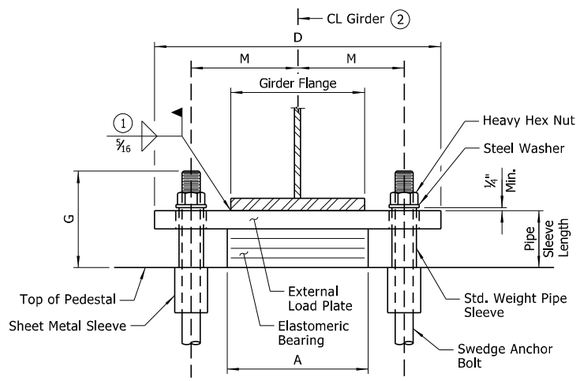

FRONT VIEW - AT BENT NOS. 1 & 3

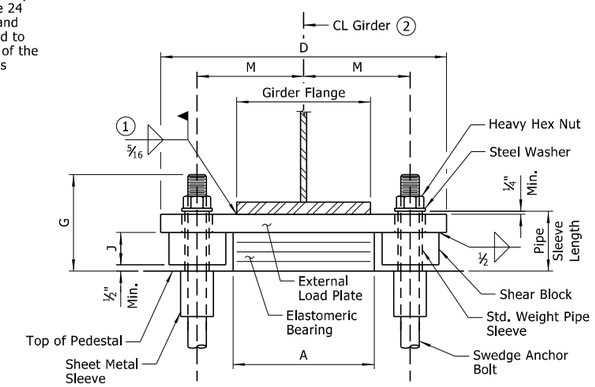

FRONT VIEW - AT BENT NO. 2

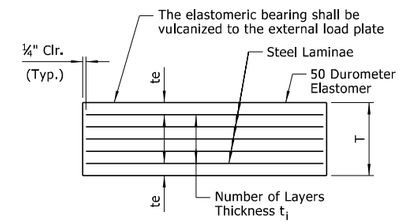

t_e = Thickness of elastomer cover on top and bottom of pad
t_i = Thickness of elastomer between steel laminae
N = Number of elastomer layers of thickness t_i

ELASTOMERIC BEARING

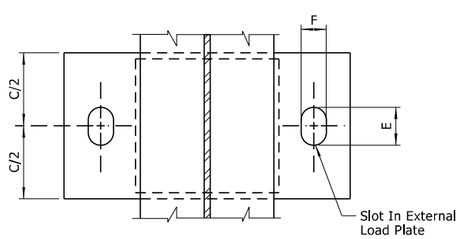

PLAN VIEW - AT BENT NOS. 1 & 3

NOTE:
The direction of the bevel of the external load plate may not be accurately depicted with respect to Ta and Tb values shown in "TABLE OF FABRICATOR VARIABLES".

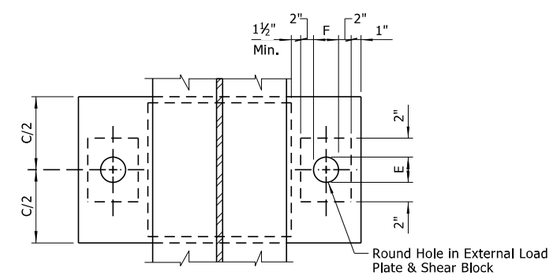

PLAN VIEW - AT BENT NO. 2

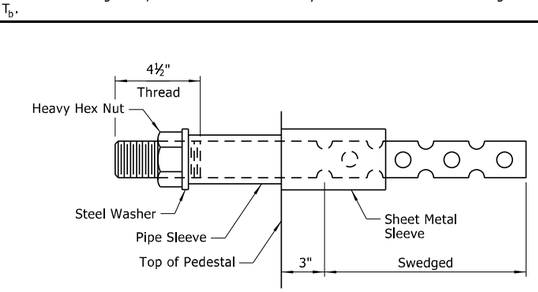

ANCHOR BOLT DETAIL

NOTE:
Anchor bolts may be cast in place or drilled and grouted into place. If anchor bolts are to be cast in place, the galvanized sheet metal sleeves will not be required.

If anchor bolts are to be drilled and grouted in place, the galvanized sheet metal sleeves shall be cast in place as shown. Sleeves shall be dry packed with styrofoam, urethane foam or approved equal prior to pouring of concrete. After pouring of the cap and prior to erection of structural steel, the dry pack shall be removed and holes for the anchor bolts shall be accurately drilled into the concrete. Bolts placed in drilled holes shall be accurately set and fixed using a QPL-approved epoxy or non-shrink grout that completely fills the holes. Galvanized Sheet Metal Sleeves shall meet the requirements of ASTM A653, CS Type B or approved equivalent, be of minimum 16 gage thickness, and be galvanized according to ASTM B695, Class 50. Sheet Metal Sleeves will not be paid for directly, but will be considered subsidiary to the item "STRUCTURAL STEEL IN PLATE GIRDER SPANS (A709, GR. 50)".

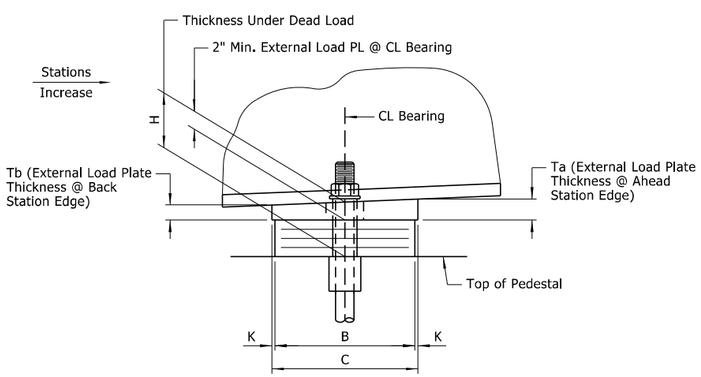

SIDE VIEW - AT BENT NOS. 1 & 3

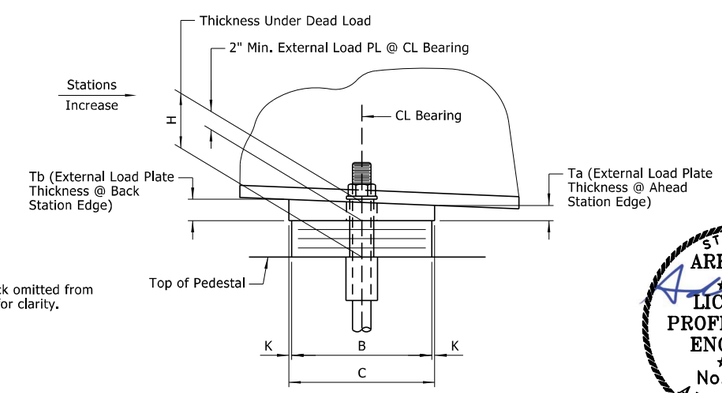

SIDE VIEW - AT BENT NO. 2

NOTE:
Shear block omitted from this view for clarity.

STATE OF ARKANSAS
LICENSED PROFESSIONAL ENGINEER
No.14498
ADAM B. HALL

DIGITALLY SIGNED 6/30/2023
BRIDGE ENGINEER

DETAILS OF ELASTOMERIC BEARINGS
HIGHWAY 13 OVER I-40
ROUTE SEC.
ARKANSAS STATE HIGHWAY COMMISSION
LITTLE ROCK, ARK.

DRAWN BY: CWT DATE: MAR. 2022 FILENAME: b061613x2_e1.dgn
CHECKED BY: ABH DATE: NOV. 2022 SCALE: As Shown
DESIGNED BY: RAK DATE: MAR. 2022
BRIDGE NO. 07606 DRAWING NO. 65951

abhall 6/29/2023 1:37:31 PM
WORKSPACE:ARDOT Bridge (2019)
L:\2021\21T01028 - ARDOT 061613 I-40 Strs and Apprs\Drawings\b061613x2_S301_BG.dgn
REVISED DATE:

DATE REVISED	DATE FILMED	DATE REVISED	DATE FILMED	FED. ROAD DIST. NO.	STATE	FED. AID PROJ. NO.	SHEET NO.	TOTAL SHEETS
				6	ARK.			
				JOB NO.		061613	143	215
				(1) 07606		225'-0" UNIT		65952

SLAB REINFORCING:

Transverse: S502E @ 6" O.C. In Top and Bottom

Longitudinal: S401E in Top (Placed as Shown)
S501E in Bottom (Placed as Shown)
S601E in Top (Placed as Shown over Int. Support)

SIDEWALK REINFORCING:

Transverse: K402E & K403E @ 6" O.C.

Longitudinal: K401E (Placed as Shown)

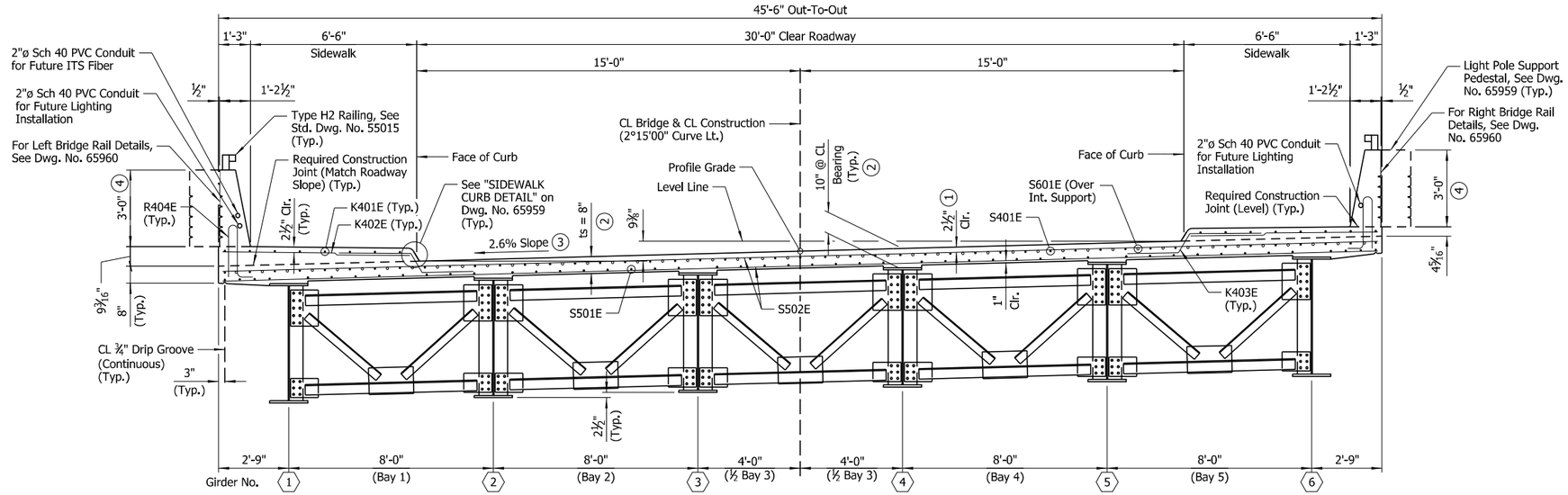

TYPICAL ROADWAY SECTION

(Looking Ahead)
Scale: ⅜" = 1'-0"

NOTE:
All horizontal dimensions shown are measured along a line radial to CL Construction.

NOTES:
For Standard General Notes and details, see Std. Dwg. Nos. 55006 & 55007.

Class 2 Protective Surface Treatment shall be applied to the roadway and sidewalk (including curbing) surfaces and to the inside face and top of the bridge rails.

Class 3 Textured Coating Finish shall be applied to bridge surfaces as specified in Special Provision "TEXTURED COATING FINISH" and in accordance with Subsection 802.19(b)(3). Textured Coating Finish shall not be applied on surfaces where Class 2 Protective Surface Treatment is applied.

Bar positions and clearances from the forms shall be maintained by means of stays, ties, hangers, or other approved devices per Subsection 804.06. Placement of slab bolsters or high-chairs with full-length lower runners directly on removable deck forms will not be allowed.

For "BAR LIST" and "BAR BENDING DIAGRAMS", see Dwg. No. 65956.

For "SCREED RAIL SUPPORT FOR PLATE GIRDERS", see Std. Dwg. No. 55007.

For additional details of conduit, see Electrical Drawings.

(1) TOLERANCE:
Minus = ¼"
Plus = Amount of slab thickening used to meet slab thickness tolerance - See "ADJUSTMENT FOR SLAB THICKNESS TOLERANCE" on Std. Dwg. No. 55007.

(2) See "ADJUSTMENT FOR SLAB THICKNESS TOLERANCE" on Std. Dwg. No. 55007.

(3) See "SUPERELEVATION SKETCH" on Dwg. No. 65942.

(4) Portion of light pole supports and outside face of bridge rails to receive an Ashlar Stone Finish. See Dwg. No. 65959.

STATE OF ARKANSAS
LICENSED PROFESSIONAL ENGINEER
No.14498
ADAM B. HALL

DIGITALLY SIGNED 6/30/2023
BRIDGE ENGINEER

SHEET 1 OF 7
DETAILS OF 225'-0" CONTINUOUS
PLATE GIRDER UNIT
HIGHWAY 13 OVER I-40

ROUTE SEC.

ARKANSAS STATE HIGHWAY COMMISSION
LITTLE ROCK, ARK.

DRAWN BY: CWT DATE: FEB. 2022 FILENAME: b061613x2_s1.dgn
CHECKED BY: ABH DATE: OCT. 2022 SCALE: As Shown
DESIGNED BY: RAK DATE: FEB. 2022
BRIDGE NO. 07606 DRAWING NO. 65952

abhall 6/29/2023 1:37:32 PM
WORKSPACE ARDOT Bridge (2019)
L:\2021\21T01028 - ARDOT 061613 I-40 Strs and Apprs\Drawings\b061613x2_S401_SX.dgn
REVISED DATE:

DATE REVISED	DATE FILMED	DATE REVISED	DATE FILMED	FED. ROAD DIST. NO.	STATE	FED. AID PROJ. NO.	SHEET NO.	TOTAL SHEETS
				6	ARK.			
				JOB NO.		061613	144	215
				07606		225'-0" UNIT		65953

EXPANSION DEVICE
Rdwy. Channel: C15x33.9
Conn. Angles: L8x4x½
Detail device ⅛" high and provide ¼" shims using 2 - 1/16" and 1 - ⅛" plates

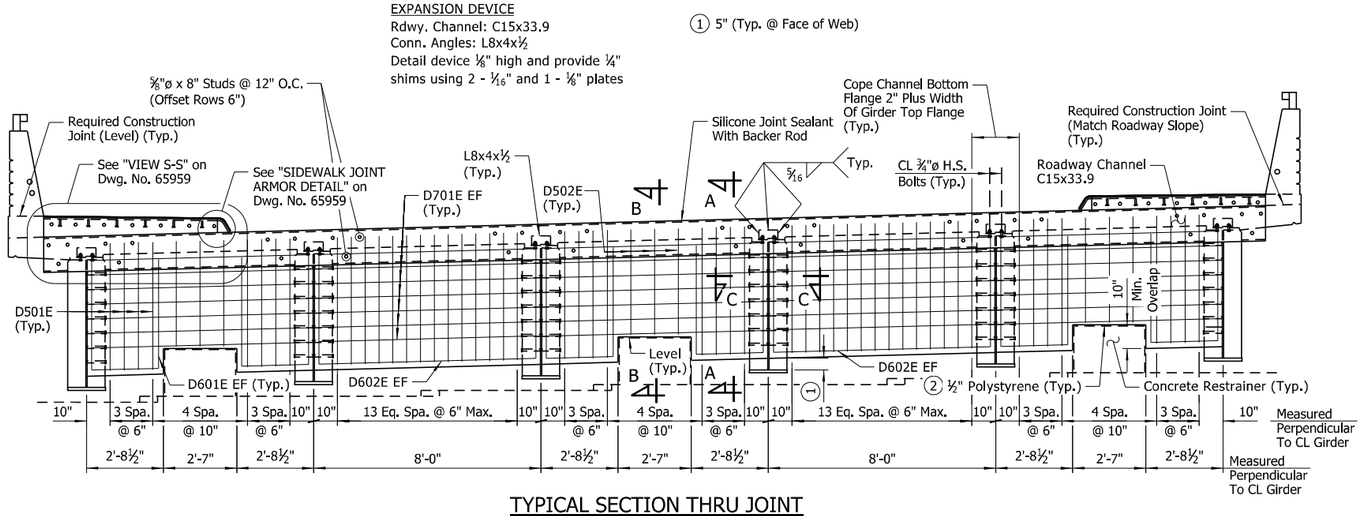

TYPICAL SECTION THRU JOINT

(Looking Ahead at End Bent 1, End Bent 3 Similar)
No Scale

NOTES:
All structural steel shall be ASTM A709, Gr. 50 unless noted otherwise, and all structural steel shall be paid for as "STRUCTURAL STEEL IN PLATE GIRDER SPANS (A709, GR. 50)".

For additional details of poured silicone joint, see Std. Dwg. No. 55008.

The profile of the Roadway Channel shall be established based on the vertical curve in conjunction with skew.

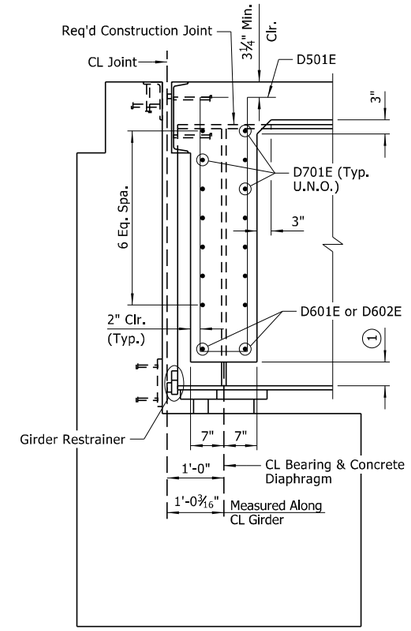

SECTION A-A

(Taken Normal To Concrete Diaphragm)
Scale: ¾" = 1'-0"

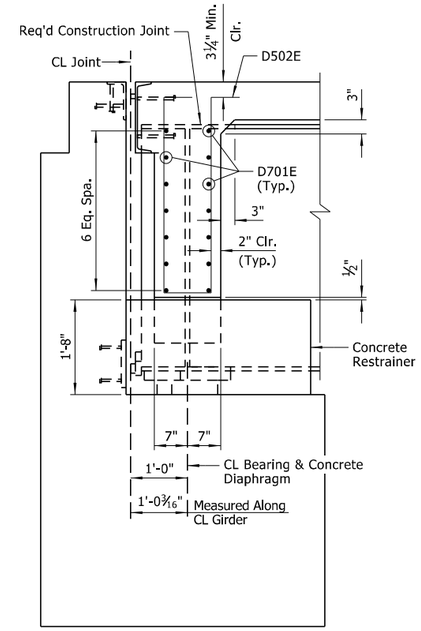

SECTION B-B

(Taken Normal To Concrete Diaphragm)
Scale: ¾" = 1'-0"

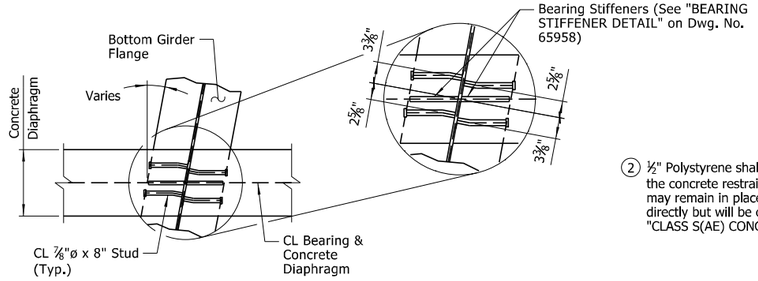

SECTION C-C

No Scale

2 ½" Polystyrene shall be used as a bond breaker between the concrete restrainer and the concrete diaphragm and may remain in place. Polystyrene will not be paid for directly but will be considered subsidiary to the item "CLASS S(AE) CONCRETE-BRIDGE".

LEGEND

U.N.O. = Unless Noted Otherwise
EF = Each Face

NOTES:
Forms for concrete diaphragms shall be removable.

Prior to pouring concrete diaphragms, remove mill scale from steel surfaces to be in contact with concrete with a wire brush.

All concrete diaphragms shall be poured a minimum of 48 hours before the first deck pour.

TABLE OF SILICONE JOINT DATA

Bent No.(s)	"A" Width Perpendicular To Joint At 24 Hour Average Temperature 3 Of:			"B" Perpendicular To Joint At 60°F	Bumper Plate Size
	40°F	60°F	80°F		
1 & 3	2 3/16"	2"	1 13/16"	2¼"	1" x 1" x 12"

3 The temperature used to set the joint opening shall be the approximate average air temperature during the 24-hour period immediately before the bolts are tightened. The Engineer shall establish the temperature. Interpolation of the table may be necessary.

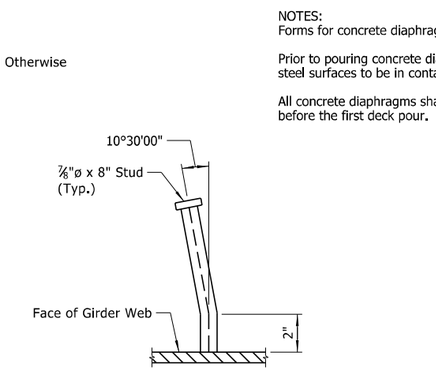

STUD DETAIL AT DIAPHRAGM

No Scale

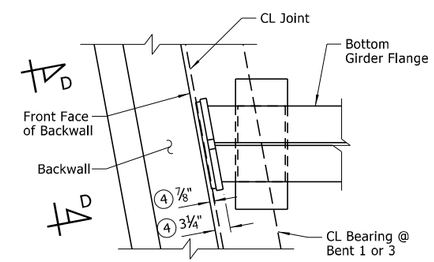

PLAN OF GIRDER RESTRAINER

Scale: ¾" = 1'-0"

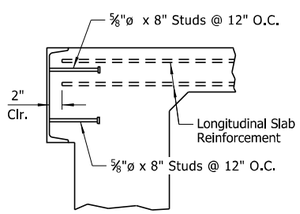

NOTE:
As an alternate to ⅝"ø studs, ½"ø x 8" studs spaced @ 8" o.c. may be used. Use weight of ⅝"ø stud as basis of measurement of Structural Steel in anchors.

DETAIL OF ANCHORS AND PLACEMENT OF LONGITUDINAL REINFORCEMENT

No Scale

4 Thicknesses of Girder Restrainer Plate and Bumper Bar shown are based on theoretical gap of 3¼" between end of girder and face of backwall (⅞" between face of bumper plate as detailed and face of backwall at 60°F). Prior to installing the Girder Restrainer assembly, the actual gap shall be field measured and final plate dimensions submitted for review. In no case shall the actual plate thickness used in the assembly be less than ½".

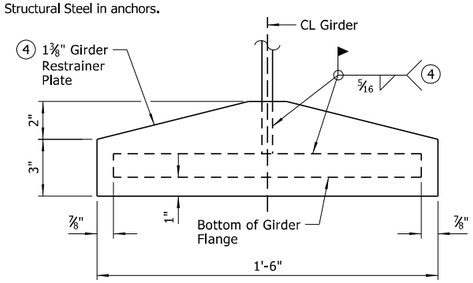

VIEW D-D

No Scale

NOTES:
Girder restrainer plate shall be centered on each girder line.

Bumper bar not shown in this view.

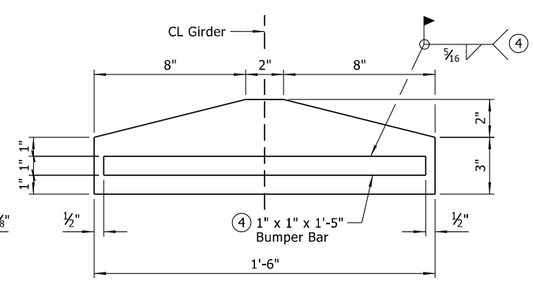

VIEW D-D

No Scale

NOTE:
Hidden lines of girder are not shown in this view.

STATE OF ARKANSAS
LICENSED PROFESSIONAL ENGINEER
No.14498
ADAM B. HALL
DIGITALLY SIGNED 6/30/2023
BRIDGE ENGINEER

SHEET 2 OF 7
DETAILS OF 225'-0" CONTINUOUS PLATE GIRDER UNIT
HIGHWAY 13 OVER I-40
ROUTE SEC.
ARKANSAS STATE HIGHWAY COMMISSION
LITTLE ROCK, ARK.

DRAWN BY:	CWT	DATE:	FEB. 2022	FILENAME:	b061613x2_s2.dgn
CHECKED BY:	ABH	DATE:	OCT. 2022	SCALE:	As Shown
DESIGNED BY:	RAK	DATE:	FEB. 2022		

BRIDGE NO. 07606 DRAWING NO. 65953

abhall 6/29/2023 1:37:33 PM
WORKSPACE: ARDOT Bridge (2019)
L:\2021\21T01028 - ARDOT 061613 I-40 Strs and Apprs\Drawings\b061613x2_S402_SX.dgn
REVISED DATE:

DATE REVISED	DATE FILMED	DATE REVISED	DATE FILMED	FED. ROAD DIST. NO.	STATE	FED. AID PROJ. NO.	SHEET NO.	TOTAL SHEETS
				6	ARK.			
				JOB NO.		061613	145	215
				(1) 07606		225'-0" UNIT		65954

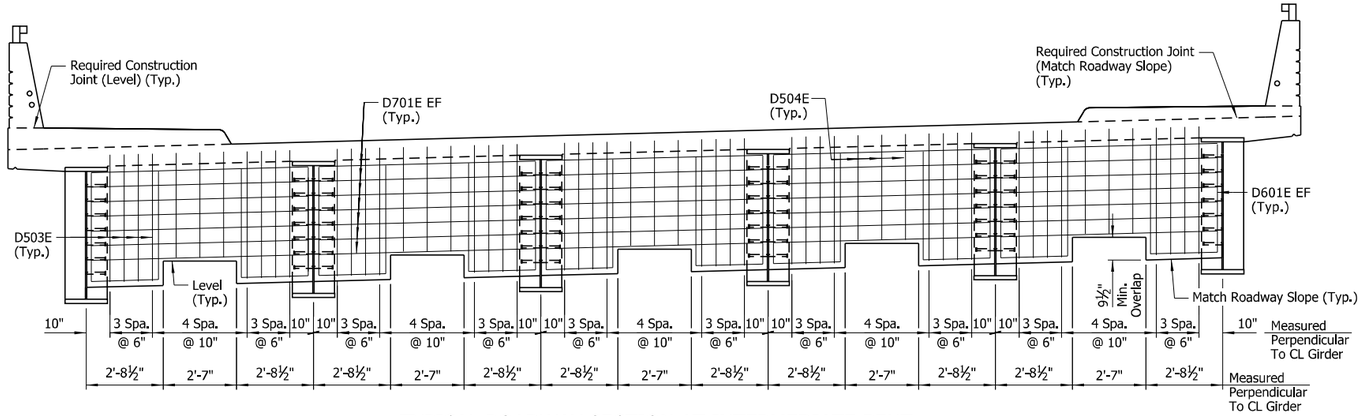

TYPICAL ROADWAY SECTION AT INTERMEDIATE BENT

(Looking Ahead)
No Scale

NOTES:
Forms for concrete diaphragms shall be removable.

Prior to pouring concrete diaphragms, remove mill scale from steel surfaces to be in contact with concrete with a wire brush.

All concrete diaphragms shall be poured a minimum of 48 hours before the first deck pour.

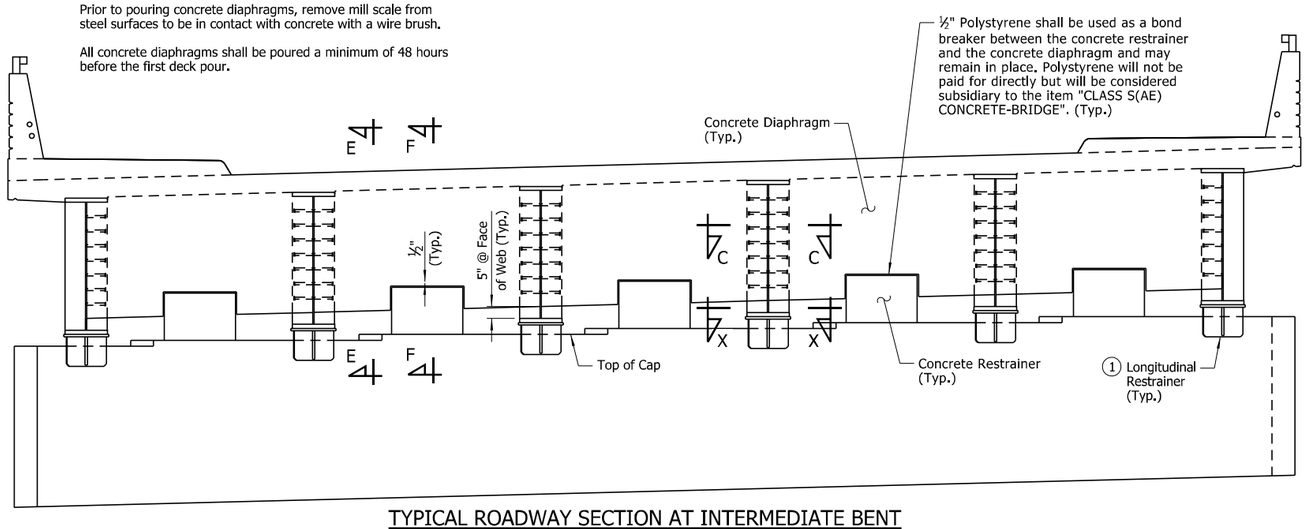

TYPICAL ROADWAY SECTION AT INTERMEDIATE BENT SHOWING CONCRETE RESTRAINERS

(Looking Ahead)
No Scale

(1) NOTE:
Field weld longitudinal restrainer after deck has been poured.

NOTE:
See Dwg. No. 65953 for "SECTION C-C" and "STUD DETAIL AT DIAPHRAGM".

LEGEND

U.N.O. = Unless Noted Otherwise
EF = Each Face

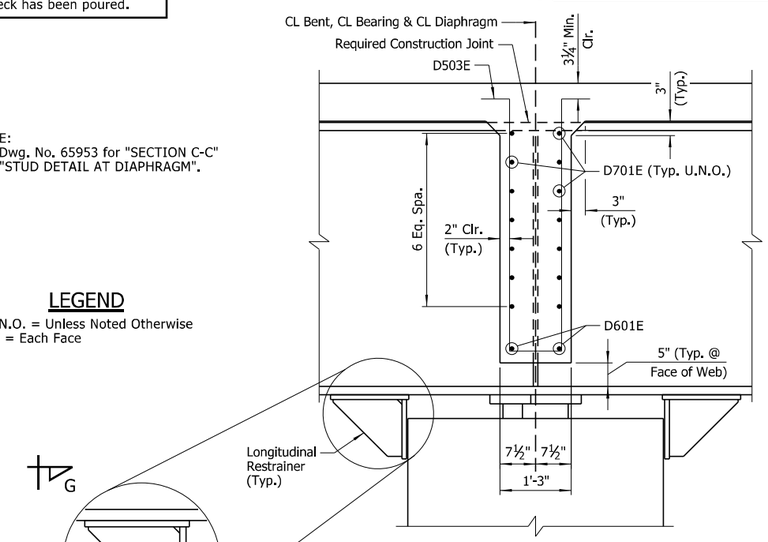

SECTION E-E

(Taken Normal To Concrete Diaphragm)
Scale: ¾" = 1'-0"

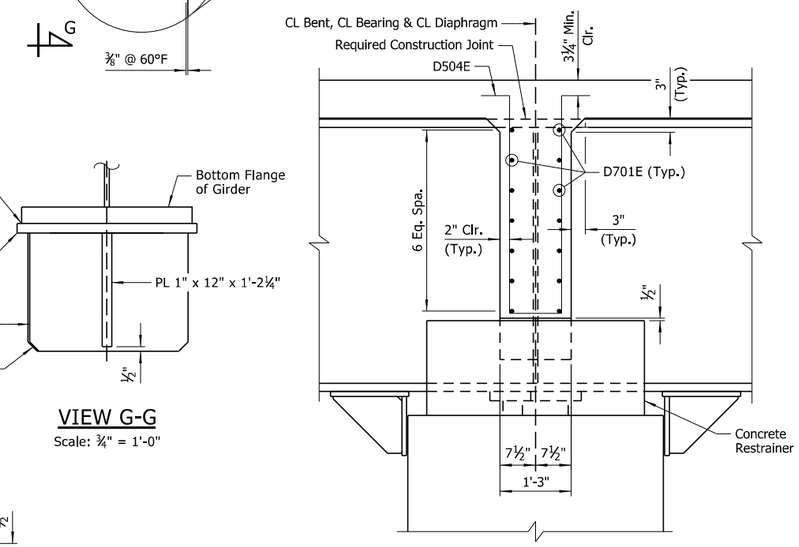

SECTION F-F

(Taken Normal To Concrete Diaphragm)
Scale: ¾" = 1'-0"

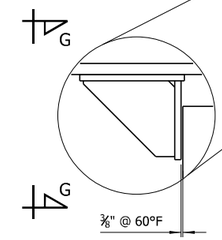

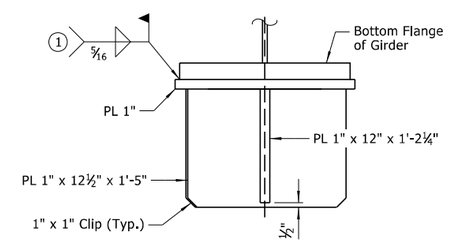

VIEW G-G

Scale: ¾" = 1'-0"

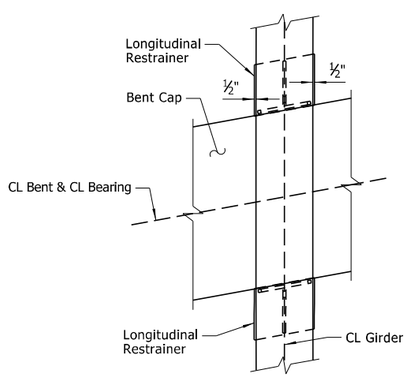

VIEW X-X

Scale: ½" = 1'-0"

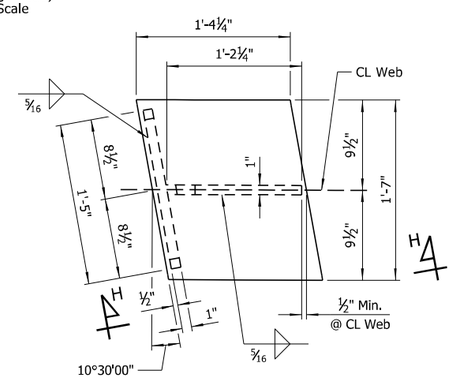

PLAN OF LONGITUDINAL RESTRAINER

Scale: 1½" = 1'-0"

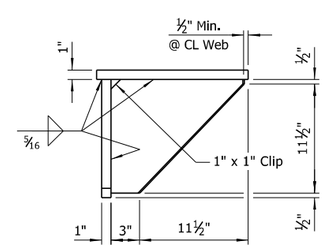

VIEW H-H

Scale: 1½" = 1'-0"

STATE OF ARKANSAS
LICENSED PROFESSIONAL ENGINEER
No.14498
ADAM B. HALL

DIGITALLY SIGNED 6/30/2023
BRIDGE ENGINEER

SHEET 3 OF 7
DETAILS OF 225'-0" CONTINUOUS PLATE GIRDER UNIT
HIGHWAY 13 OVER I-40

ROUTE SEC.

ARKANSAS STATE HIGHWAY COMMISSION
LITTLE ROCK, ARK.

DRAWN BY:	CWT	DATE:	FEB. 2022	FILENAME:	b061613x2_s3.dgn
CHECKED BY:	ABH	DATE:	OCT. 2022	SCALE:	As Shown
DESIGNED BY:	RAK	DATE:	FEB. 2022		

BRIDGE NO. 07606 DRAWING NO. 65954

abhall 6/29/2023 1:37:34 PM
WORKSPACE:ARDOT Bridge (2019)
L:\2021\21T01028 - ARDOT 061613 I-40 Strs and Apprs\Drawings\b061613x2_S403_SX.dgn
REVISED DATE:

DATE REVISED	DATE FILMED	DATE REVISED	DATE FILMED	FED. ROAD DIST. NO.	STATE	FED. AID PROJ. NO.	SHEET NO.	TOTAL SHEETS
				6	ARK.			
				JOB NO.		061613	146	215
				(I) 07606		225'-0" UNIT		65955

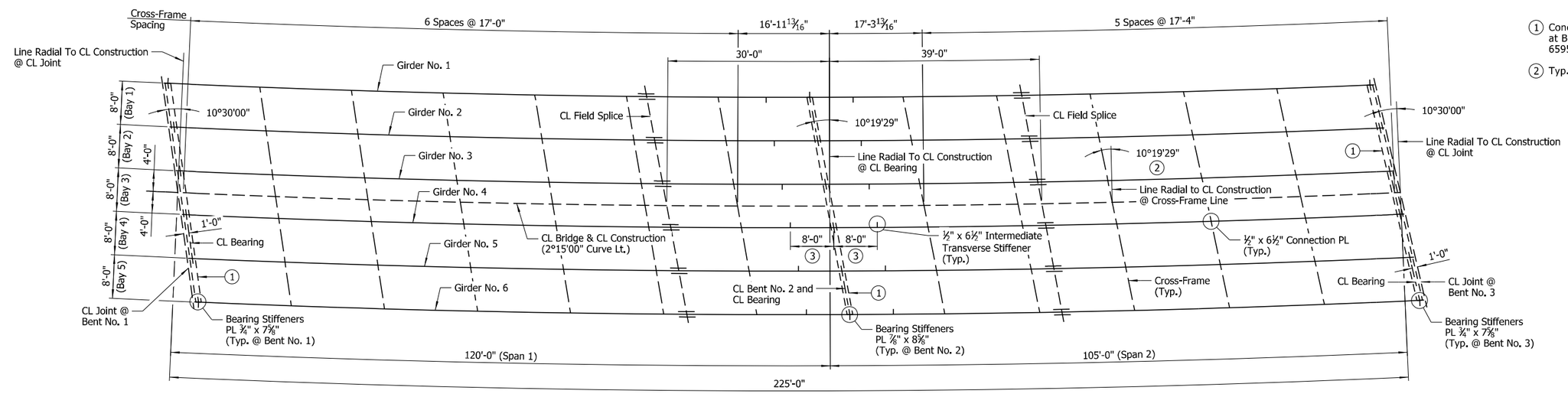

FRAMING PLAN

Scale: 3/32" = 1'-0"

(1) Concrete Diaphragm - Typical as shown at Bents 1-3. For details, see Dwg. Nos. 65953 and 65954.

(2) Typ. All Cross-Frame Lines

(3) Measured along CL Girder (Typ. All Girders)

(4) CL Required Flange Shop Splice (Typ. Top & Bottom)

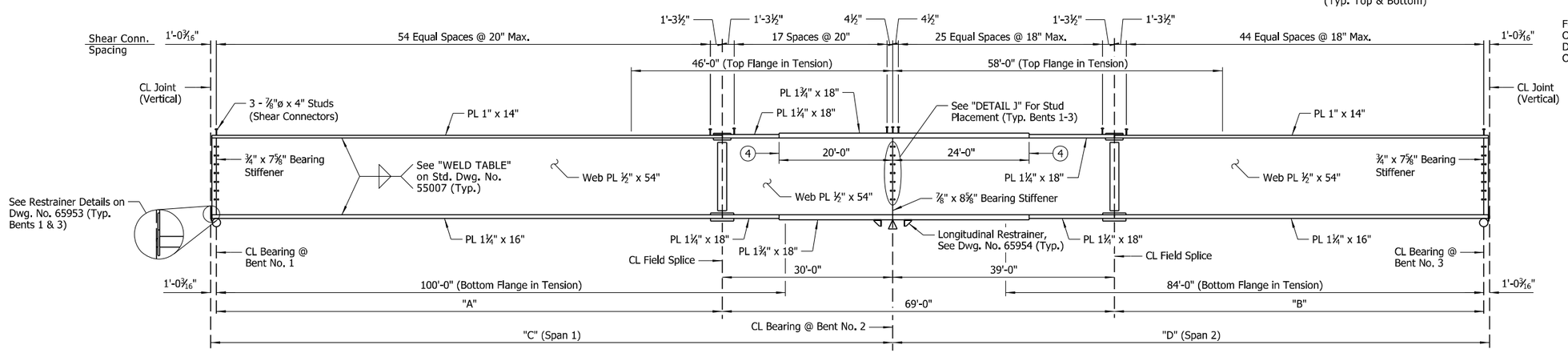

GIRDER ELEVATION

(Dimensions Measured Along CL Girder)
No Scale

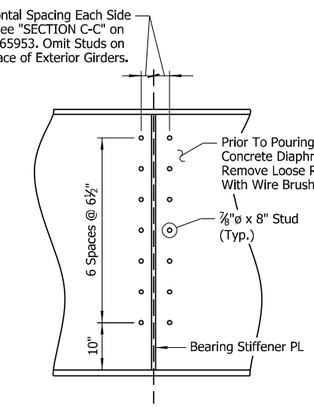

DETAIL J

No Scale

NOTES:
For "GENERAL NOTES", see Std. Dwg. No. 55006.

All structural steel shall be ASTM A709, Gr. 50 unless noted otherwise and shall be paid for at the unit price per pound bid for "STRUCTURAL STEEL IN PLATE GIRDER SPANS (A709, GR. 50)".

Bolted Field Splices shown may be eliminated or shop welded splices may be substituted with approval of the Engineer. Payment will be made on the basis of the Plan Quantities.

For "DETAILS OF WELDED SPLICES FOR PLATE GIRDERS", "SHEAR CONNECTOR DETAIL" and "SCREED RAIL SUPPORT FOR PLATE GIRDERS", see Std. Dwg. No. 55007.

NOTES:
The erection of the structural steel shall be performed according to a plan permitting the steel to be erected plumb with bolts tightened while the steel is as close as possible to the no-load condition, so that the bolt holes can be aligned. This requirement may necessitate the use of large capacity cranes, temporary shoring or jacking frames.

The Contractor shall ensure that girders are stable throughout the erection process. The Contractor will be responsible for providing temporary bracing or stiffening devices to accommodate handling stresses in individual members or segments of the structure during erection.

For field splice details, see Dwg. No. 65957.

For cross-frame, stiffener and connection plate details, see Dwg. No. 65958.

All girders are oriented along curves concentric with CL Construction.

Unless noted otherwise, all longitudinal dimensions in "FRAMING PLAN" are measured along CL Construction.

TABLE OF VARIABLES

Girder No.	"A"	"B"	"C"	"D"
1	88'-1¼"	64'-1⅛"	119'-1 7/16"	104'-1 5/16"
2	88'-5½"	64'-5 7/16"	119'-5 11/16"	104'-5⅝"
3	88'-9 11/16"	64'-9 11/16"	119'-9⅞"	104'-9⅞"
4	89'-1 15/16"	65'-1 15/16"	120'-2⅛"	105'-2⅛"
5	89'-6⅛"	65'-6 3/16"	120'-6 5/16"	105'-6⅜"
6	89'-10⅜"	65'-10 7/16"	120'-10 9/16"	105'-10⅝"

STATE OF ARKANSAS
LICENSED PROFESSIONAL ENGINEER
No.14498
ADAM B. HALL

DIGITALLY SIGNED 6/30/2023
BRIDGE ENGINEER

SHEET 4 OF 7
DETAILS OF 225'-0" CONTINUOUS PLATE GIRDER UNIT
HIGHWAY 13 OVER I-40

ROUTE SEC.

ARKANSAS STATE HIGHWAY COMMISSION
LITTLE ROCK, ARK.

DRAWN BY: HEW DATE: FEB. 2022 FILENAME: b061613x2_s4.dgn
CHECKED BY: ABH DATE: NOV. 2022 SCALE: As Shown
DESIGNED BY: DSB DATE: FEB. 2022
BRIDGE NO. 07606 DRAWING NO. 65955

abhall 6/29/2023 1:37:35 PM
WORKSPACE: ARDOT Bridge (2019)
L:\2021\21T01028 - ARDOT 061613 I-40 Strs and Apprs\Drawings\b061613x2_S404_SF.dgn
REVISED DATE:

DATE REVISED	DATE FILMED	DATE REVISED	DATE FILMED	FED. ROAD DIST. NO.	STATE	FED. AID PROJ. NO.	SHEET NO.	TOTAL SHEETS
				6	ARK.			
				JOB NO.		061613	147	215
				07606		225'-0" UNIT		65956

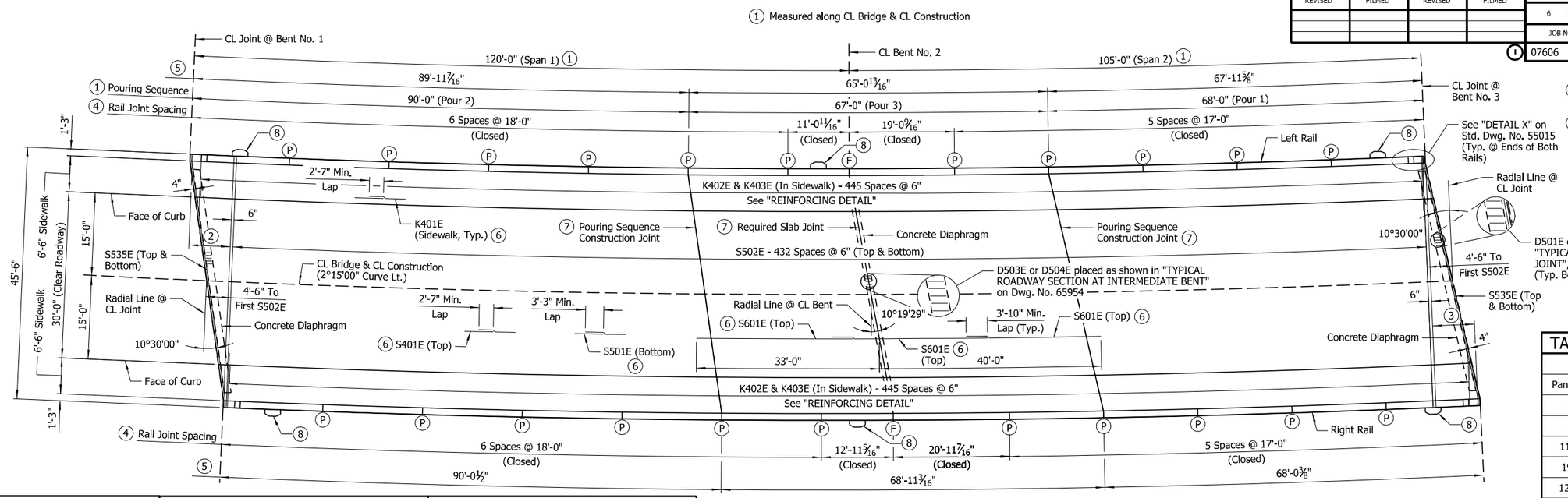

TABLE OF VARIABLES

Closed Rail Panels		
Panel Length	A	R4XXE
18'-0"	35	05
17'-0"	33	06
11'-0 11/16"	22	07
19'-0 9/16"	38	08
12'-11 5/16"	25	09
20'-11 7/16"	41	10

BAR LIST

MARK	NO. REQ'D	LENGTH	"A"	P.D.
D501E	104	10'-3"	4'-5"	2½"
D502E	18	8'-7"	3'-7"	2½"
D503E	50	10'-4"	4'-5"	2½"
D504E	15	8'-8"	3'-7"	2½"
D601E	44	9'-8"	2'-4"	4½"
D602E	8	15'-1"	7'-9"	4½"
D701E	210	7'-7"		Str.
H401E	12	2'-11"		2"
H402E	4	3'-7"		2"
R401E	902	6'-4"		2½"
R402E	88	5'-6"		Str.
R404E	902	5'-0"		3", 3¾"
R405E	96	17'-8"		Str.
R406E	80	16'-8"		Str.
R407E	8	10'-8"		Str.
R408E	8	18'-8"		Str.
R409E	8	12'-7"		Str.
R410E	8	20'-7"		Str.
S401E	282	40'-0"		Str.
S501E	192	59'-2"		Str.
S502E	866	45'-2"		Str.
S503E To S518E	2 Each	2'-6" To 43'-0"		Str.
S519E To S534E	2 Each	2'-2" To 42'-8"		Str.
S535E	4	45'-11"		3¾"

BAR LIST

MARK	NO. REQ'D	LENGTH	"A"	P.D.
S601E	138	26'-11"		Str.
K401E	96	40'-0"		Str.
K402E	894	7'-3"		Str.
K403E	892	5'-10"		3"
K404E	1	7'-4"	5'-4"	3"
K405E	1	5'-1"		Str.

BAR LIST

MARK	NO. REQ'D	LENGTH	"A"	P.D.
K406E	1	7'-9"	4'-11"	3"
K407E	1	5'-1"	2'-3"	3"
K408E	1	5'-5"	2'-7"	3"
K409E	1	8'-1"	5'-3"	3"
K410E	1	4'-11"		Str.
K411E	1	7'-4"	5'-7"	3"
K412E	2	7'-4"	6'-3"	3"

BAR BENDING DIAGRAMS

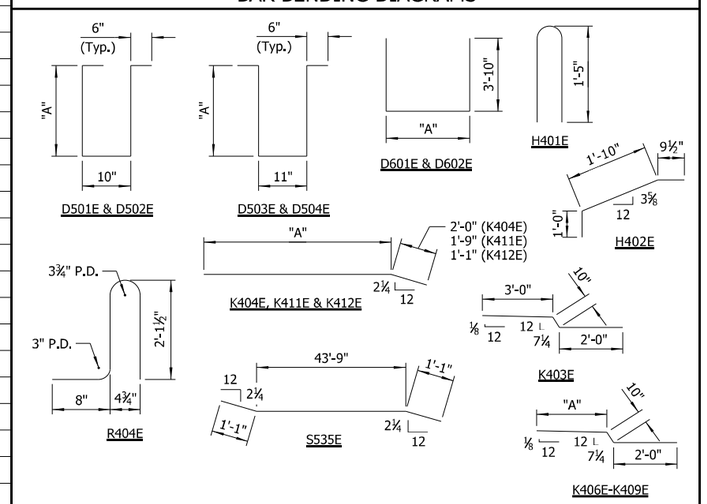

NOTES:
Dimensions of bars are out-to-out.

Bar designations ending with "E" indicate epoxy coated bars.

For bar bending diagram of R401E, see Std. Dwg. No. 55070.

REINFORCING PLAN & SLAB POURING SEQUENCE

Scale: 3/32" = 1'-0"

(4) Measured along inside face of rail. Rail joints designated with symbol (F) shall be stopped 6" from top of sidewalk. All other rail joints with symbol (P) shall be partial-depth joints stopped 16" from top of sidewalk.

(5) Measured along edge of deck

(6) Placed as shown in "TYPICAL ROADWAY SECTION" on Dwg. No. 65952

(7) See "TRANSVERSE SLAB JOINT DETAIL" on Std. Dwg. No. 55007.

(8) Light Pole Support Pedestal (See Dwg. No. 65959 for details and locations)

NOTES:
All concrete diaphragms shall be poured a minimum of 48 hours before the first deck pour.

Pours with the same number may be placed simultaneously or separately. All Pours (1) must be placed before Pour (2) can be placed. All Pours (2) must be placed before Pour (3) can be placed. 48 hours shall elapse between the end of a pour and the start of the next pour. 72 hours shall elapse between adjacent pours.

Concrete in bridge superstructure shall be placed, consolidated and screeded off for the entire pour before any concrete has taken its initial set. This may require the use of a retarding agent.

A minimum of 72 hours shall elapse between the completion of the entire deck slab and the start of a sidewalk pour. A minimum of 72 hours shall elapse between the completion of the entire sidewalk and the start of a railing pour. Any sidewalk pours made before the entire slab unit has been placed must be approved by the Engineer. Any railing pours made before the entire sidewalk has been placed must be approved by the Engineer. The Contractor must obtain approval from the Engineer for any deviations from the pouring sequence shown.

Required slab joints and pouring sequence joints shall align with rail joints as shown.

For "GENERAL NOTES", see Std. Dwg. No. 55006.

Unless noted otherwise, spacing shown for all transverse reinforcing is measured along CL Bridge & CL Construction. All transverse reinforcing shall be placed on lines radial to CL Bridge & CL Construction.

All longitudinal lines and longitudinal slab reinforcing shall be placed along curves concentric with CL Bridge & CL Construction.

For Left Rail and Right Rail details, see Std. Dwg. No. 65960.

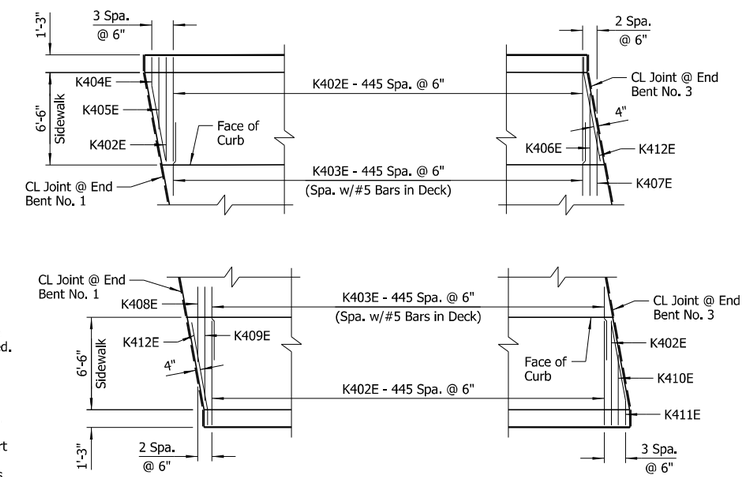

REINFORCING DETAIL

Scale: 3/16" = 1'-0"

STATE OF ARKANSAS
LICENSED PROFESSIONAL ENGINEER
No.14498
ADAM B. HALL

DIGITALLY SIGNED 6/30/2023
BRIDGE ENGINEER

SHEET 5 OF 7
DETAILS OF 225'-0" CONTINUOUS
PLATE GIRDER UNIT
HIGHWAY 13 OVER I-40

ROUTE SEC.

ARKANSAS STATE HIGHWAY COMMISSION

LITTLE ROCK, ARK.

DRAWN BY:	CWT	DATE:	FEB. 2022	FILENAME:	b061613x2_s5.dgn
CHECKED BY:	ABH	DATE:	NOV. 2022	SCALE:	As Shown
DESIGNED BY:	RAK	DATE:	FEB. 2022		

BRIDGE NO. 07606 DRAWING NO. 65956

abhall 6/29/2023 1:37:36 PM
WORKSPACE: ARDOT Bridge (2019)
L:\2021\21T01028 - ARDOT 061613 I-40 Strs and Apprs\Drawings\b061613x2_S405_SB.dgn
REVISED DATE:

DATE REVISED	DATE FILMED	DATE REVISED	DATE FILMED	FED. ROAD DIST. NO.	STATE	FED. AID PROJ. NO.	SHEET NO.	TOTAL SHEETS
				6	ARK.			
				JOB NO.		061613	148	215
				07606		225'-0" UNIT		65957

TABLE OF DEAD LOAD DEFLECTIONS (INCHES)

	Point Of Deflection	Girder 1			Girder 2			Girder 3		
		Structural Steel	Structural Steel + Slab	Structural Steel + Slab + Sidewalk + Rail	Structural Steel	Structural Steel + Slab	Structural Steel + Slab + Sidewalk + Rail	Structural Steel	Structural Steel + Slab	Structural Steel + Slab + Sidewalk + Rail
SPAN NO. 1	1.0	0.000	0.000	0.000	0.000	0.000	0.000	0.000	0.000	0.000
	1.1	0.170	0.781	0.953	0.178	0.835	0.977	0.184	0.872	0.988
	1.2	0.312	1.433	1.749	0.325	1.522	1.780	0.336	1.590	1.802
	1.3	0.407	1.872	2.286	0.426	1.995	2.333	0.440	2.082	2.362
	1.4	0.448	2.062	2.521	0.468	2.195	2.569	0.484	2.291	2.601
	1.5	0.433	1.994	2.442	0.452	2.121	2.486	0.467	2.214	2.516
	1.6	0.368	1.696	2.083	0.383	1.800	2.114	0.396	1.879	2.138
	1.7	0.266	1.232	1.518	0.278	1.307	1.540	0.287	1.364	1.555
	1.8	0.152	0.708	0.876	0.160	0.756	0.895	0.165	0.787	0.901
	1.9	0.059	0.278	0.344	0.061	0.291	0.346	0.063	0.304	0.350
	2.0	0.000	0.000	0.000	0.000	0.000	0.000	0.000	0.000	0.000
SPAN NO. 2	2.1	-0.002	-0.028	-0.025	-0.002	-0.026	-0.029	-0.003	-0.027	-0.036
	2.2	0.027	0.085	0.125	0.028	0.098	0.119	0.028	0.103	0.105
	2.3	0.074	0.280	0.373	0.076	0.308	0.366	0.078	0.324	0.350
	2.4	0.126	0.509	0.661	0.131	0.554	0.654	0.134	0.580	0.636
	2.5	0.165	0.685	0.877	0.172	0.744	0.875	0.176	0.780	0.860
	2.6	0.183	0.772	0.981	0.191	0.838	0.983	0.196	0.877	0.969
	2.7	0.173	0.738	0.934	0.181	0.801	0.938	0.186	0.839	0.928
	2.8	0.136	0.584	0.737	0.142	0.633	0.741	0.146	0.663	0.734
	2.9	0.075	0.323	0.407	0.078	0.349	0.409	0.081	0.368	0.407
	3.0	0.000	0.000	0.000	0.000	0.000	0.000	0.000	0.000	0.000

TABLE OF DEAD LOAD DEFLECTIONS (INCHES) CONTINUED

	Point Of Deflection	Girder 4			Girder 5			Girder 6		
		Structural Steel	Structural Steel + Slab	Structural Steel + Slab + Sidewalk + Rail	Structural Steel	Structural Steel + Slab	Structural Steel + Slab + Sidewalk + Rail	Structural Steel	Structural Steel + Slab	Structural Steel + Slab + Sidewalk + Rail
SPAN NO. 1	1.0	0.000	0.000	0.000	0.000	0.000	0.000	0.000	0.000	0.000
	1.1	0.188	0.889	1.008	0.191	0.893	1.046	0.193	0.891	1.087
	1.2	0.343	1.622	1.839	0.348	1.631	1.910	0.354	1.630	1.989
	1.3	0.449	2.127	2.415	0.456	2.138	2.504	0.463	2.134	2.604
	1.4	0.495	2.343	2.663	0.502	2.355	2.761	0.509	2.349	2.869
	1.5	0.478	2.265	2.577	0.486	2.280	2.677	0.491	2.269	2.775
	1.6	0.405	1.923	2.192	0.412	1.937	2.279	0.417	1.930	2.366
	1.7	0.294	1.397	1.595	0.299	1.408	1.662	0.303	1.405	1.726
	1.8	0.169	0.806	0.924	0.172	0.814	0.965	0.174	0.813	1.001
	1.9	0.065	0.313	0.361	0.066	0.318	0.378	0.067	0.319	0.392
	2.0	0.000	0.000	0.000	0.000	0.000	0.000	0.000	0.000	0.000
SPAN NO. 2	2.1	-0.003	-0.030	-0.040	-0.004	-0.036	-0.040	-0.005	-0.045	-0.043
	2.2	0.028	0.100	0.102	0.027	0.089	0.110	0.024	0.067	0.109
	2.3	0.078	0.322	0.348	0.076	0.304	0.365	0.073	0.273	0.374
	2.4	0.134	0.581	0.638	0.133	0.560	0.666	0.130	0.520	0.685
	2.5	0.177	0.784	0.866	0.176	0.760	0.899	0.174	0.717	0.928
	2.6	0.197	0.883	0.978	0.197	0.860	1.015	0.194	0.816	1.046
	2.7	0.187	0.845	0.937	0.187	0.825	0.973	0.185	0.786	1.003
	2.8	0.148	0.669	0.742	0.147	0.653	0.770	0.146	0.624	0.793
	2.9	0.082	0.372	0.413	0.081	0.361	0.426	0.081	0.347	0.440
	3.0	0.000	0.000	0.000	0.000	0.000	0.000	0.000	0.000	0.000

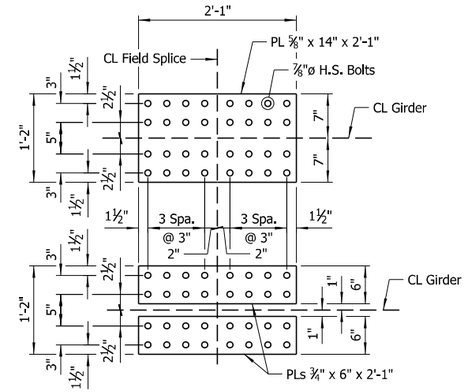

TOP FLANGE FIELD SPLICE

Scale: 1" = 1'-0"

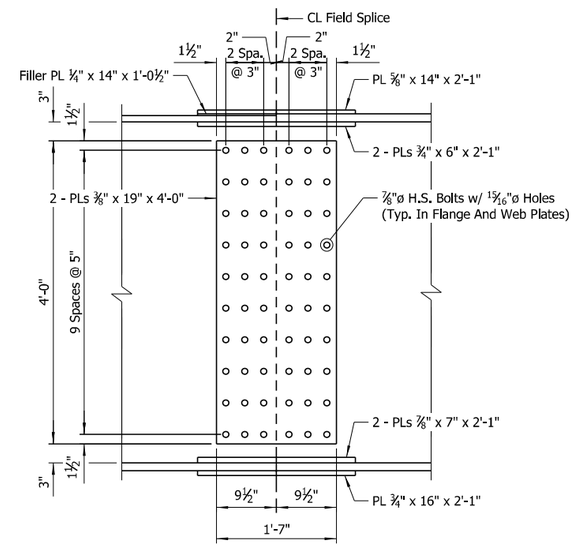

ELEVATION OF FIELD SPLICE

Scale: 1" = 1'-0"

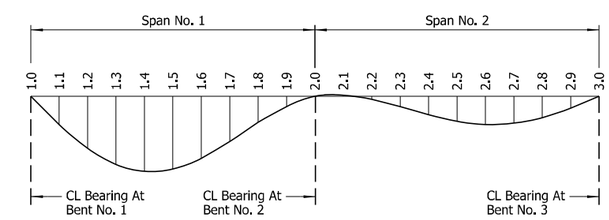

DEAD LOAD DEFLECTION DIAGRAM

No Scale

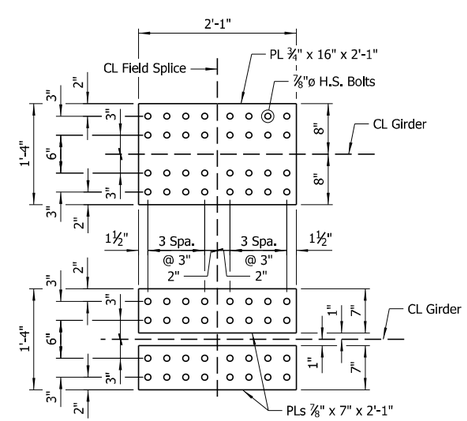

BOTTOM FLANGE FIELD SPLICE

Scale: 1" = 1'-0"

NOTES:
Camber for dead load deflection plus vertical curve +/- ¼" tolerance. Deflections shown are along CL Girder from the plane perpendicular to the web extending from CL Bearing to CL Bearing. Vertical curve corrections are not included. Negative sign (-) indicates point above chord.

Dead load deflections shown include an assumed loading of 18 psf to account for stay-in-place metal deck forms.

Revision to the deflection tables may be necessary upon review of the Contractor's submitted forming details.

STATE OF ARKANSAS
LICENSED PROFESSIONAL ENGINEER
No.14498
ADAM B. HALL

DIGITALLY SIGNED 6/30/2023
BRIDGE ENGINEER

SHEET 6 OF 7
DETAILS OF 225'-0" CONTINUOUS
PLATE GIRDER UNIT
HIGHWAY 13 OVER I-40

ROUTE SEC.

ARKANSAS STATE HIGHWAY COMMISSION

LITTLE ROCK, ARK.

DRAWN BY: HEW DATE: FEB. 2022 FILENAME: b061613x2_s6.dgn
CHECKED BY: ABH DATE: NOV. 2022 SCALE: As Shown
DESIGNED BY: DSB DATE: FEB. 2022
BRIDGE NO. 07606 DRAWING NO. 65957

abhall 6/29/2023 1:37:38 PM
WORKSPACE: ARDOT Bridge (2019)
L:\2021\21T01028 - ARDOT 061613 I-40 Strs and Apprs\Drawings\b061613x2_S406_DF.dgn
REVISED DATE:

DATE REVISED	DATE FILMED	DATE REVISED	DATE FILMED	FED. ROAD DIST. NO.	STATE	FED. AID PROJ. NO.	SHEET NO.	TOTAL SHEETS
				6	ARK.			
				JOB NO.		061613	149	215
				(1) 07606		225'-0" UNIT		65958

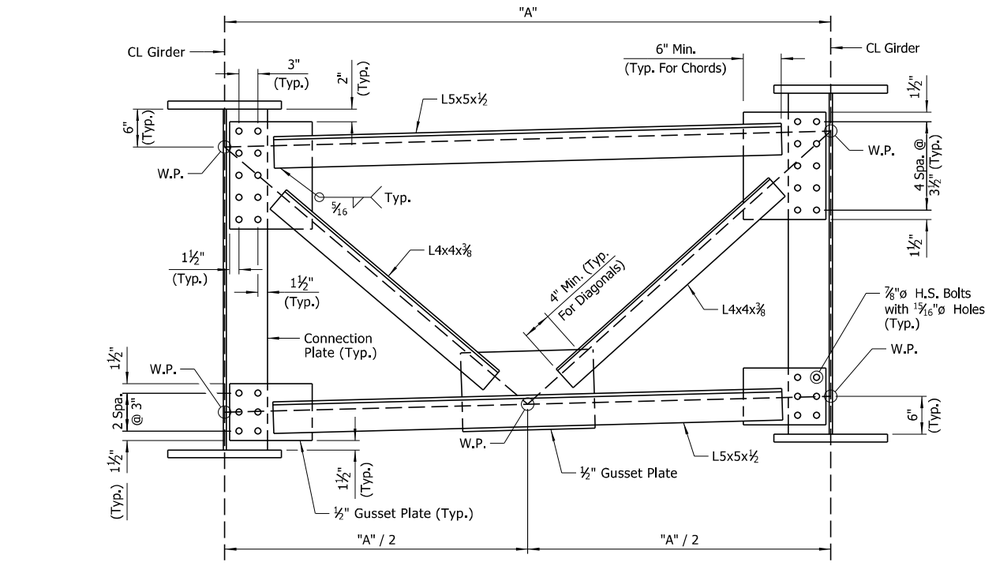

CROSS-FRAME DETAIL

No Scale

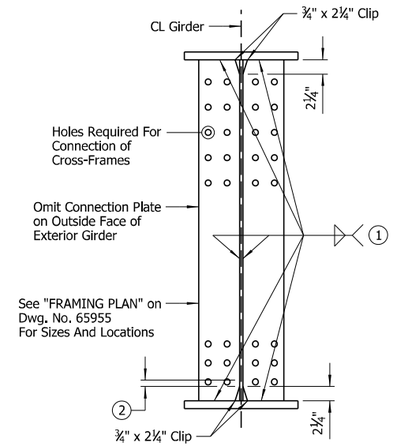

CONNECTION PLATE DETAIL

No Scale

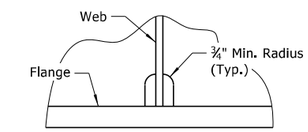

Height and width of clip shall be as noted in other details.

ALTERNATE CLIP DETAIL

(For Bearing Stiffeners, Intermediate Transverse Stiffeners and Cross-Frame Connection Plates)
No Scale

NOTES:
All field connections shall be bolted with ⅞"ø H.S. bolts using 15/16"ø open holes.

Bearing Stiffeners shall be fabricated to be vertical in their final positions.

TABLE OF VARIABLES	
Bay No(s).	"A"
1	8'-1⅝"
2-5	8'-1 9/16"

(1) See "WELD TABLE" on Std. Dwg. No. 55007 for minimum weld size.

(2) Stop weld ¼" to 1" from end of clip (Typ.)

(3) If permanent deck forms are used, the Fabricator shall clip the plate as necessary to accommodate the deck form supports.

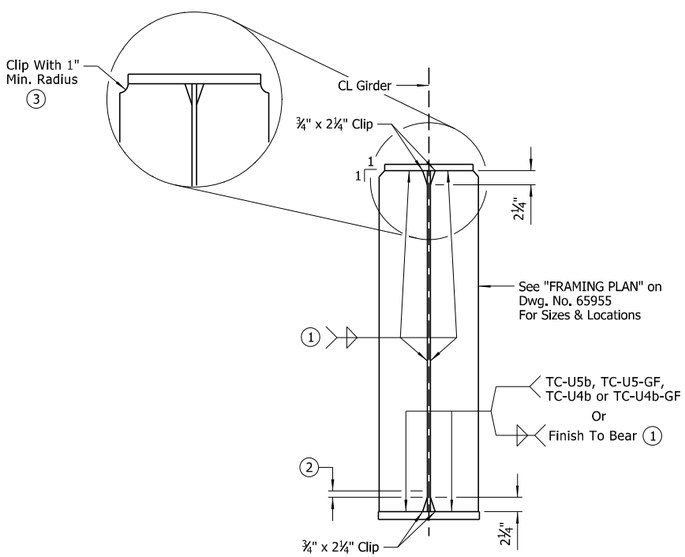

AT BENTS 1 & 3

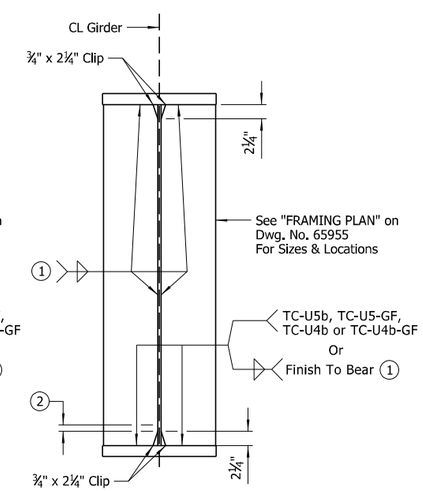

AT BENT 2

BEARING STIFFENER DETAIL

No Scale

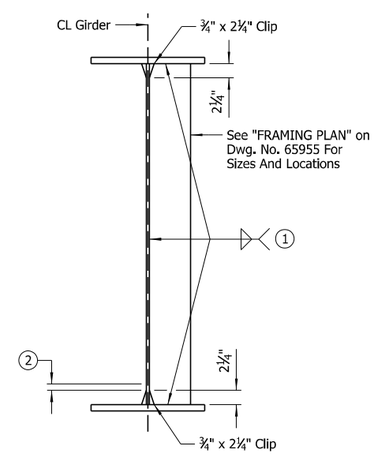

INTERMEDIATE TRANSVERSE STIFFENER DETAIL

No Scale

STATE OF ARKANSAS
LICENSED PROFESSIONAL ENGINEER
No.14498
ADAM B. HALL

DIGITALLY SIGNED 6/30/2023
BRIDGE ENGINEER

SHEET 7 OF 7
DETAILS OF 225'-0" CONTINUOUS PLATE GIRDER UNIT
HIGHWAY 13 OVER I-40

ROUTE SEC.

ARKANSAS STATE HIGHWAY COMMISSION
LITTLE ROCK, ARK.

DRAWN BY:	HEW	DATE:	FEB. 2022	FILENAME:	b061613x2_s7.dgn
CHECKED BY:	ABH	DATE:	NOV. 2022	SCALE:	As Shown
DESIGNED BY:	DSB	DATE:	FEB. 2022		

BRIDGE NO. 07606 DRAWING NO. 65958

abhall 7/13/2023 8:53:13 AM
WORKSPACE: ARDOT Bridge (2019)
L:\2021\21T01028 - ARDOT 061613 I-40 Strs and Apprs\Drawings\b061613x2_S407_SD.dgn
REVISED DATE:

DATE REVISED	DATE FILMED	DATE REVISED	DATE FILMED	FED. ROAD DIST. NO.	STATE	FED. AID PROJ. NO.	SHEET NO.	TOTAL SHEETS
				6	ARK.			
				JOB NO.		061613	150	215
				07605, 07606		COMMON DETAILS		65959

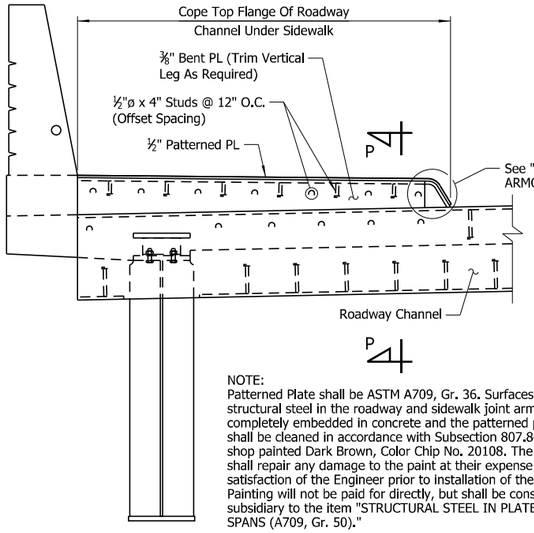

NOTE:
Patterned Plate shall be ASTM A709, Gr. 36. Surfaces of the structural steel in the roadway and sidewalk joint armor not completely embedded in concrete and the patterned plate shall be cleaned in accordance with Subsection 807.84(b) and shop painted Dark Brown, Color Chip No. 20108. The Contractor shall repair any damage to the paint at their expense and to the satisfaction of the Engineer prior to installation of the joint seal. Painting will not be paid for directly, but shall be considered subsidiary to the item "STRUCTURAL STEEL IN PLATE GIRDER SPANS (A709, Gr. 50)."

VIEW S-S

(Shown For Bridge No. 07605; Bridge No. 07606 Similar)
Scale: ¾" = 1'-0"

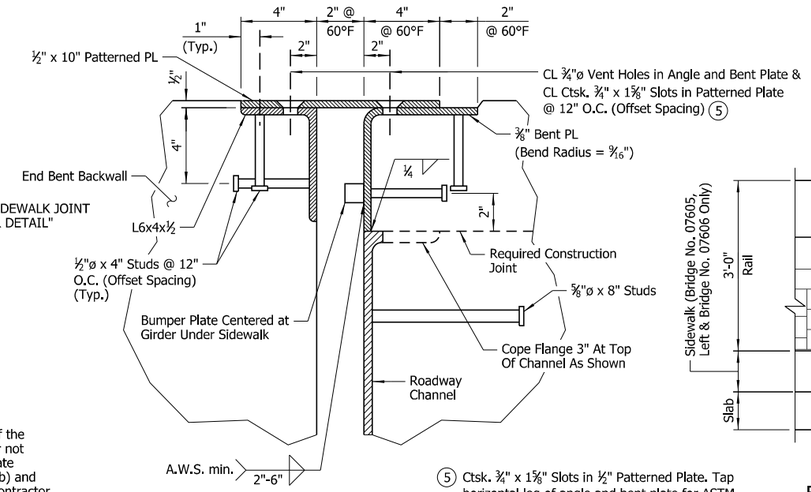

NOTE:
Concrete shall be hand packed under the joint armor in the sidewalk.

SECTION P-P

Scale: 3" = 1'-0"

(5) Ctsk. ¾" x 1⅝" Slots in ½" Patterned Plate. Tap horizontal leg of angle and bent plate for ASTM A449 ⅝"ø flat head cap screws @ 12" O.C. Install screws in the shop and ship as a unit. Screws on span side to be removed, and screws on backwall side to remain in place after erection. See "DETAILS FOR BLOCKING EXPANSION JOINT DEVICE" on Std. Dwg. No. 55008.

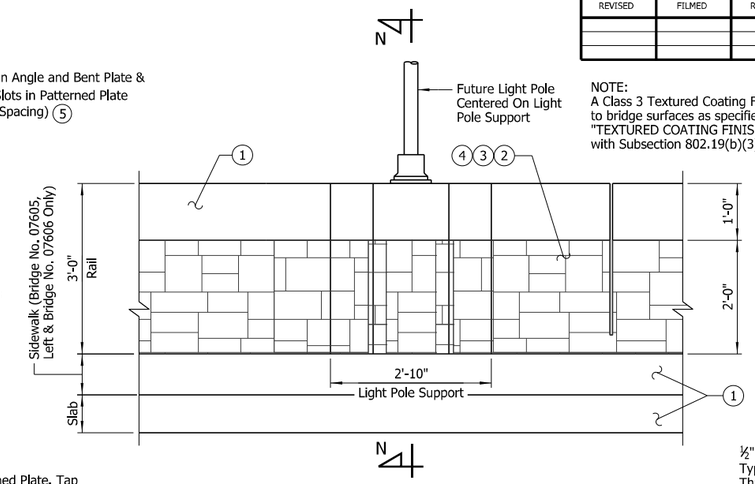

NOTE:
A Class 3 Textured Coating Finish shall be applied to bridge surfaces as specified in Special Provision "TEXTURED COATING FINISH" and in accordance with Subsection 802.19(b)(3).

ELEVATION SHOWING LIGHT POLE SUPPORT PEDESTAL

(Looking At Outside Face Of Rail)
No Scale

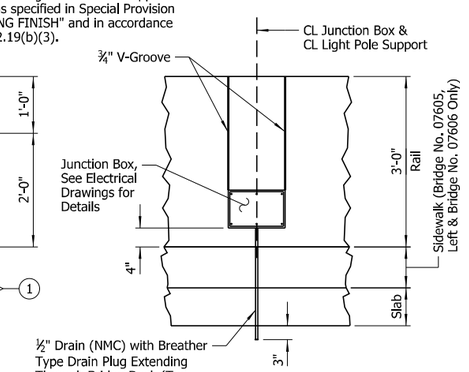

VIEW L-L

No Scale

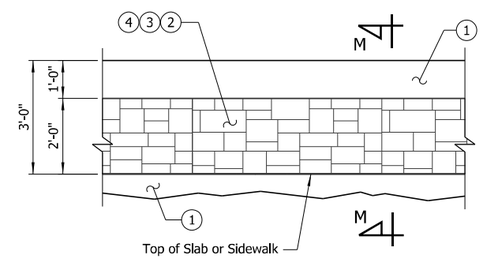

ARCHITECTURAL FINISH ELEVATION

(Showing Outside Face of Left or Right Bridge Rail)
Scale: ½" = 1'-0"

LIGHT POLE SUPPORT LOCATIONS	
STATION	LOCATION
110+58.83	Bridge No. 07605, Left
111+67.35	Bridge No. 07605, Left
112+62.71	Bridge No. 07605, Left
110+76.61	Bridge No. 07605, Right
111+71.24	Bridge No. 07605, Right
112+80.78	Bridge No. 07605, Right
211+17.29	Bridge No. 07606, Left
212+21.71	Bridge No. 07606, Left
213+24.64	Bridge No. 07606, Left
211+25.11	Bridge No. 07606, Right
212+29.70	Bridge No. 07606, Right
213+32.75	Bridge No. 07606, Right

NOTE:
Stations shown are at CL Light Pole Support.

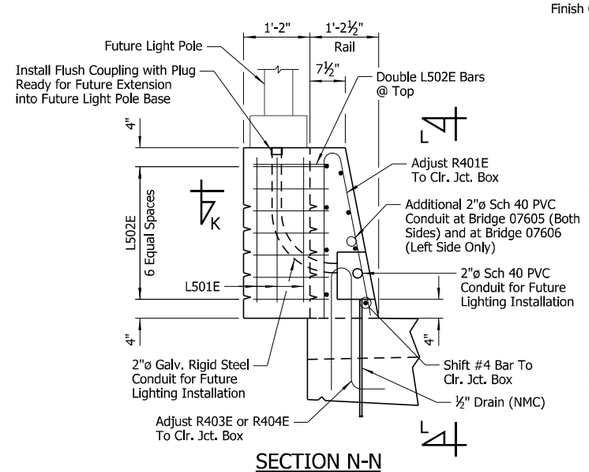

SECTION N-N

(Shown For Section with Sidewalk; Section without Sidewalk Similar)
Scale: ¾" = 1'-0"

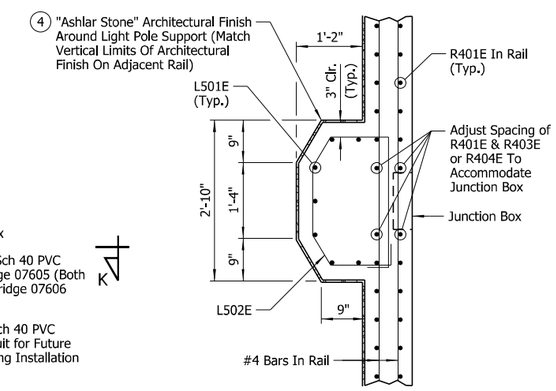

NOTE:
For additional details, see Electrical Drawings.

SECTION K-K

Scale: ¾" = 1'-0"

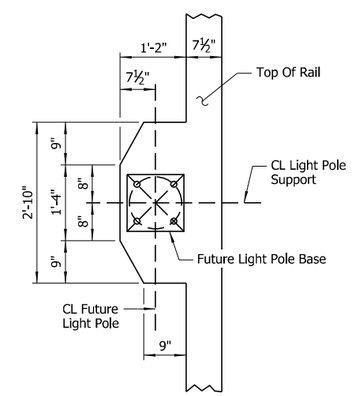

PLAN - LIGHT POLE SUPPORT PEDESTAL

(See "LIGHT POLE SUPPORT LOCATIONS" table for locations)
Scale: ¾" = 1'-0"

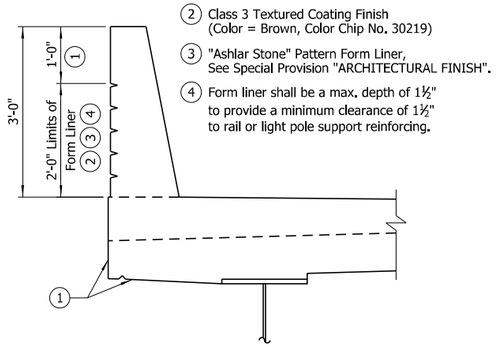

SECTION M-M

(Shown For Section with Sidewalk; Section without Sidewalk Similar)
No Scale

BAR LIST			
MARK	NO. REQ'D	LENGTH	P.D.
L501E	7	2'-8"	Str.
L502E	8	7'-10½"	2½"

BAR BENDING DIAGRAM

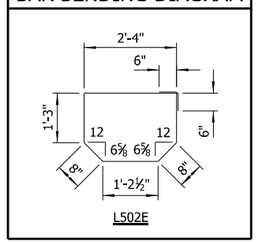

NOTES:
Number of bars shown is for one light pole support pedestal.

Dimensions of bars are out-to-out.

Bar designations ending with "E" indicate epoxy coated bars.

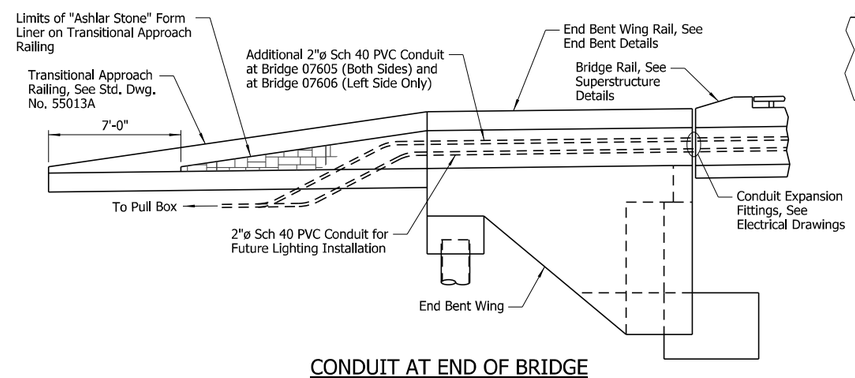

CONDUIT AT END OF BRIDGE

(Elevation View)
Scale: ¼" = 1'-0"

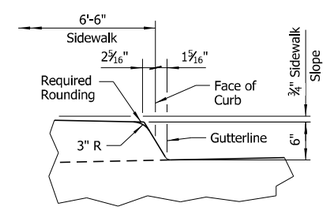

SIDEWALK CURB DETAIL

No Scale

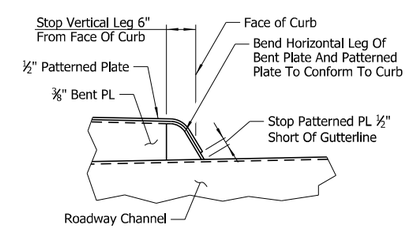

SIDEWALK JOINT ARMOR DETAIL

No Scale

STATE OF ARKANSAS
LICENSED PROFESSIONAL ENGINEER
No.14498
ADAM B. HALL

DIGITALLY SIGNED 6/30/2023
BRIDGE ENGINEER

SHEET 1 OF 2
COMMON SUPERSTRUCTURE DETAILS

ROUTE SEC.

ARKANSAS STATE HIGHWAY COMMISSION

LITTLE ROCK, ARK.

DRAWN BY:	CWT	DATE:	FEB. 2022	FILENAME:	b061613_s1.dgn
CHECKED BY:	ABH	DATE:	NOV. 2022	SCALE:	As Shown
DESIGNED BY:	RAK	DATE:	FEB. 2022		

BRIDGE NO. 07605, 07606 DRAWING NO. 65959

abhall 6/29/2023 1:37:40 PM
WORKSPACE\ARDOT Bridge (2019)
L:\2021\21T01028 - ARDOT 061613 I-40 Strs and Apprs\Drawings\b061613x2_S408_SX.dgn
REVISED DATE:

DATE REVISED	DATE FILMED	DATE REVISED	DATE FILMED	FED. ROAD DIST. NO.	STATE	FED. AID PROJ. NO.	SHEET NO.	TOTAL SHEETS
				6	ARK.			
				JOB NO.		061613	151	215
				07605, 07606		COMMON DETAILS		65960

(F) CL Full-Depth Rail Joint (formed width ¼" to 1" max.) as shown in "REINFORCING PLAN & SLAB POURING SEQUENCE" on Dwg. Nos. 65937 & 65956. Stop 6" from top of sidewalk.

(P) CL Partial-Depth Rail Joint (formed width ¼" to 1" max.) as shown in "REINFORCING PLAN & SLAB POURING SEQUENCE" on Dwg. Nos. 65937 & 65956. Stop 16" from top of sidewalk.

NOTES:
For location of Closed Rail panels, see "REINFORCING PLAN & SLAB POURING SEQUENCE" on Dwg. Nos. 65937 and 65956.

For additional information regarding bridge traffic rails, see Std. Dwg. No. 55070.

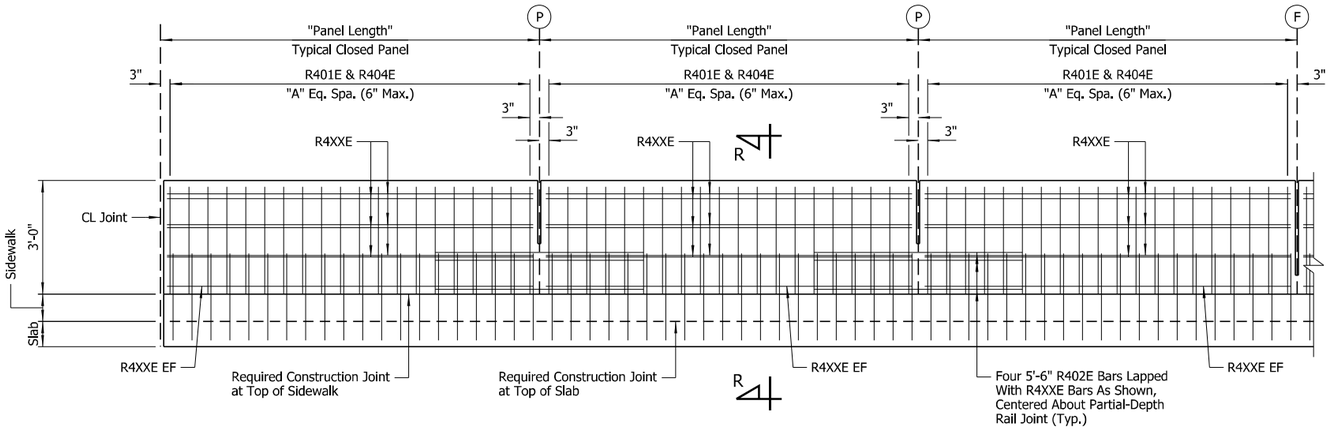

LEGEND

EF = Each Face

ELEVATION - BRIDGE TRAFFIC RAIL (TYPE SSTR36)

(Left Rail, Bridge No. 07605; Both Rails, Bridge No. 07606)
No Scale

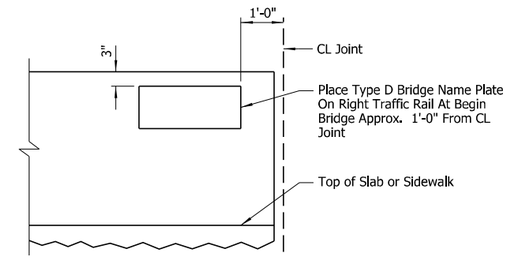

VIEW SHOWING LOCATION OF NAME PLATE

(Showing Inside Face Of Rail)
No Scale

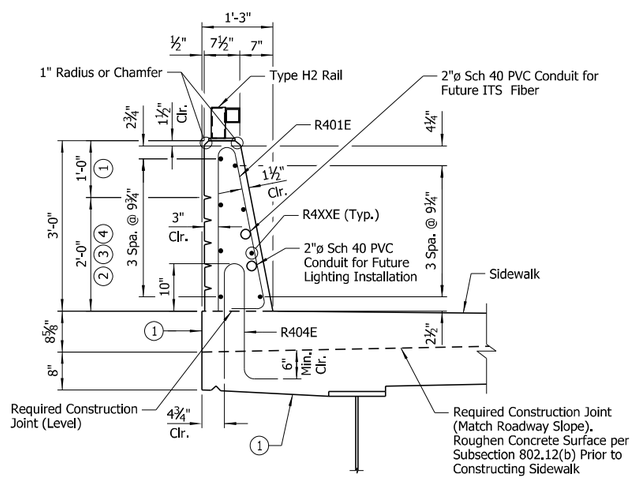

LEFT RAIL

SECTION R-R

(Bridge No. 07605)
Scale: ¾" = 1'-0"

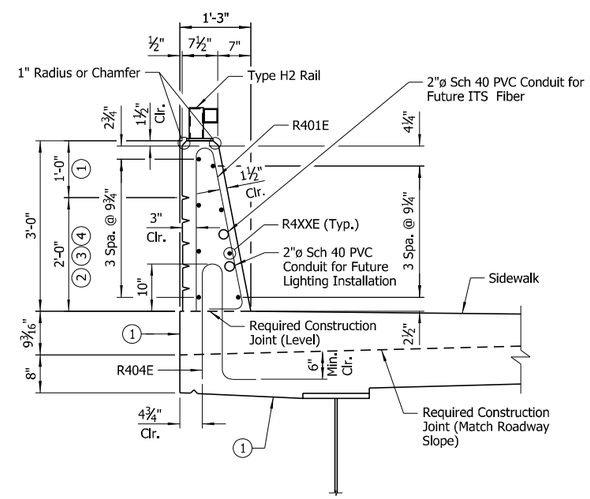

LEFT RAIL

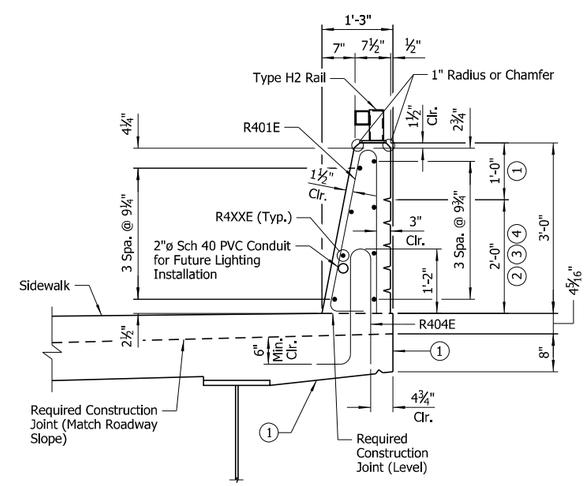

RIGHT RAIL

SECTION R-R

(Bridge No. 07606)
Scale: ¾" = 1'-0"

NOTE:
A Class 3 Textured Coating Finish shall be applied to bridge surfaces as specified in Special Provision "TEXTURED COATING FINISH" and in accordance with Subsection 802.19(b)(3).

(1) Class 3 Textured Coating Finish (Color = Brown, Color Chip No. 33522)

(2) Class 3 Textured Coating Finish (Color = Brown, Color Chip No. 30219)

(3) "Ashlar Stone" Pattern Form Liner. See Special Provision "ARCHITECTURAL FINISH".

(4) Form liner shall be a max. depth of 1½" to provide a min. clearance of 1½" to rail reinforcing.

STATE OF ARKANSAS
LICENSED PROFESSIONAL ENGINEER
No.14498
ADAM B. HALL

DIGITALLY SIGNED 6/30/2023
BRIDGE ENGINEER

SHEET 2 OF 2
COMMON SUPERSTRUCTURE DETAILS

ROUTE SEC.

ARKANSAS STATE HIGHWAY COMMISSION

LITTLE ROCK, ARK.

DRAWN BY: CWT DATE: FEB. 2022 FILENAME: b061613_s2.dgn
CHECKED BY: ABH DATE: NOV. 2022 SCALE: As Shown
DESIGNED BY: RAK DATE: FEB. 2022
BRIDGE NO. 07605, 07606 DRAWING NO. 65960

abhall 6/29/2023 1:37:41 PM
WORKSPACE: ARDOT Bridge (2019)
L:\2021\21T01028 - ARDOT 061613 I-40 Strs and Apprs\Drawings\b061613x2_S409_PT.dgn
REVISED DATE:

DATE REVISED	DATE FILMED	DATE REVISED	DATE FILMED	FED. ROAD DIST. NO.	STATE	FED. AID PROJ. NO.	SHEET NO.	TOTAL SHEETS
				6	ARK.			
				JOB NO.		061613	152	215
				07605		TYPE SPECIAL APP. SLAB		65961

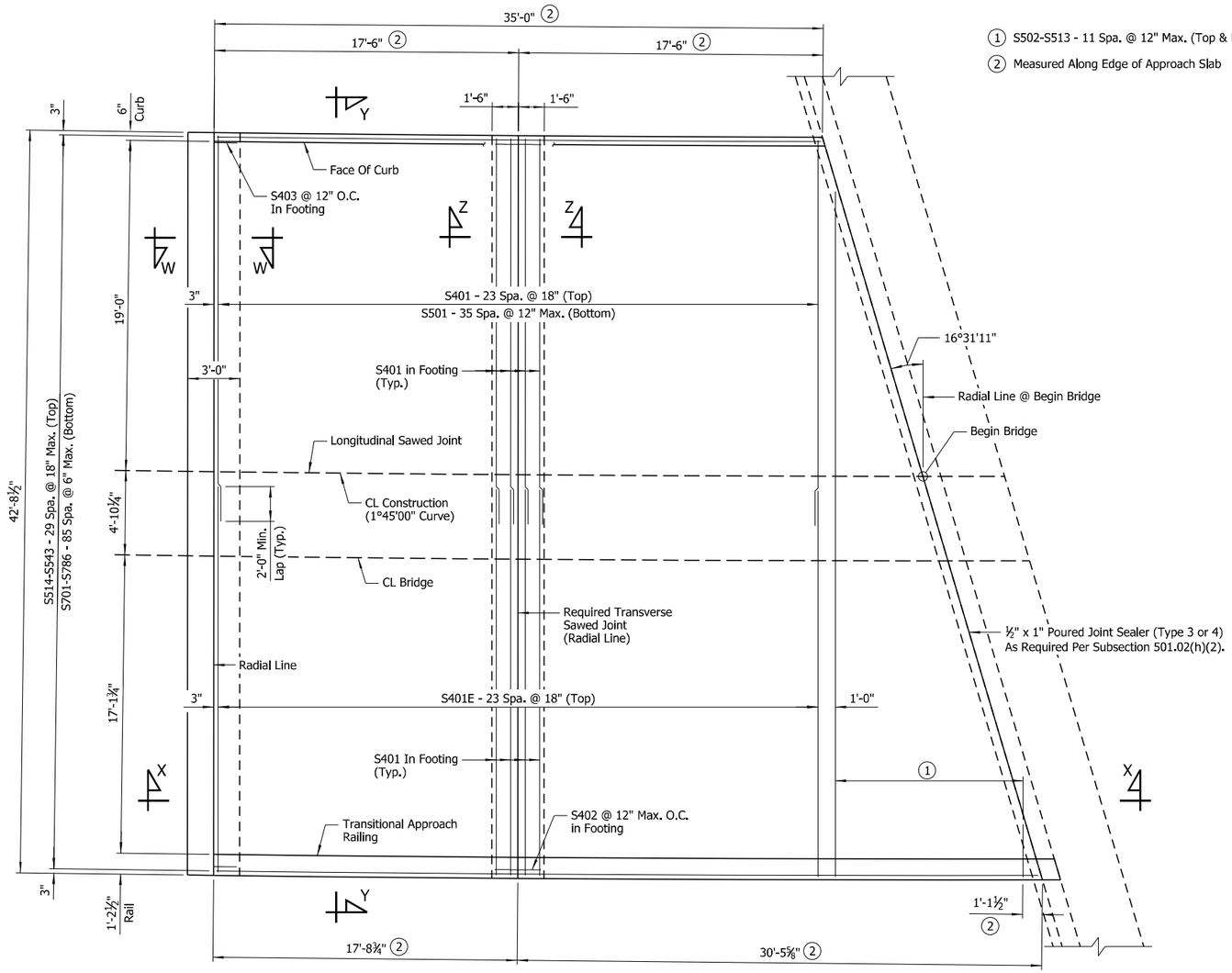

① S502-S513 - 11 Spa. @ 12" Max. (Top & Bottom)

② Measured Along Edge of Approach Slab

PLAN - TYPE 1 SPECIAL APPROACH SLAB

(Begin Bridge No. 07605)
Scale: ¼" = 1'-0"

BAR LIST - TYPE 1 SPECIAL APPROACH SLAB

Mark	No. Req'd.	Length	Pin. Dia.
R401 To R411	1 Each	3'-1" To 4'-0"	2"
R412	38	4'-5"	2"
R413 To R428	1 Each	2'-3" To 3'-7"	2"
R429 To R450	1 Each	3'-8" To 5'-10"	2"
R451	1	5'-11"	2½"
R452	2	22'-8"	Str.
R453	2	20'-4"	Str.
R454	1	18'-11"	Str.
R455	1	20'-4"	Str.
R456	2	22'-8"	Str.
R457	1	10'-6"	Str.
R458	1	11'-4"	Str.
R459	2	48'-8"	Str.
S401	64	22'-3"	Str.
S402	43	10'-4"	2"
S403	43	7'-9"	2"
S501	36	42'-5"	Str.
S502 To S513	2 Each	3'-0" To 40'-1"	Str.
S514 To S543	1 Each	34'-8" To 47'-9"	Str.
S701 To S786	1 Each	34'-8" To 47'-9"	Str.

BAR BENDING DIAGRAMS

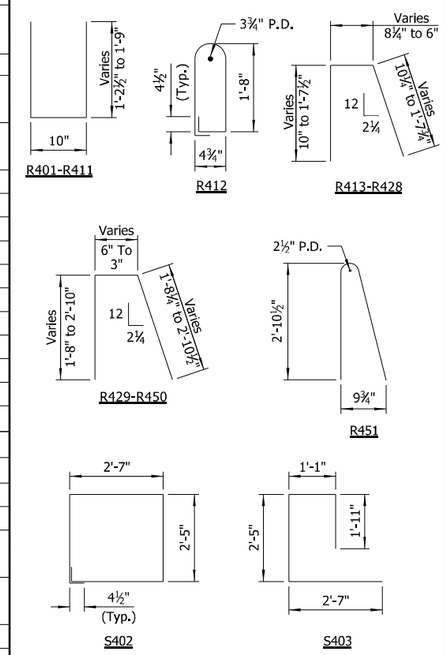

NOTES:
Dimensions of bars in bending diagram are out-to-out.

Number of bars shown is for one Type 1 Special Approach Slab.

NOTES:
All transverse reinforcing shall be placed on lines radial to CL Construction. Spacing is measured along CL Construction.

All longitudinal lines and longitudinal slab reinforcing shall be placed along curves concentric with CL Construction.

Top of approach slab shall be given a tine finish as specified for final finishing in Subsection 802.19 for Class 5 Tined Bridge Roadway Surface Finish.

NOTES:
For "SECTION W-W", "SECTION X-X", "SECTION Z-Z", "DETAILS OF LONGITUDINAL CONSTRUCTION JOINT" & "GENERAL NOTES", see Dwg. No. 65967.

For "SECTION Y-Y" & details of Transitional Approach Railing, see Dwg. No. 65963.

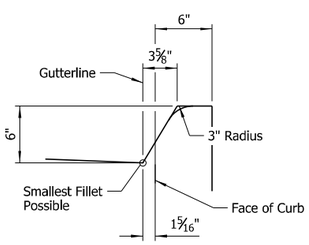

TYPICAL CURB DETAIL

(Left Side Only)
Scale: 1½" = 1'-0"

QUANTITIES

(FOR INFORMATION ONLY)

TYPE	Class S(AE) Concrete	Reinforcing Steel (Gr. 60)
Type 1 Special	100.08 Cu. Yds.	12,573 lb.

STATE OF ARKANSAS
LICENSED PROFESSIONAL ENGINEER
No.14498
ADAM B. HALL

DIGITALLY SIGNED 6/30/2023
BRIDGE ENGINEER

SHEET 1 OF 7
DETAILS OF TYPE SPECIAL APPROACH SLABS

ROUTE SEC.

ARKANSAS STATE HIGHWAY COMMISSION

LITTLE ROCK, ARK.

DRAWN BY:	CWT	DATE:	MAR. 2022	FILENAME:	b061613_as1.dgn
CHECKED BY:	DSB	DATE:	MAY 2022	SCALE:	As Shown
DESIGNED BY:	RAK	DATE:	MAR. 2022		

BRIDGE NO. 07605 DRAWING NO. 65961

abhall 6/29/2023 1:37:43 PM
WORKSPACE:ARDOT Bridge (2019)
L:\2021\21T01028 - ARDOT 061613 I-40 Strs and Apprs\Drawings\b061613x2_S501_AS.dgn
REVISED DATE:

DATE REVISED	DATE FILMED	DATE REVISED	DATE FILMED	FED. ROAD DIST. NO.	STATE	FED. AID PROJ. NO.	SHEET NO.	TOTAL SHEETS
				6	ARK.			
				JOB NO.		061613	153	215
				07605		TYPE SPECIAL APP. SLAB		65962

(1) S502-S512 - 10 Spa. @ 12" Max. (Top & Bottom)

(2) Measured Along Edge of Approach Slab

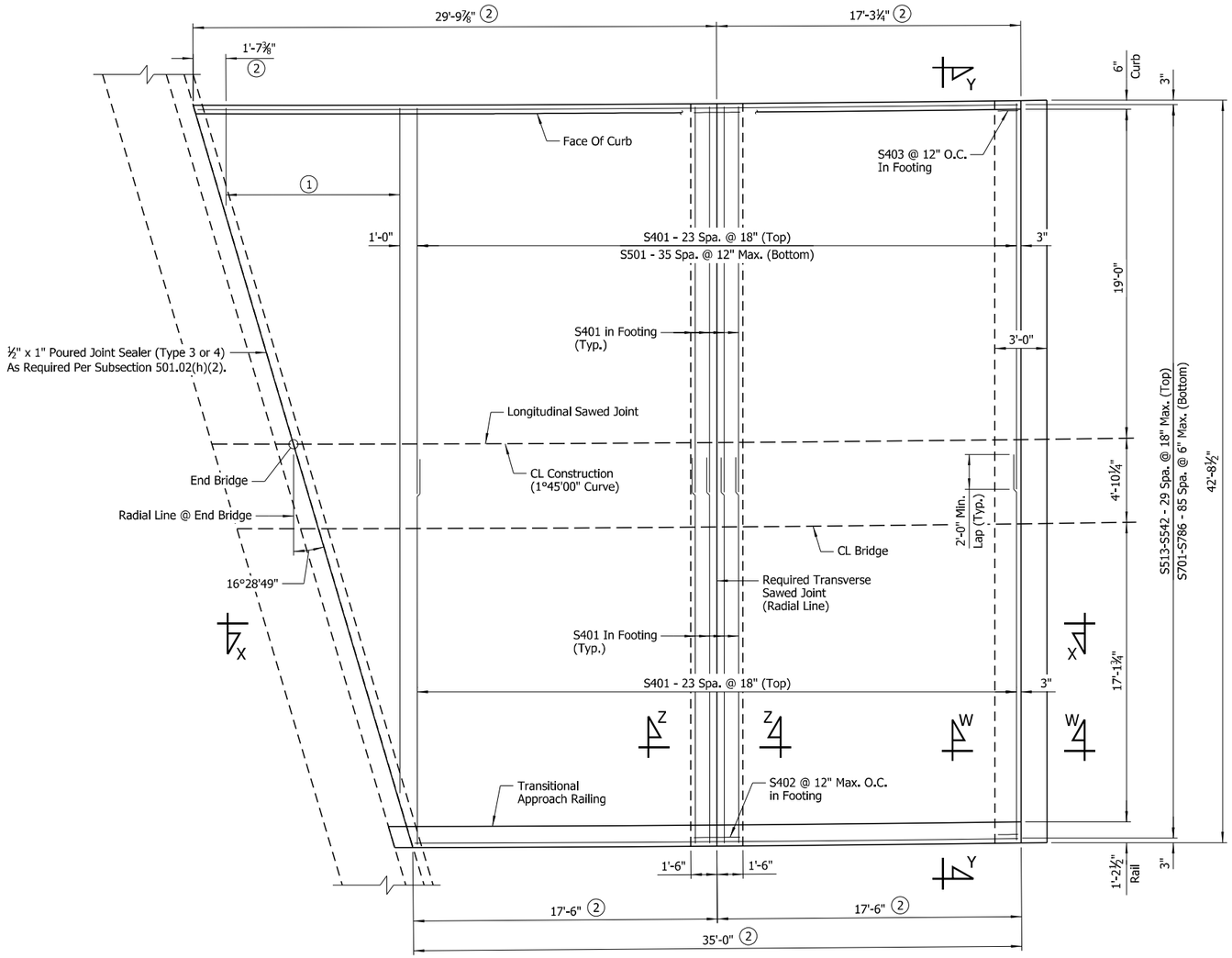

PLAN - TYPE 2 SPECIAL APPROACH SLAB

(End Bridge No. 07605)
Scale: ¼" = 1'-0"

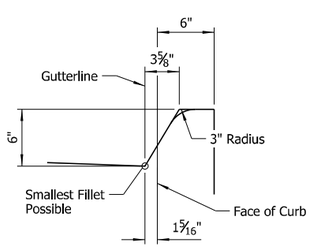

TYPICAL CURB DETAIL

(Left Side Only)
Scale: 1½" = 1'-0"

BAR LIST - TYPE 2 SPECIAL APPROACH SLAB

Mark	No. Req'd.	Length	Pin. Dia.
R401 To R408	1 Each	3'-1" To 4'-1"	2"
R409	28	4'-5"	2"
R410 To R419	1 Each	2'-3" To 3'-5"	2"
R420 To R437	1 Each	3'-6" To 5'-10"	2"
R438	1	5'-11"	2½"
R439	2	18'-2"	Str.
R440	2	13'-3"	Str.
R441	1	13'-11"	Str.
R442	1	15'-0"	Str.
R443	2	18'-2"	Str.
R444	1	6'-1"	Str.
R445	1	6'-8"	Str.
R446	2	35'-3"	Str.
S401	64	22'-3"	Str.
S402	43	10'-4"	2"
S403	43	7'-9"	2"
S501	36	42'-5"	Str.
S502 To S512	2 Each	4'-8" To 38'-6"	Str.
S513 To S542	1 Each	34'-8" To 46'-8"	Str.
S701 To S786	1 Each	34'-8" To 46'-8"	Str.

BAR BENDING DIAGRAMS

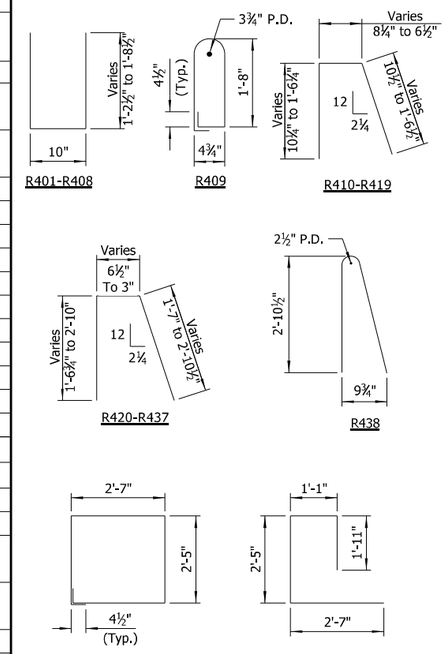

NOTES:
Dimensions of bars in bending diagram are out-to-out.

Number of bars shown is for one Type 2 Special Approach Slab.

NOTES:
All transverse reinforcing shall be placed on lines radial to CL Construction. Spacing is measured along CL Construction.

All longitudinal lines and longitudinal slab reinforcing shall be placed along curves concentric with CL Construction.

Top of approach slab shall be given a tine finish as specified for final finishing in Subsection 802.19 for Class 5 Tined Bridge Roadway Surface Finish.

For "SECTION W-W", "SECTION X-X", "SECTION Z-Z", "DETAILS OF LONGITUDINAL CONSTRUCTION JOINT" & "GENERAL NOTES", see Dwg. No. 65967.

For "SECTION Y-Y", see Dwg. No. 65963.

For details of Transitional Approach Railing, see Dwg. No. 65964.

QUANTITIES
(FOR INFORMATION ONLY)

TYPE	Class S(AE) Concrete	Reinforcing Steel (Gr. 60)
Type 2 Special	98.33 Cu. Yds.	12,302

STATE OF ARKANSAS
LICENSED PROFESSIONAL ENGINEER
No.14498
ADAM B. HALL

DIGITALLY SIGNED 6/30/2023
BRIDGE ENGINEER

SHEET 2 OF 7
DETAILS OF TYPE SPECIAL APPROACH SLABS

ROUTE SEC.

ARKANSAS STATE HIGHWAY COMMISSION
LITTLE ROCK, ARK.

DRAWN BY: CWT DATE: MAR. 2022 FILENAME: b061613_as2.dgn
CHECKED BY: DSB DATE: MAY 2022 SCALE: As Shown
DESIGNED BY: RAK DATE: MAR. 2022
BRIDGE NO. 07605 DRAWING NO. 65962

abhall 6/29/2023 1:37:44 PM
WORKSPACE:ARDOT Bridge (2019)
L:\2021\21T01028 - ARDOT 061613 I-40 Strs and Apprs\Drawings\b061613x2_S502_AS.dgn
REVISED DATE:

DATE REVISED	DATE FILMED	DATE REVISED	DATE FILMED	FED. ROAD DIST. NO.	STATE	FED. AID PROJ. NO.	SHEET NO.	TOTAL SHEETS
				6	ARK.			
				JOB NO.		061613	154	215
				(1) 07605	TYPE SPECIAL APP. SLAB			65963

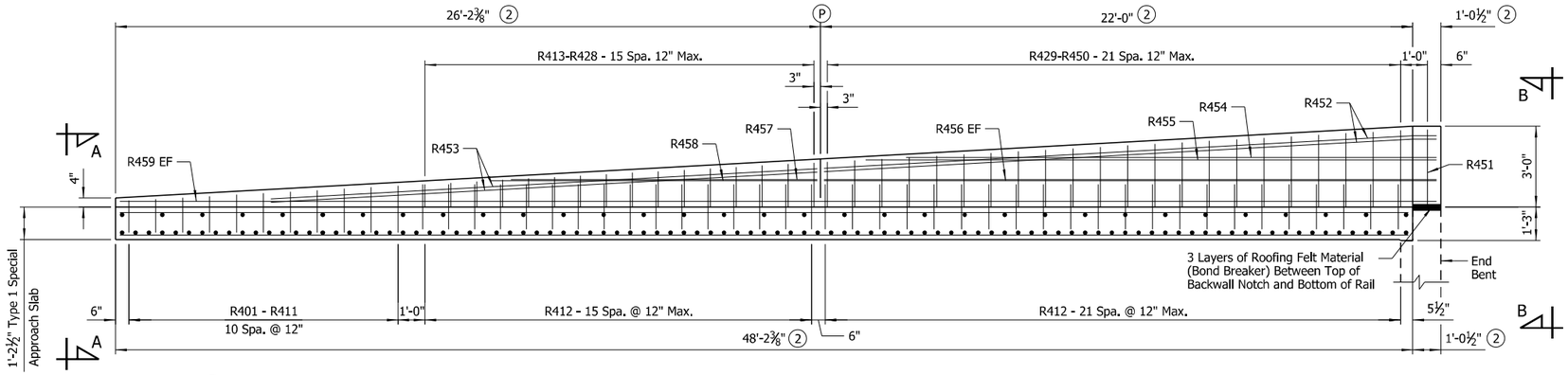

(P) Partial-depth transitional approach railing joint (1¼" to 1" max.). Stop 6" from top of approach slab.

ELEVATION OF TRANSITIONAL APPROACH RAILING

(Begin Bridge No. 07605)
(Looking at Outside Face of Rail)
Scale: ⅜" = 1'-0"

(1) Railing height varies as shown from 3'-0" to 4"

(2) Measured along Edge of Approach Slab

(3) See Special Approach Slab Plans for bar marks

NOTE:
For "BAR LIST - TYPE 1 SPECIAL APPROACH SLAB" and "BAR BENDING DIAGRAMS", see Dwg. No. 65961.

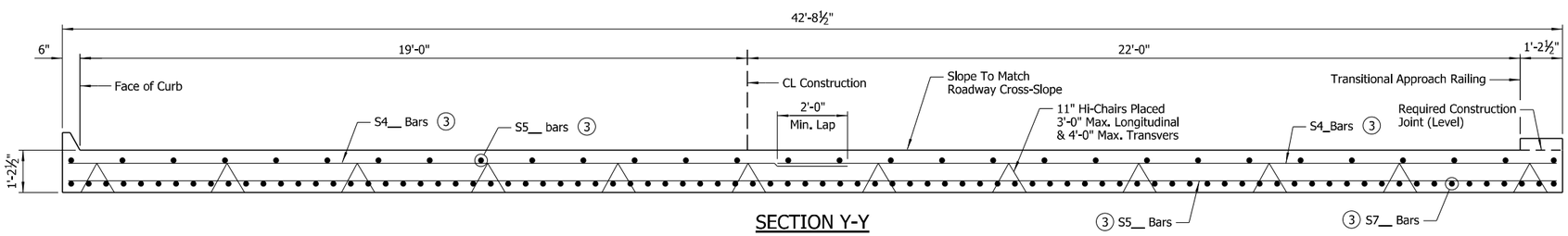

SECTION Y-Y

(Bridge No. 07605)
Scale: ½" = 1'-0"

LEGEND

EF = Each Face

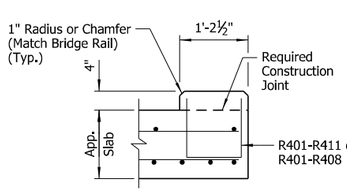

VIEW A-A

Scale: ¾" = 1'-0"

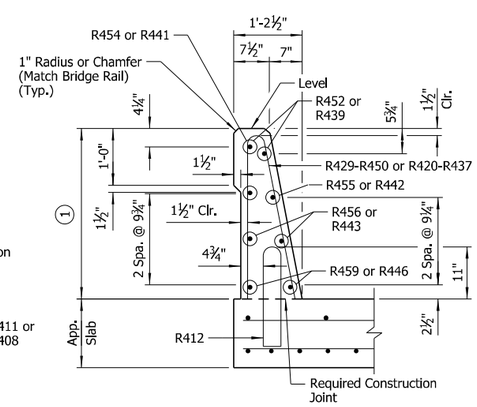

VIEW B-B

Scale: ¾" = 1'-0"

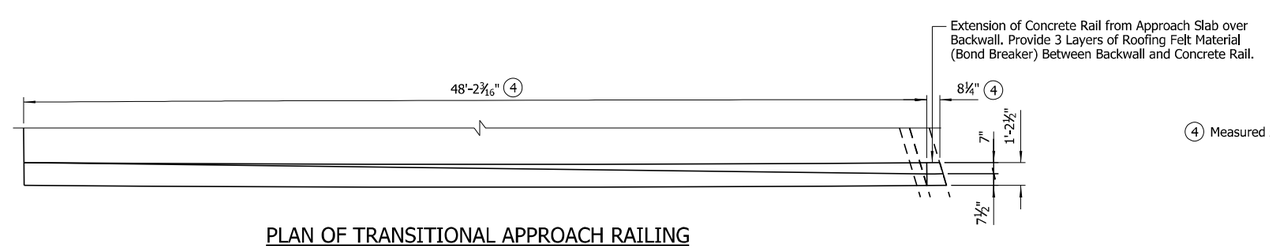

(4) Measured Along Inside Face of Rail

PLAN OF TRANSITIONAL APPROACH RAILING

(Begin Bridge No. 07605)
Scale: ¼" = 1'-0"

STATE OF ARKANSAS
LICENSED PROFESSIONAL ENGINEER
No.14498
ADAM B. HALL

DIGITALLY SIGNED 6/30/2023
BRIDGE ENGINEER

SHEET 3 OF 7
DETAILS OF TYPE SPECIAL APPROACH SLABS

ROUTE SEC.

ARKANSAS STATE HIGHWAY COMMISSION

LITTLE ROCK, ARK.

DRAWN BY:	CWT	DATE:	FEB. 2022	FILENAME:	b061613_as3.dgn
CHECKED BY:	DSB	DATE:	MAY 2022	SCALE:	As Shown
DESIGNED BY:	RAK	DATE:	FEB. 2022		

BRIDGE NO. 07605 DRAWING NO. 65963

abhall
WORKSPACE
L:\2021\21T01028 - ARDOT 061613 I-40 Strs and Apprs\Drawings\b061613x2_S503_AS.dgn
6/29/2023 1:37:45 PM
ARDOT Bridge (2019)
REVISED DATE:

DATE REVISED	DATE FILMED	DATE REVISED	DATE FILMED	FED. ROAD DIST. NO.	STATE	FED. AID PROJ. NO.	SHEET NO.	TOTAL SHEETS
				6	ARK.			
				JOB NO.		061613	155	215
				(1) 07605		TYPE SPECIAL APP. SLAB		65964

LEGEND

EF = Each Face

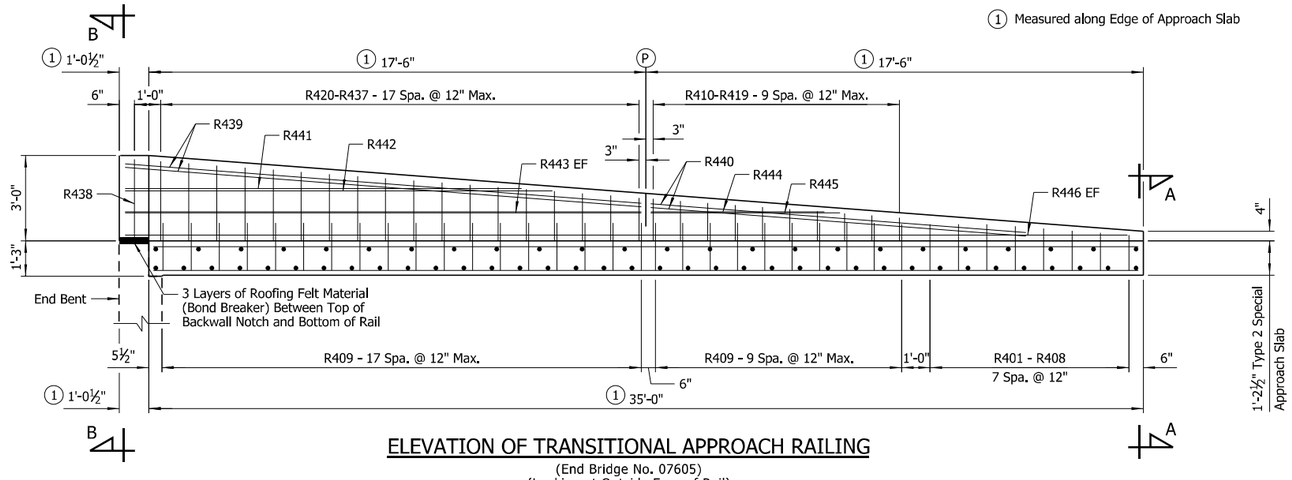

ELEVATION OF TRANSITIONAL APPROACH RAILING

(End Bridge No. 07605)
(Looking at Outside Face of Rail)
Scale: ⅜" = 1'-0"

NOTE:
For "VIEW A-A" & "VIEW B-B", see Dwg. No. 65963.

(P) Partial-depth transitional approach railing joint (1¼" to 1" max.). Stop 6" from top of approach slab.

NOTE:
For "BAR LIST - TYPE 2 SPECIAL APPROACH SLAB" and "BAR BENDING DIAGRAMS", see Dwg. No. 65962.

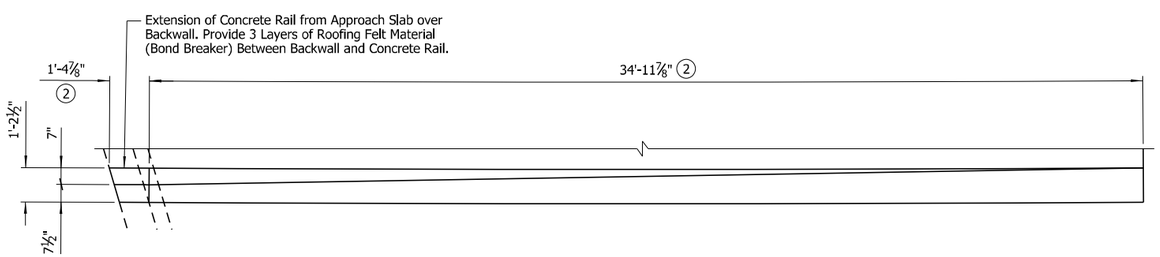

(2) Measured Along Inside Face of Rail

PLAN OF TRANSITIONAL APPROACH RAILING

(End Bridge No. 07605)
Scale: ¼" = 1'-0"

STATE OF ARKANSAS
LICENSED PROFESSIONAL ENGINEER
No.14498
ADAM B. HALL

DIGITALLY SIGNED 6/30/2023
BRIDGE ENGINEER

SHEET 4 OF 7
DETAILS OF TYPE SPECIAL APPROACH SLABS

ROUTE SEC.

ARKANSAS STATE HIGHWAY COMMISSION

LITTLE ROCK, ARK.

DRAWN BY:	CWT	DATE:	FEB. 2022	FILENAME:	b061613_as4.dgn
CHECKED BY:	DSB	DATE:	MAY 2022	SCALE:	As Shown
DESIGNED BY:	RAK	DATE:	FEB. 2022		

BRIDGE NO. 07605 DRAWING NO. 65964

abhall 6/29/2023 1:37:46 PM
WORKSPACE ARDOT Bridge (2019)
L:\2021\21T01028 - ARDOT 061613 I-40 Strs and Apprs\Drawings\b061613x2_S504_AS.dgn
REVISED DATE:

DATE REVISED	DATE FILMED	DATE REVISED	DATE FILMED	FED. ROAD DIST. NO.	STATE	FED. AID PROJ. NO.	SHEET NO.	TOTAL SHEETS
				6	ARK.			
				JOB NO.		061613	156	215
				(1) 07606	TYPE SPECIAL APP. SLAB			65965

(2) S502-S506 - 4 Spa. @ 12" (Top & Bottom)

(3) Measured Along Edge of Approach Slab

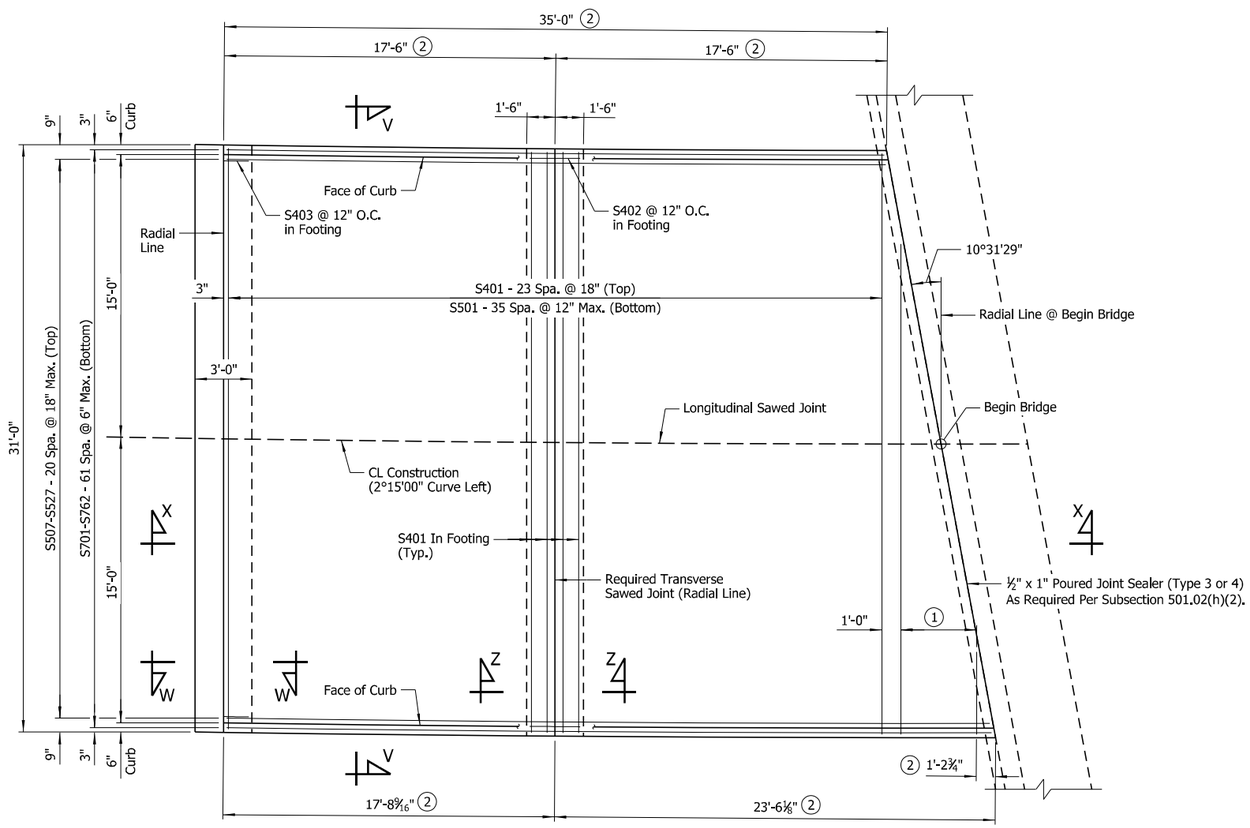

PLAN - TYPE 3 SPECIAL APPROACH SLAB

(Begin Bridge No. 07606)
Scale: ¼" = 1'-0"

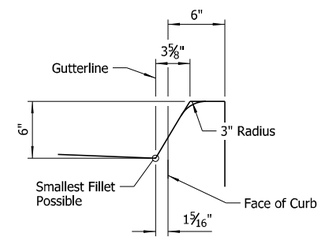

TYPICAL CURB DETAIL

Scale: 1½" = 1'-0"

QUANTITIES

(FOR INFORMATION ONLY)

TYPE	Class S(AE) Concrete	Reinforcing Steel (Gr. 60)
Type 3 Special	66.03 Cu. Yds.	7,989 Lbs.

BAR LIST - TYPE 3 SPECIAL APPROACH SLAB

Mark	No. Req'd.	Length	Pin. Dia.
S401	32	30'-8"	Str.
S402	31	10'-4"	2"
S403	31	7'-9"	2"
S501	36	30'-8"	Str.
S502 To S506	2 Each	5'-6" To 27'-0"	Str.
S507 To S527	1 Each	34'-9" To 40'-8"	Str.
S701 To S762	1 Each	34'-8" To 40'-9"	Str.

BAR BENDING DIAGRAMS

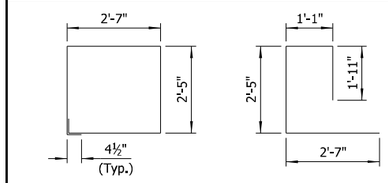

NOTES:
Dimensions of bars in bending diagram are out-to-out.

Number of bars shown is for one Type 3 Special Approach Slab.

NOTES:
All transverse reinforcing shall be placed on lines radial to CL Construction. Spacing is measured along CL Construction.

All longitudinal lines and longitudinal slab reinforcing shall be placed along curves concentric with CL Construction.

Top of approach slab shall be given a tine finish as specified for final finishing in Subsection 802.19 for Class 5 Tined Bridge Roadway Surface Finish.

For "SECTION W-W", "SECTION X-X", "SECTION V-V", "SECTION Z-Z", "DETAILS OF LONGITUDINAL CONSTRUCTION JOINT" & "GENERAL NOTES", see Dwg. No. 65967.

STATE OF ARKANSAS
LICENSED PROFESSIONAL ENGINEER
No.14498
ADAM B. HALL

DIGITALLY SIGNED 6/30/2023
BRIDGE ENGINEER

SHEET 5 OF 7
DETAILS OF TYPE SPECIAL APPROACH SLABS

ROUTE SEC.

ARKANSAS STATE HIGHWAY COMMISSION
LITTLE ROCK, ARK.

DRAWN BY: CWT DATE: FEB. 2022 FILENAME: b061613_as5.dgn
CHECKED BY: DSB DATE: MAY 2022 SCALE: As Shown
DESIGNED BY: RAK DATE: FEB. 2022
BRIDGE NO. 07606 DRAWING NO. 65965

abhall 6/29/2023 1:37:47 PM
WORKSPACE:ARDOT Bridge (2019)
L:\2021\21T01028 - ARDOT 061613 I-40 Strs and Apprs\Drawings\b061613x2_S505_AS.dgn
REVISED DATE:

DATE REVISED	DATE FILMED	DATE REVISED	DATE FILMED	FED. ROAD DIST. NO.	STATE	FED. AID PROJ. NO.	SHEET NO.	TOTAL SHEETS
				6	ARK.			
				JOB NO.		061613	157	215
				07606	TYPE SPECIAL APP. SLAB			65966

(1) S502-S506 - 4 Spa. @ 12" (Top & Bottom)

(2) Measured Along Edge of Approach Slab

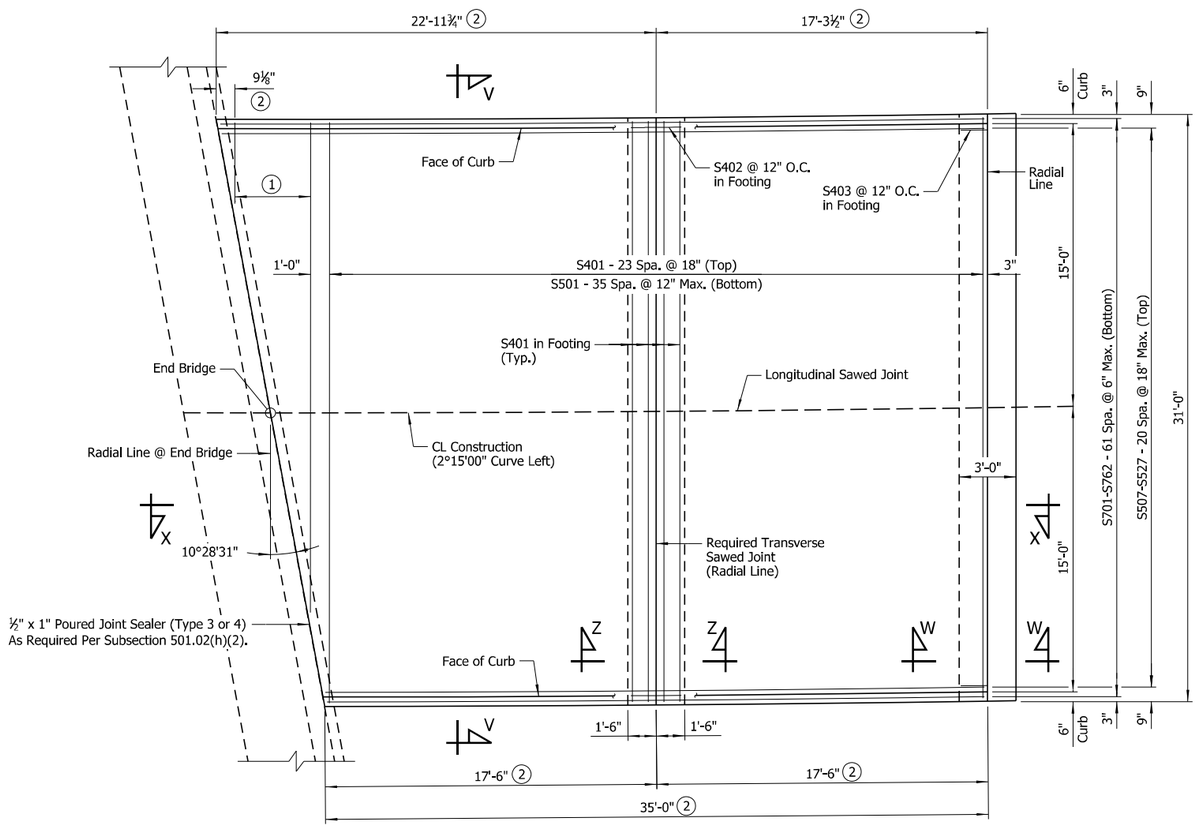

PLAN - TYPE 4 SPECIAL APPROACH SLAB

(End Bridge No. 07606)
Scale: ¼" = 1'-0"

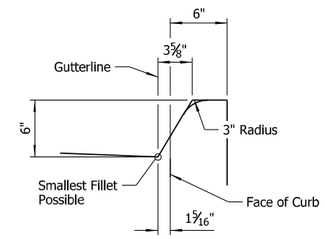

TYPICAL CURB DETAIL

Scale: 1½" = 1'-0"

QUANTITIES

(FOR INFORMATION ONLY)

TYPE	Class S(AE) Concrete	Reinforcing Steel (Gr. 60)
Type 4 Special	65.37 Cu. Yds.	7,890 Lbs.

BAR LIST - TYPE 4 SPECIAL APPROACH SLAB

Mark	No. Req'd.	Length	Pin. Dia.
S401	32	30'-8"	Str.
S402	31	10'-4"	2"
S403	31	7'-9"	2"
S501	36	30'-8"	Str.
S502 To S506	2 Each	3'-0" To 24'-5"	Str.
S507 To S527	1 Each	34'-9" To 39'-9"	Str.
S701 To S762	1 Each	34'-8" To 39'-10"	Str.

BAR BENDING DIAGRAMS

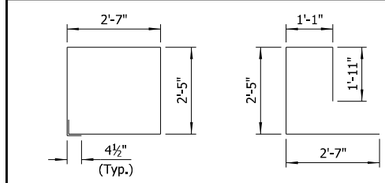

NOTES:
Dimensions of bars in bending diagram are out-to-out.

Number of bars shown is for one Type 4 Special Approach Slab.

NOTES:
All transverse reinforcing shall be placed on lines radial to CL Construction. Spacing is measured along CL Construction.

All longitudinal lines and longitudinal slab reinforcing shall be placed along curves concentric with CL Construction.

Top of approach slab shall be given a tine finish as specified for final finishing in Subsection 802.19 for Class 5 Tined Bridge Roadway Surface Finish.

For "SECTION W-W", "SECTION X-X", "SECTION V-V", "SECTION Z-Z", "DETAILS OF LONGITUDINAL CONSTRUCTION JOINT" & "GENERAL NOTES", see Dwg. No. 65967.

STATE OF ARKANSAS
LICENSED PROFESSIONAL ENGINEER
No.14498
ADAM B. HALL

DIGITALLY SIGNED 6/30/2023
BRIDGE ENGINEER

SHEET 6 OF 7
DETAILS OF TYPE SPECIAL APPROACH SLABS

ROUTE SEC.

ARKANSAS STATE HIGHWAY COMMISSION

LITTLE ROCK, ARK.

DRAWN BY: CWT DATE: FEB. 2022 FILENAME: b061613_as6.dgn
CHECKED BY: DSB DATE: MAY 2022 SCALE: As Shown
DESIGNED BY: RAK DATE: FEB. 2022
BRIDGE NO. 07606 DRAWING NO. 65966

abhall 6/29/2023 1:37:48 PM
WORKSPACE: ARDOT Bridge (2019)
L:\2021\21T01028 - ARDOT 061613 I-40 Strs and Apprs\Drawings\b061613x2_S506_AS.dgn
REVISED DATE:

DATE REVISED	DATE FILMED	DATE REVISED	DATE FILMED	FED. ROAD DIST. NO.	STATE	FED. AID PROJ. NO.	SHEET NO.	TOTAL SHEETS
				6	ARK.			
				JOB NO.		061613	158	215
				(1) 07605, 07606	TYPE SPECIAL APP. SLAB			65967

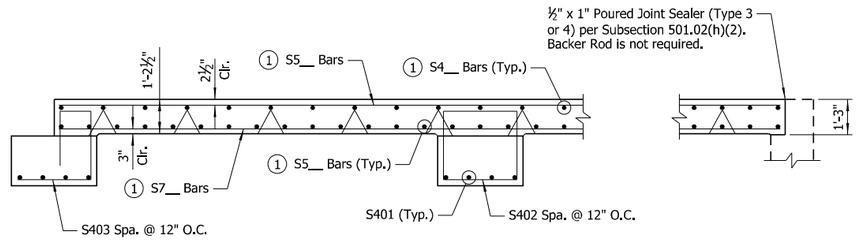

SECTION X-X

Scale: ⅜" = 1'-0"

(1) See Special Approach Slab Plans for bar marks.

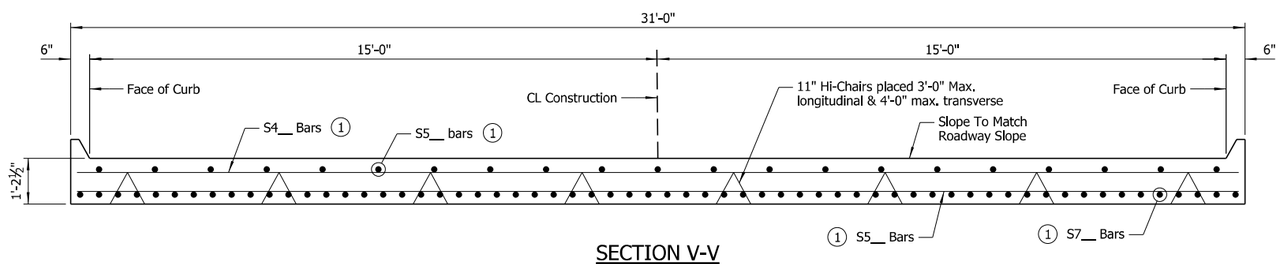

SECTION V-V

(Bridge No. 07606)
Scale: ½" = 1'-0"

GENERAL NOTES

All concrete shall be Class S(AE) with a minimum 28 day compressive strength f'c = 4,000 psi and shall be poured in the dry. All exposed corners to be chamfered 1" unless otherwise noted.

All reinforcing steel shall be Grade 60 conforming to AASHTO M 31 or M 322, Type A, with mill test reports.

Approach Slabs, including Transitional Approach Railing, will be measured and paid for in accordance with Section 504.

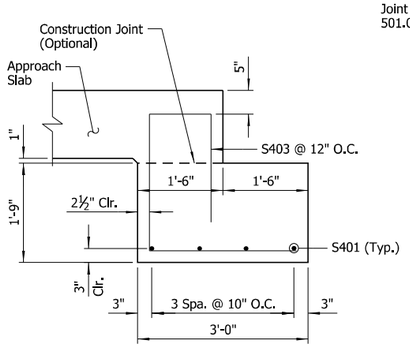

SECTION W-W

Scale: ¾" = 1'-0"

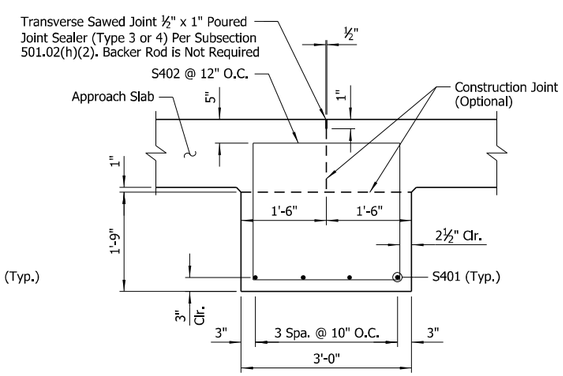

SECTION Z-Z

Scale: ¾" = 1'-0"

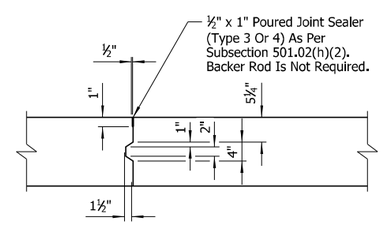

DETAILS OF LONGITUDINAL CONSTRUCTION JOINT

No Scale

STATE OF ARKANSAS
LICENSED PROFESSIONAL ENGINEER
No.14498
ADAM B. HALL

DIGITALLY SIGNED 6/30/2023
BRIDGE ENGINEER

SHEET 7 OF 7
DETAILS OF TYPE SPECIAL APPROACH SLABS

ROUTE SEC.

ARKANSAS STATE HIGHWAY COMMISSION

LITTLE ROCK, ARK.

DRAWN BY: CWT DATE: FEB. 2022 FILENAME: b061613_as7.dgn
CHECKED BY: DSB DATE: MAY 2022 SCALE: As Shown
DESIGNED BY: RAK DATE: FEB. 2022
BRIDGE NO. 07605, 07606 DRAWING NO. 65967

abhall 6/29/2023 1:37:49 PM
WORKSPACE\ARDOT Bridge (2019)
L:\2021\21T01028 - ARDOT 061613 I-40 Strs and Apprs\Drawings\b061613x2_S507_AS.dgn
REVISED DATE:

DATE REVISED	DATE FILMED	DATE REVISED	DATE FILMED	FED. ROAD DIST. NO.	STATE	FED. AID PROJ. NO.	SHEET NO.	TOTAL SHEETS
				6	ARK.			
				JOB NO.		061613	159	215
				(I) 07605		RETAINING WALLS		65968

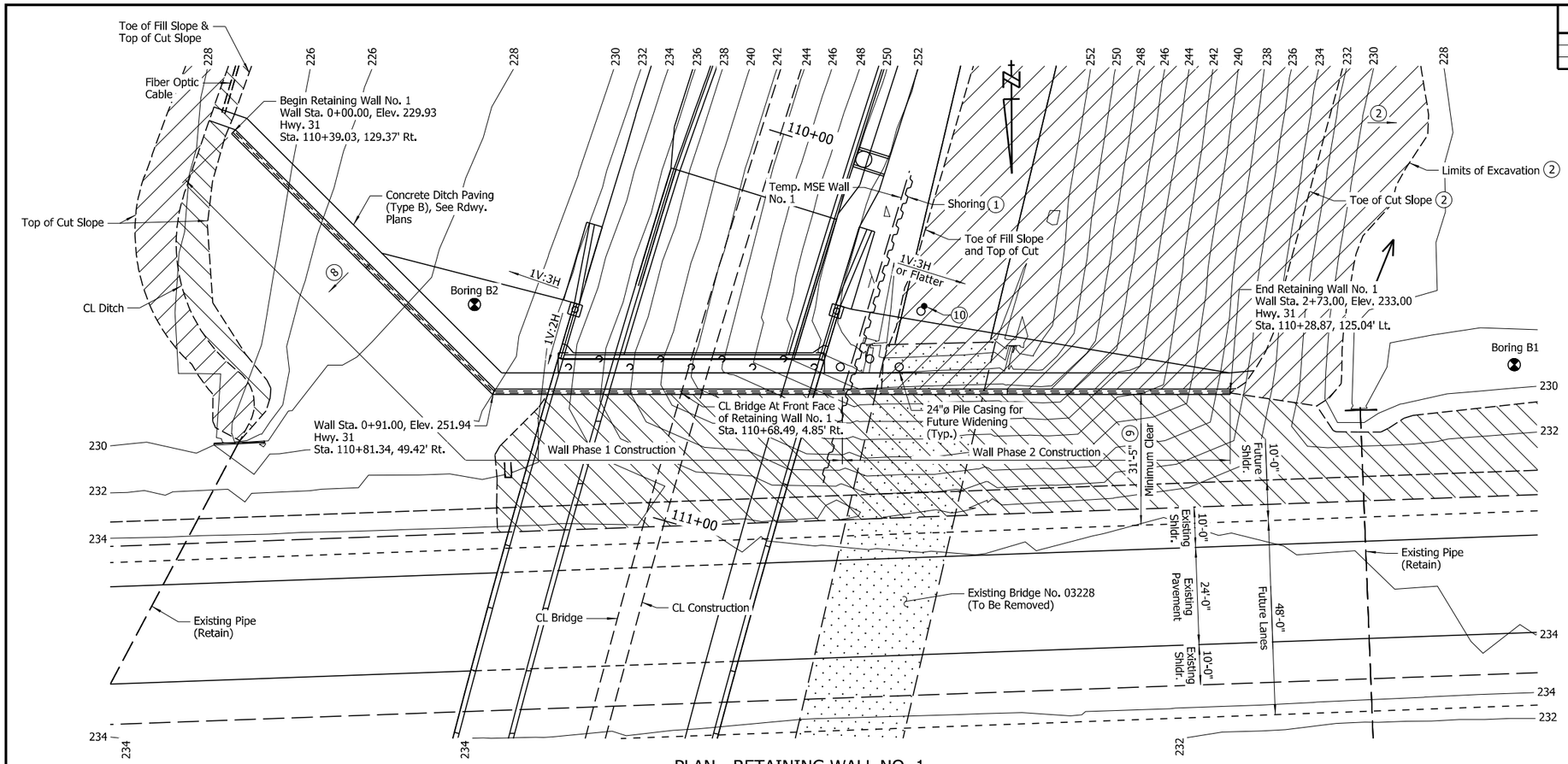

PLAN - RETAINING WALL NO. 1

Scale: 1/16" = 1'-0"

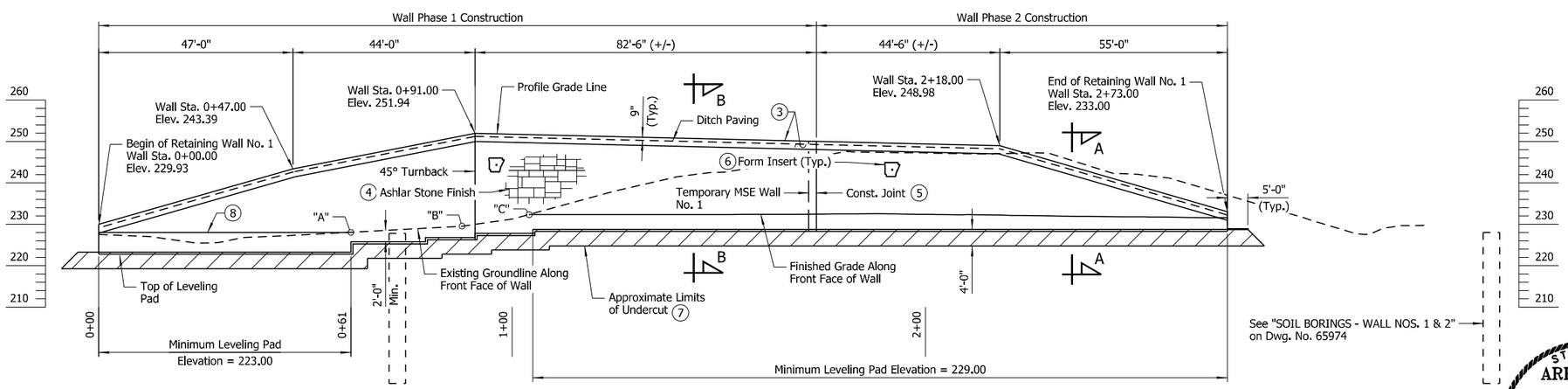

ELEVATION - RETAINING WALL NO. 1

(Looking at Front Face of Wall)
Scale: 1/16" = 1'-0"

NOTES:
For "SECTION A-A" and "SECTION B-B", see Dwg. No. 65972.

For "GENERAL NOTES" and "TABLE OF QUANTITIES", see Dwg. No. 65973.

For "N-VALUES" and "BORING LEGEND", see Dwg. No. 65974.

Offset dimensions for Retaining Wall No. 1 are measured from CL Construction to Front Face of Wall panel.

Wall stationing shown is taken along Front Face of Wall panel.

Wall Elevations shown are measured along Profile Grade Line at top of coping.

RETAINING WALL NO. 1 ELEVATIONS

POINT	WALL STATION	EXISTING GROUNDLINE
"A"	0+61.00	228.03
"B"	0+87.89	229.51
"C"	1+04.11	232.32

RETAINING WALL NO. 1 DESIGN PARAMETERS

Wall No.	Factored Bearing Resistance (KSF)	Minimum Strap Length (FT)
Wall No. 1	6.8	0.7 H

NOTE:
"H" shall be measured from the top of leveling pad elevation to the finished surface.

1. See SP "SHORING"
2. See Roadway Plans for more information regarding removal of existing embankment
3. Class 3 Textured Coating Finish (Color = Brown, Color Chip No. 33522)
4. "Ashlar Stone" Pattern & Class 3 Textured Coating Finish (Color = Brown, Color Chip = No. 30219)
5. Location of Construction Joint shall coordinate with final location of shoring
6. Class 3 Textured Coating Finish (Color = Brown, Color Chip No. 33522)
7. Backfill with Aggregate Base Course (Class 7)
8. Finish Grade Along Wall = 228.00 +/-, grade to drain toward relocated ditch
9. Measured to front face of coping
10. Proposed retaining wall configuration accommodates future 5-Lane facility on Highway 31. Control Point for grading:

Station: 110+30.50
Offset: 46.50 Lt.
Elevation: 257.00

STATE OF ARKANSAS
LICENSED PROFESSIONAL ENGINEER
No.21243
COLTON S. WYLIE

DIGITALLY SIGNED 6/30/2023
BRIDGE ENGINEER

SHEET 1 OF 9
DETAILS OF RETAINING WALLS

ROUTE SEC.

ARKANSAS STATE HIGHWAY COMMISSION

LITTLE ROCK, ARK.

DRAWN BY: CSW DATE: FEB. 2022 FILENAME: b061613_r1.dgn
CHECKED BY: JHR DATE: JAN. 2023 SCALE: As Shown
DESIGNED BY: CSW DATE: FEB. 2022
BRIDGE NO. 07605 DRAWING NO. 65968

abhall
WORKSPACE
6/29/2023 1:37:56 PM
ARDOT Bridge (2019)
L:\2021\21T01028 - ARDOT 061613 I-40 Strs and Apprs\Drawings\b061613_S601_WALL.dgn
REVISED DATE:

DATE REVISED	DATE FILMED	DATE REVISED	DATE FILMED	FED. ROAD DIST. NO.	STATE	FED. AID PROJ. NO.	SHEET NO.	TOTAL SHEETS
				6	ARK.			
				JOB NO.		061613	160	215
				(1) 07605		RETAINING WALLS		65969

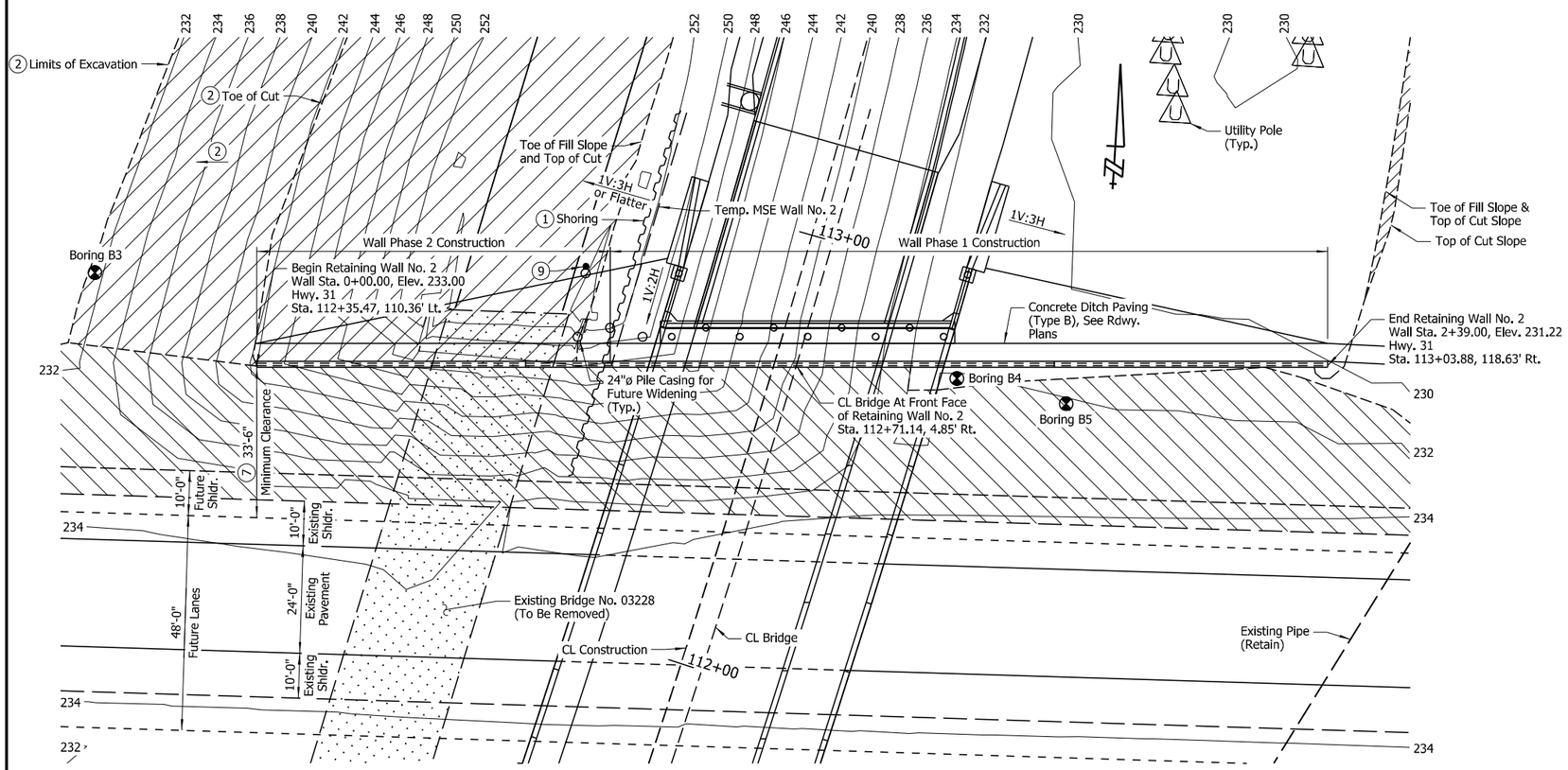

PLAN - RETAINING WALL NO. 2

Scale: 1/16" = 1'-0"

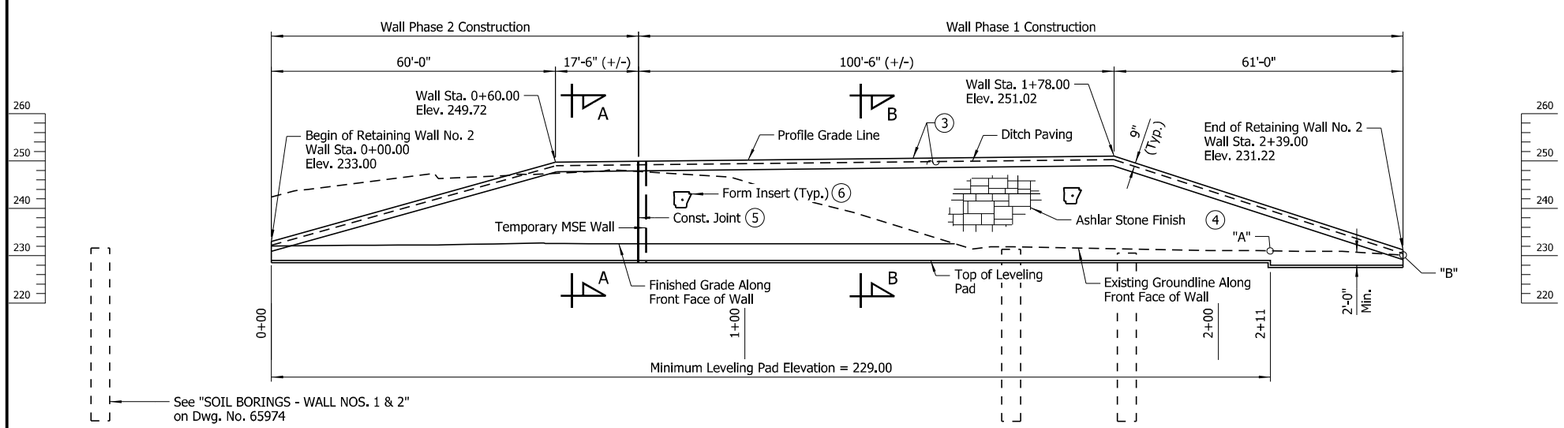

ELEVATION - RETAINING WALL NO. 2

(Looking at Front Face of Wall)
Scale: 1/16" = 1'-0"

NOTES:
For "SECTION A-A" and "SECTION B-B", see Dwg. No. 65972.

For "GENERAL NOTES" and "TABLE OF QUANTITIES", Dwg. No. 65973.

For "N-VALUES" and "BORING LEGEND", see Dwg. No. 65974.

Offset dimensions for Retaining Wall No. 2 are measured from CL Construction to Front Face of Wall panel.

Wall stationing shown is taken along Front Face of Wall panel.

Wall Elevations shown are measured along Profile Grade Line at top of coping.

RETAINING WALL NO. 2 ELEVATIONS		
POINT	WALL STATION	EXISTING GROUNDLINE
"A"	2+11.00	231.01
"B"	2+39.00	230.13

(8) RETAINING WALL NO. 2 DESIGN PARAMETERS

Wall No.	Factored Bearing Resistance (KSF)	Minimum Strap Length (FT)
Wall No. 2	5.2	0.8 H

NOTE:
"H" shall be measured from the top of leveling pad elevation to the finished surface.

(1) See SP "SHORING"

(2) See Roadway Plans for more information regarding removal of existing embankment

(3) Class 3 Textured Coating Finish (Color = Brown, Color Chip No. 33522)

(4) "Ashlar Stone" Pattern & Class 3 Textured Coating Finish (Color = Brown, Color Chip = No. 30219)

(5) Location of Construction Joint shall coordinate with final location of shoring

(6) Class 3 Textured Coating Finish (Color = Brown, Color Chip No. 33522)

(7) Measured to front face of coping

(8) Wall design parameters are based on founding the walls on stable native soils. Subgrade soils may be locally unstable and compressible, requiring undercut. When directed by the Engineer, the localized, soft material shall be excavated and backfilled with Class 7. Any excavation shall be paid for as "UNCLASSIFIED EXCAVATION" and any backfill shall be paid for as "AGGREGATE BASE COURSE (Class 7)".

(9) Proposed retaining wall configuration accommodates future 5-Lane facility on Highway 31. Control point for grading:

Station: 112+79.00
Offset: 46.50 Lt.
Elevation: 257.00

STATE OF ARKANSAS
LICENSED PROFESSIONAL ENGINEER
No.21243
COLTON S. WYLIE

DIGITALLY SIGNED 6/30/2023
BRIDGE ENGINEER

SHEET 2 OF 9
DETAILS OF RETAINING WALLS

ROUTE SEC.

ARKANSAS STATE HIGHWAY COMMISSION

LITTLE ROCK, ARK.

DRAWN BY:	CSW	DATE:	FEB. 2022	FILENAME:	b061613_r2.dgn
CHECKED BY:	JHR	DATE:	JAN. 2023	SCALE:	As Shown
DESIGNED BY:	CSW	DATE:	FEB. 2022		

BRIDGE NO. 07605 DRAWING NO. 65969

6/29/2023 1:37:57 PM
abhall
WORKSPACE\ARDOT Bridge (2019)
L:\2021\21T01028 - ARDOT 061613 I-40 Strs and Apprs\Drawings\b061613_S602_WALL.dgn
REVISED DATE:

DATE REVISED	DATE FILMED	DATE REVISED	DATE FILMED	FED. ROAD DIST. NO.	STATE	FED. AID PROJ. NO.	SHEET NO.	TOTAL SHEETS
				6	ARK.			
				JOB NO.		061613	161	215
				(1) 07606		RETAINING WALLS		65970

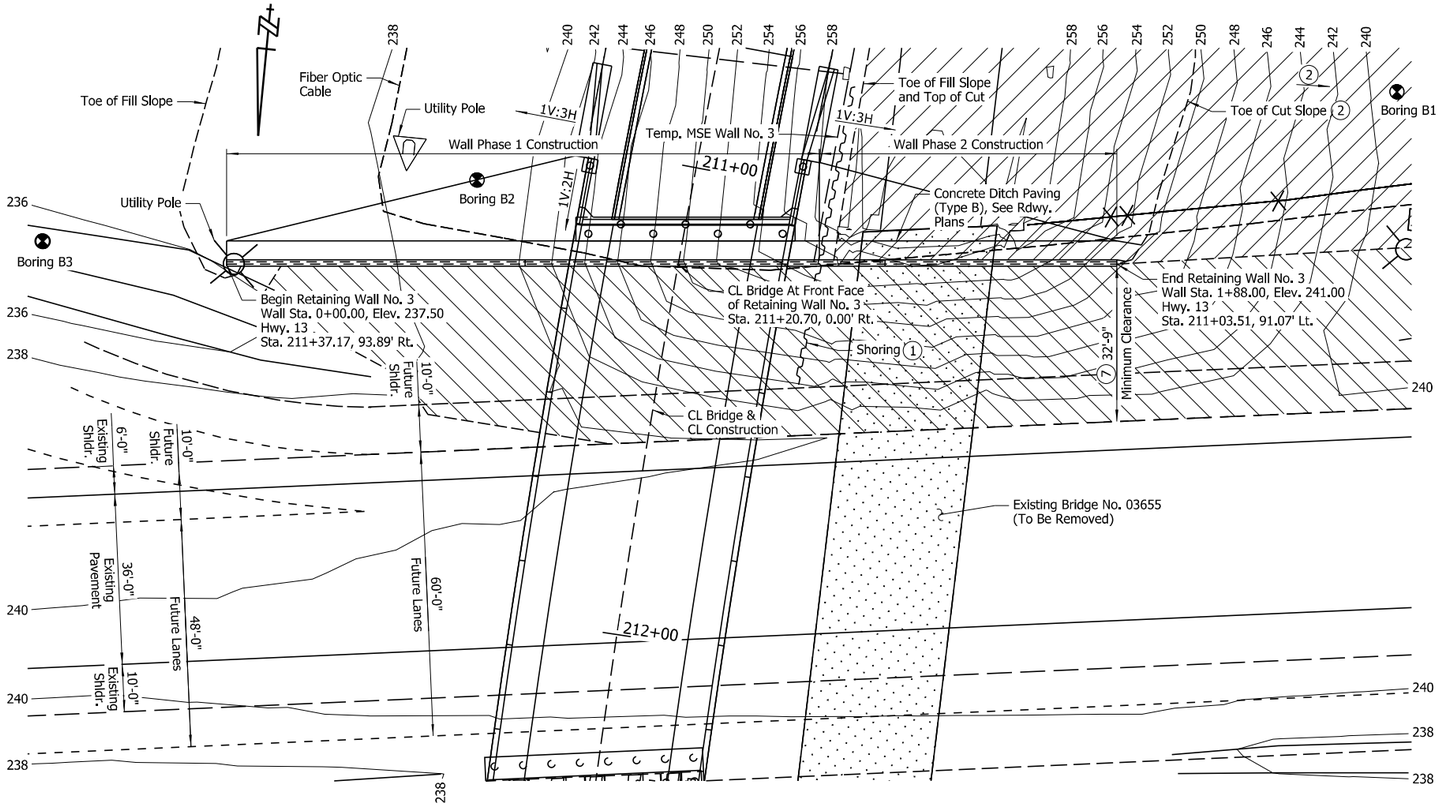

PLAN - RETAINING WALL NO. 3

Scale: 1/16" = 1'-0"

NOTES:
For "SECTION A-A" and "SECTION B-B", see Dwg. No. 65972.

For "GENERAL NOTES" and "TABLE OF QUANTITIES", see Dwg. No. 65973.

For "N-VALUES" and "BORING LEGEND", see Dwg. No. 65974.

Offset dimensions for Retaining Wall No. 3 are measured from CL Construction to Front Face of Wall panel.

Wall stationing shown is taken along Front Face of Wall panel.

Wall Elevations shown are measured along Profile Grade Line at top of coping.

(8) RETAINING WALL NO. 3 DESIGN PARAMETERS

Wall No.	Factored Bearing Resistance (KSF)	Minimum Strap Length (FT)
Wall No. 3	5.2	0.8 H

NOTE:
"H" shall be measured from the top of leveling pad elevation to the finished surface.

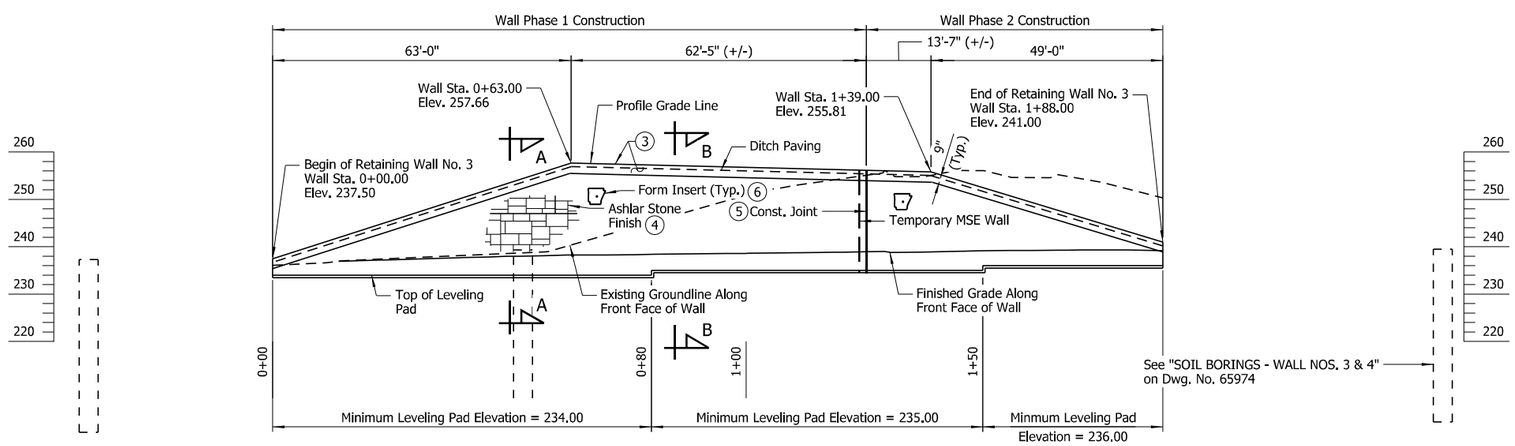

ELEVATION - RETAINING WALL NO. 3

(Looking at Front Face of Wall)
Scale: 1/16" = 1'-0"

(1) See SP "SHORING"

(2) See Roadway Plans for more information regarding removal of existing embankment

(3) Class 3 Textured Coating Finish (Color = Brown, Color Chip No. 33522)

(4) "Ashlar Stone" Pattern & Class 3 Textured Coating Finish (Color = Brown, Color Chip = No. 30219)

(5) Location of Construction Joint shall coordinate with final location of shoring

(6) Class 3 Textured Coating Finish (Color = Brown, Color Chip No. 33522)

(7) Measured to front face of coping

(8) Wall design parameters are based on founding the walls on stable native soils. Subgrade soils may be locally unstable and compressible, requiring undercut. When directed by the Engineer, the localized, soft material shall be excavated and backfilled with Class 7. Any excavation shall be paid for as "UNCLASSIFIED EXCAVATION" and any backfill shall be paid for as "AGGREGATE BASE COURSE (CLASS 7)".

STATE OF ARKANSAS
LICENSED PROFESSIONAL ENGINEER
No.21243
COLTON S. WYLIE

DIGITALLY SIGNED 6/30/2023
BRIDGE ENGINEER

SHEET 3 OF 9
DETAILS OF RETAINING WALLS

ROUTE SEC.

ARKANSAS STATE HIGHWAY COMMISSION

LITTLE ROCK, ARK.

DRAWN BY:	CSW	DATE:	FEB. 2022	FILENAME:	b061613_r3.dgn
CHECKED BY:	JHR	DATE:	JAN. 2023	SCALE:	As Shown
DESIGNED BY:	CSW	DATE:	FEB. 2022		

BRIDGE NO. 07606 DRAWING NO. 65970

abhall 6/29/2023 1:37:58 PM
WORKSPACE\ARDOT Bridge (2019)
L:\2021\21T01028 - ARDOT 061613 I-40 Strs and Apprs\Drawings\b061613_S603_WALL.dgn
REVISED DATE:

DATE REVISED	DATE FILMED	DATE REVISED	DATE FILMED	FED. ROAD DIST. NO.	STATE	FED. AID PROJ. NO.	SHEET NO.	TOTAL SHEETS
				6	ARK.			
				JOB NO.		061613	162	215
				(1) 07606		RETAINING WALLS		65971

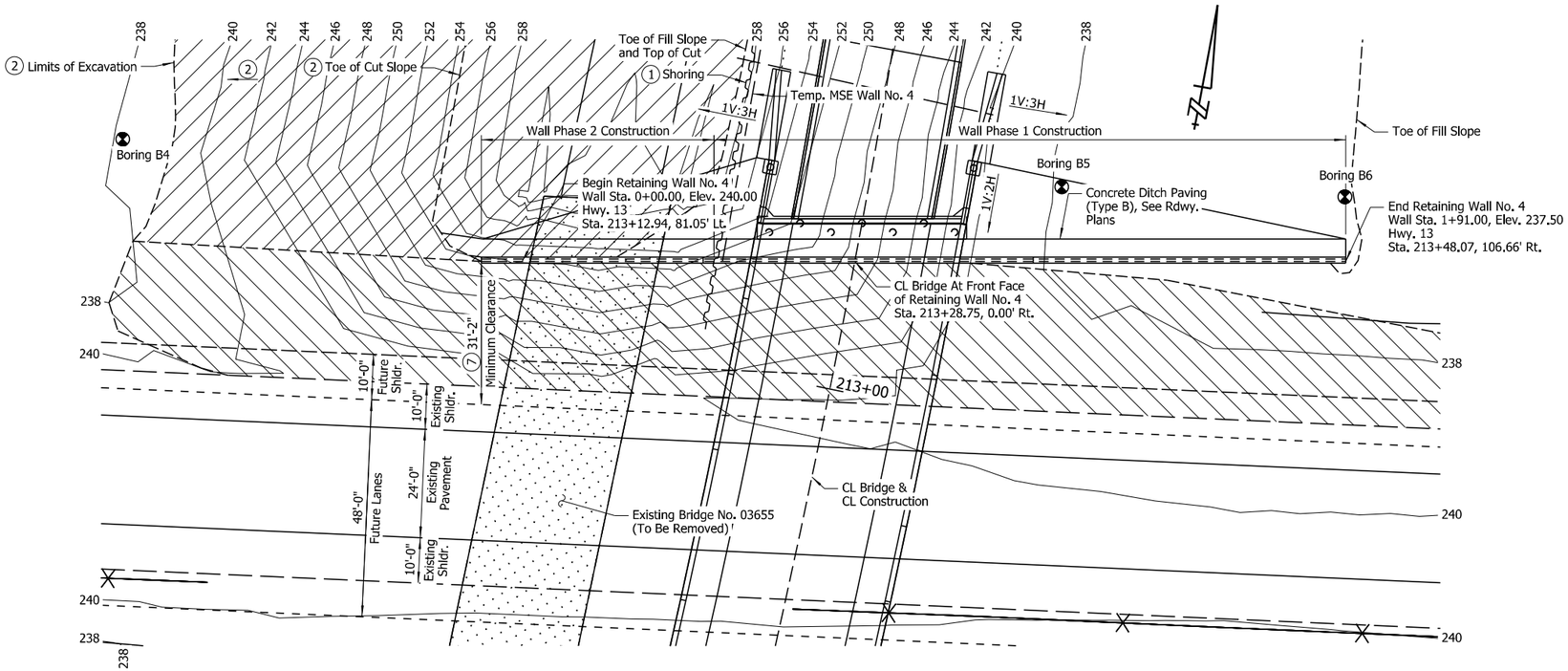

PLAN - RETAINING WALL NO. 4

Scale: 1/16" = 1'-0"

NOTES:
For "SECTION A-A" and "SECTION B-B", see Dwg. No. 65972.

For "GENERAL NOTES" and "TABLE OF QUANTITIES", see Dwg. No. 65973.

For "N-VALUES" and "BORING LEGEND", see Dwg. No. 65974.

Offset dimensions for Retaining Wall No. 4 are measured from CL Construction to Front Face of Wall panel.

Wall stationing shown is taken along Front Face of Wall panel.

Wall Elevations shown are measured along Profile Grade Line at top of coping.

RETAINING WALL NO. 4 ELEVATIONS

POINT	WALL STATION	EXISTING GROUNDLINE
"A"	1+50.00	236.91
"B"	1+91.00	236.39

(8) RETAINING WALL NO. 4 DESIGN PARAMETERS

Wall No.	Factored Bearing Resistance (KSF)	Minimum Strap Length (FT)
Wall No. 4	5.2	0.8 H

NOTE:
"H" shall be measured from the top of leveling pad elevation to the finished surface.

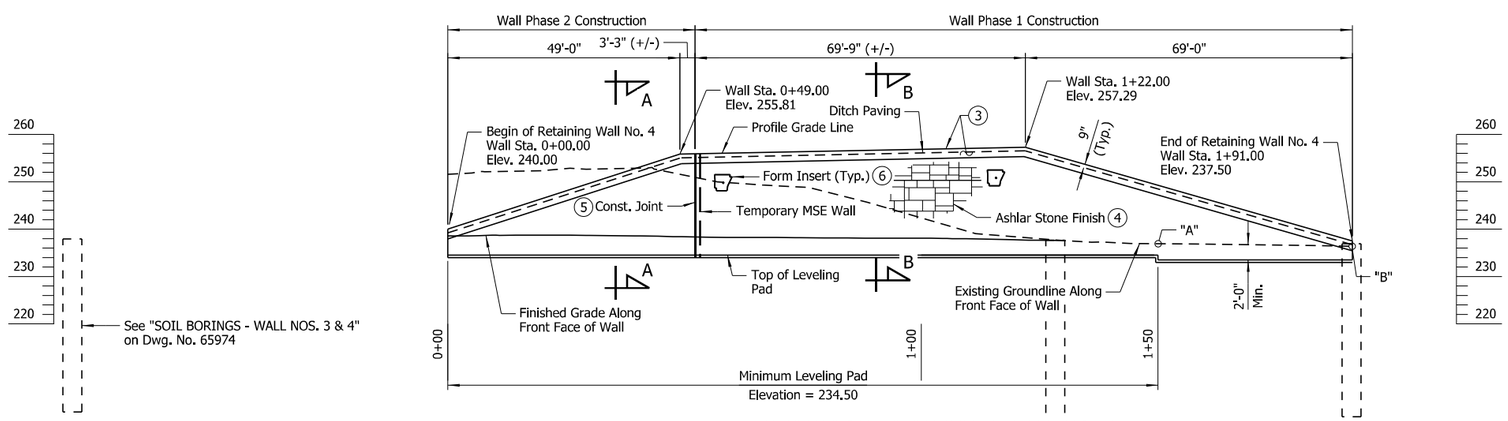

ELEVATION - RETAINING WALL NO. 4

(Looking at Front Face of Wall)
Scale: 1/16" = 1'-0"

(1) See SP "SHORING"

(2) See Roadway Plans for more information regarding removal of existing embankment

(3) Class 3 Textured Coating Finish (Color = Brown, Color Chip No. 33522)

(4) "Ashlar Stone" Pattern & Class 3 Textured Coating Finish (Color = Brown, Color Chip = No. 30219)

(5) Location of Construction Joint shall coordinate with final location of shoring

(6) Class 3 Textured Coating Finish (Color = Brown, Color Chip No. 33522)

(7) Measured to front face of coping

(8) Wall design parameters are based on founding the walls on stable native soils. Subgrade soils may be locally unstable and compressible, requiring undercut. When directed by the Engineer, the localized, soft material shall be excavated and backfilled with Class 7. Any excavation shall be paid for as "UNCLASSIFIED EXCAVATION" and any backfill shall be paid for as "AGGREGATE BASE COURSE (Class 7)".

STATE OF ARKANSAS
LICENSED PROFESSIONAL ENGINEER
No.21243
COLTON S. WYLIE

DIGITALLY SIGNED 6/30/2023
BRIDGE ENGINEER

SHEET 4 OF 9
DETAILS OF RETAINING WALLS

ROUTE SEC.

ARKANSAS STATE HIGHWAY COMMISSION

LITTLE ROCK, ARK.

DRAWN BY: CSW DATE: FEB. 2022 FILENAME: b061613_r4.dgn
CHECKED BY: JHR DATE: JAN. 2023 SCALE: As Shown
DESIGNED BY: CSW DATE: FEB. 2022

BRIDGE NO. 07606 DRAWING NO. 65971

abhall 6/29/2023 1:37:59 PM
WORKSPACE:ARDOT Bridge (2019)
L:\2021\21T01028 - ARDOT 061613 I-40 Strs and Apprs\Drawings\b061613_S604_WALL.dgn
REVISED DATE:

DATE REVISED	DATE FILMED	DATE REVISED	DATE FILMED	FED. ROAD DIST. NO.	STATE	FED. AID PROJ. NO.	SHEET NO.	TOTAL SHEETS
				6	ARK.			
				JOB NO.		061613	163	215
				(I) 07605, 07606		RETAINING WALLS		65972

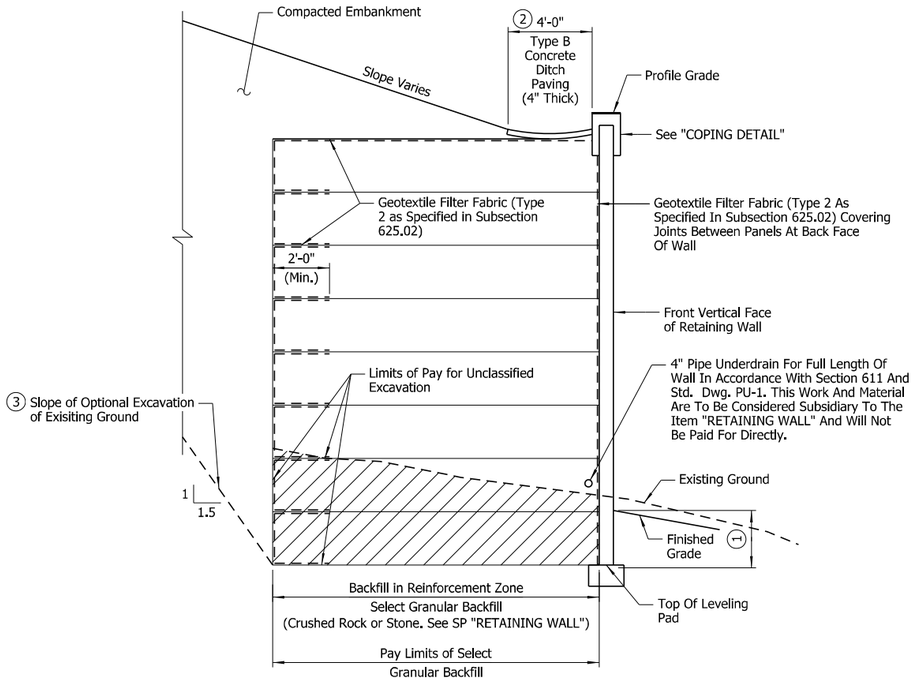

BACKFILL METHOD B

No Scale

NOTE: Method B is required for all Walls.

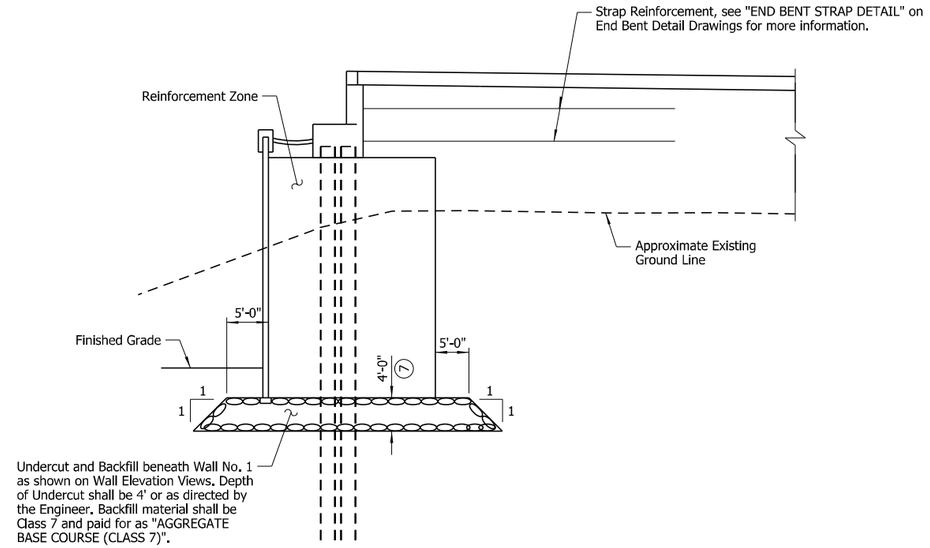

TYPICAL UNDERCUT DETAIL - WALL NO. 1

No Scale

(1) See WALL ELEVATION VIEWS for embedment requirements

(2) The 4'-0" concrete ditch paving shall be constructed without the 3" weep holes. See Standard Drawing CDP-1 for ditch paving details.

(3) The Contractor has the option of using a cut slope or shoring to maintain stability of the cut or existing wall. Any excavation beyond the limits of the reinforcement zone or any shoring used will not be paid for directly, but shall be considered to the item "RETAINING WALL". See SP "RETAINING WALL" for additional information.

(4) ½" Preformed Joint filler (AASHTO M153 Type 1) per subsection 501.02(h)(1) with ½" x 1" Type 3 or 4 joint sealer per Subsection 501.02(h)(2). Payment will not be made directly but will be considered subsidiary to other pay items.

(5) For reinforced zone backfill and drainage details, see "BACKFILL METHOD B".

(6) 1" Polystyrene Foam Board (Foam board will not be paid for directly, but will be considered incidental to the various bid items).

(7) Depth of undercut shown for permanent Wall No. 1. Undercut for temporary walls shall be a minimum of 2'-0".

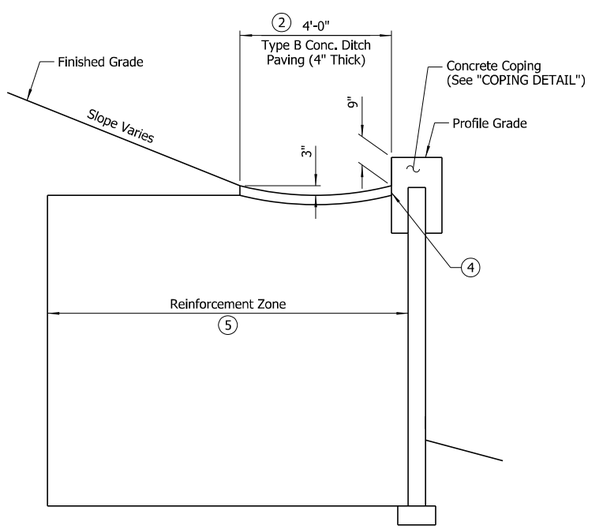

SECTION A-A

Scale: ½" = 1'-0"

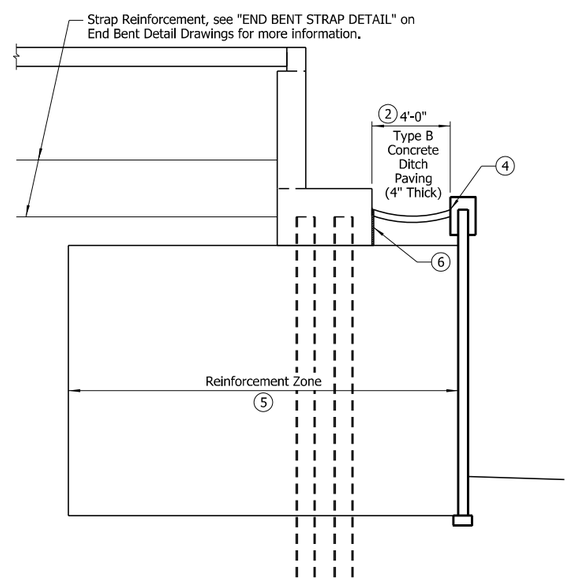

SECTION B-B

Scale: ¼" = 1'-0"

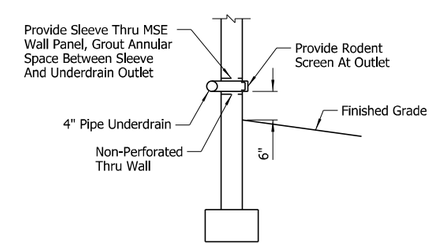

OUTLET DETAIL

No Scale

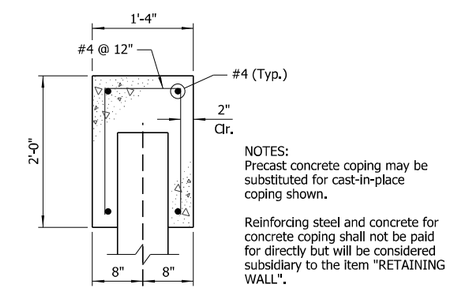

NOTES:
Precast concrete coping may be substituted for cast-in-place coping shown.

Reinforcing steel and concrete for concrete coping shall not be paid for directly but will be considered subsidiary to the item "RETAINING WALL".

COPING DETAIL

No Scale

STATE OF ARKANSAS
LICENSED PROFESSIONAL ENGINEER
No.21243
COLTON S. WYLIE

DIGITALLY SIGNED 6/30/2023
BRIDGE ENGINEER

SHEET 5 OF 9
DETAILS OF RETAINING WALLS

ROUTE SEC.

ARKANSAS STATE HIGHWAY COMMISSION

LITTLE ROCK, ARK.

DRAWN BY:	CSW	DATE:	FEB. 2022	FILENAME:	b061613_r5.dgn
CHECKED BY:	JHR	DATE:	JAN. 2023	SCALE:	As Shown
DESIGNED BY:	CSW	DATE:	FEB. 2022		

BRIDGE NO. 07605, 07606 DRAWING NO. 65972

6/29/2023 1:38:00 PM
abhall
WORKSPACE\ARDOT Bridge (2019)
L:\2021\21T01028 - ARDOT 061613 I-40 Strs and Apprs\Drawings\b061613_S605_WALL.dgn
REVISED DATE:

DATE REVISED	DATE FILMED	DATE REVISED	DATE FILMED	FED. ROAD DIST. NO.	STATE	FED. AID PROJ. NO.	SHEET NO.	TOTAL SHEETS
				6	ARK.			
				JOB NO.		061613	164	215
				07605, 07606		RETAINING WALLS		65973

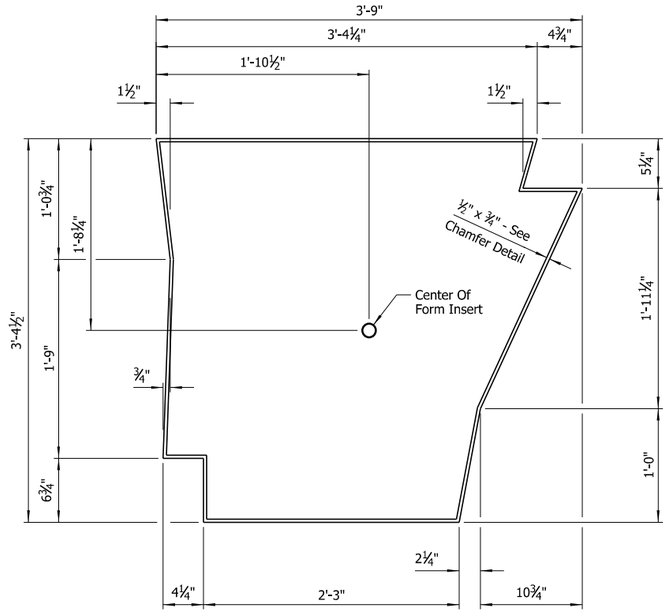

FORM INSERT DETAILS ON MSE WALLS

Scale: 1½" = 1'-0"

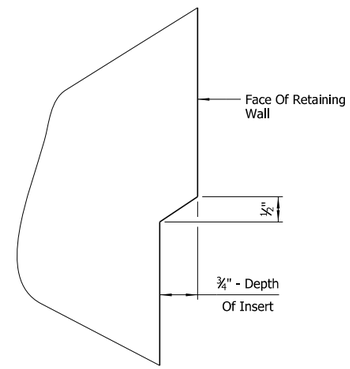

CHAMFER DETAIL

No Scale

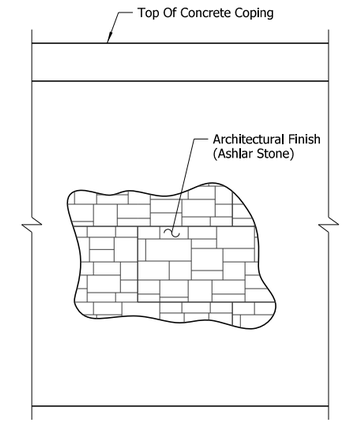

ARCHITECTURAL FINISH DETAIL

No Scale

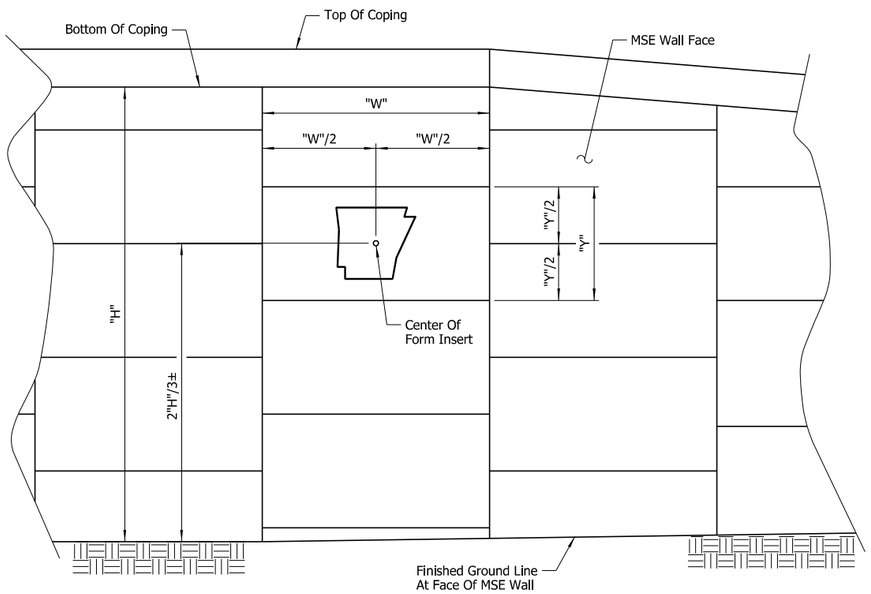

PLACEMENT AT MSE WALLS

Scale: 1½" = 1'-0"

TABLE OF QUANTITIES (WALL NOS. 1-4)

(FOR INFORMATION ONLY)

ITEM NO.	210	605	SP JOB 061613	SP JOB 061613	SP JOB 061613	SP JOB 061613
ITEM / UNIT	UNCLASSIFIED EXCAVATION	CONCRETE DITCH PAVING (TYPE B)	SELECT GRANULAR BACKFILL	RETAINING WALL	TEXTURED COATING FINISH	AGGREGATE BASE COURSE (CLASS 7) (2)
	CU. YD.	SQ. YD.	CU. YD.	SQ. FT.	SQ. YD.	CU. YD.
Wall No. 1 (F.A.P. BFP-0043 (37))	(1) 4,555	121	2,731	4,935	488	1,161
Wall No. 1 (F.A.P. TAPU-0043 (37))	(1) 117	3	70	127	13	30
Wall No. 1 (Total)	(1) 4,672	124	2,801	5,062	501	1,191
Wall No. 2 (F.A.P. BFP-0043 (37))	1,436	106	2,393	3,914	391	(3) 73
Wall No. 2 (F.A.P. TAPU-0043 (37))	43	3	71	117	12	(3) 2
Wall No. 2 (Total)	1,479	109	2,464	4,031	403	(3) 75
Wall No. 3	1,518	86	2,045	3,144	303	(3) 75
Wall No. 4	1,268	88	1,992	3,198	310	(3) 75

(1) Includes quantity for undercut areas

(2) Estimated quantity for backfill of undercut area

(3) If and when directed by the Engineer, quantity is an estimate of potential Aggregate Base Course (Class 7) needed in the event that localized undercut is deemed necessary.

GENERAL NOTES:

DESIGN SPECIFICATIONS: AASHTO LRFD Bridge Design Specifications (2017, 8th Edition)

SEISMIC ZONE: 2 S_{D1}= 0.24g Site Class = D (Wall Nos. 1 & 2)

SEISMIC ZONE: 3 S_{D1}= 0.33g Site Class = E (Wall Nos. 2 & 3)

4" Pipe underdrains shall be used for the full length of wall.

Elevations are approximate. Wall dimensions may vary depending on wall design selected.

Reinforcement placement and details for retaining walls may be affected by end bent construction and proposed roadway drainage structures. See End Bent Dwg. Nos. 65926-65930 and 65943-65947 for pile locations, cap details and wingwall details. See Roadway Plans for locations and details of drainage structures.

For ditch paving, see Std. Dwg. CDP-1.

See Special Provision "RETAINING WALLS" for additional information.

Boring logs may be obtained from the Construction Contract Development Section of the Program Management Division.

Preformed joint filler, joint sealer, polystyrene foam board, and pipe underdrains will not be paid for directly, but will be considered subsidiary to the item "RETAINING WALL".

An Architectural Finish (Ashlar Stone or approved equivalent) shall be applied to the face of the retaining walls. See Special Provision "RETAINING WALLS".

A Class 3 Textured Coating Finish shall be applied to the exposed face of the concrete wall panels and coping as specified in Special Provision "TEXTURED COATING FINISH" and in accordance with Subsection 802.19(b)(3).

STATE OF ARKANSAS
LICENSED PROFESSIONAL ENGINEER
No.21243
COLTON S. WYLIE

DIGITALLY SIGNED 8/14/2023
BRIDGE ENGINEER

SHEET 6 OF 9
DETAILS OF RETAINING WALLS

ROUTE SEC.

ARKANSAS STATE HIGHWAY COMMISSION

LITTLE ROCK, ARK.

DRAWN BY: CSW DATE: FEB. 2022 FILENAME: b061613_r6.dgn
CHECKED BY: JHR DATE: JAN. 2023 SCALE: No Scale
DESIGNED BY: CSW DATE: FEB. 2022

BRIDGE NO. 07605, 07606 DRAWING NO. 65973

abhall 8/14/2023 10:49:15 AM
WORKSPACE: ARDOT Bridge (2019)
L:\2021\21T01028 - ARDOT 061613 I-40 Strs and Apprs\Drawings\b061613_S606_WALL.dgn
REVISED DATE:

DATE REVISED	DATE FILMED	DATE REVISED	DATE FILMED	FED. ROAD DIST. NO.	STATE	FED. AID PROJ. NO.	SHEET NO.	TOTAL SHEETS
				6	ARK.			
				JOB NO.		061613	165	215
				07605, 07606		RETAINING WALLS		65974

SOIL BORINGS - WALL NOS. 1 & 2

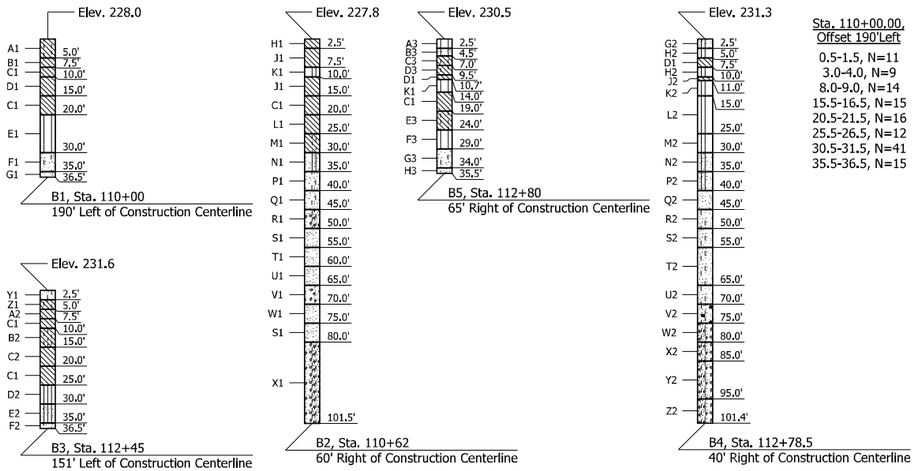

N-VALUES - WALL NOS. 1 & 2

Sta. 110+00.00, Offset 190'Left	Sta. 110+62.00, Offset 60' Right	Sta. 112+45.00, Offset 151' Left	Sta. 112+78.50, Offset 40' Right	Sta. 112+80.00, Offset 65' Right
0.5-1.5, N=11	0.5-1.5, N=13	0.5-1.5, N=10	0.5-1.5, N=18	0.5- 1.5,N=8
3.0-4.0, N=9	3.0-4.0, N=22	3.0-4.0, N=12	3.0-4.0, N=13	3.0- 4.0,N=8
8.0-9.0, N=14	5.5-6.5, N=19	5.5-6.5, N=18	8.0-9.0, N=19	5.0- 6.0,N=16
15.5-16.5, N=15	10.5-11.5, N=19	8.0-9.0, N=15	15.5-16.5, N=8	7.5- 8.5,N=16
20.5-21.5, N=16	15.5-16.5, N=11	15.5-16.5, N=8	20.5-21.5, N=8	14.5- 15.5,N=13
25.5-26.5, N=12	20.5-21.5, N=6	20.5-21.5, N=10	25.5-26.5, N=4	19.5- 20.5,N=11
30.5-31.5, N=41	25.5-26.5, N=15	25.5-26.5, N=16	30.5-31.5, N=24	24.5- 25.5,N=6
35.5-36.5, N=15	30.5-31.5, N=10	30.5-31.5, N=18	35.5-36.5, N=18	29.5- 30.5,N=23
	35.5-36.5, N=16	35.5-36.5, N=30	40.5-41.5, N=34	34.5- 35.5,N=15
	40.5-41.5, N=28		45.5-46.5, N=50	
	45.5-46.5, N=47		50.5-51.5, N=37	
	50.5-51.5, N=26		55.5-56.5, N=91	
	55.5-56.5, N=38		60.5-61.5, N=53	
	60.5-61.5, N=88		65.5-66.5, N=70	
	65.5-66.5, N=64		70.5-71.5, N=20	
	70.5-71.5, N=74		75.5-76.5, N=86	
	75.5-76.5, N=20		80.5-81.5, N=48	
	80.5-81.5, N=61		85.5-86.5, N=64	
	85.5-86.5, N=63		90.5-91.5, N=84	
	90.5-91.5, N=52		95.0-95.4, N=40(5")	
	95.5-96.5, N=66		100.5-101.4, N=78(11")	
	100.5-101.5, N=86			

BORING LEGEND - WALL NOS. 1 & 2

A1-Moist, Stiff, Brown Silty Clay
B1-Most, Reddish Brown Fat Clay
C1-Moist, Stiff, Reddish Brown Clay
D1-Moist, Reddish Brown Fat Clay
E1-Moist, Medium Dense, Light Gray Silt
F1-Moist, Dense, Light Gray Silty Sand
G1-Moist, Medium Dense, Light Brown Sand
H1-Moist, Stiff, Reddish Brown Lean Clay
J1-Moist, Very Stiff, Reddish Brown Clay
K1-Moist, Reddish Brown Silt
L1-Wet, Medium Stiff, Brown Lean Clay
M1-Wet, Stiff, Gray Silty Clay
N1-Moist, Loose, Brown Silt with Sand
P1-Wet, Medium Dense, Brown Silty Sand with Some Gravel
Q1-Wet, Medium Dense, Brown Poorly Graded Sand with Silt
R1-Wet, Dense, Brown Poorly Graded Sand with Silt and Gravel
S1-Wet, Medium Dense, Brown Sand with Some Gravel
T1-Wet, Dense, Brown Sand
U1-Wet, Very Dense, Brown Sand
V1-Sand and Gravel
W1-Wet, Very Dense, Brown Sand with Some Gravel
X1-Wet, Very Dense, Brown Poorly Graded Sand with Silt and Gravel
Y1-Moist, Loose, Brown Silty Sand
Z1-Moist, Medium Dense, Brown Silty Clay
A2-Moist, Stiff, Brown Clay
B2-Moist, Reddish Brown Silty Clay
C2-Moist, Medium Stiff, Brown Clay with Traces of Gravel
D2-Moist, Medium Dense, Light Brown Silt
E2-Moist, Medium Dense, Light Brown Sandy Silt
F2-Moist, Medium Dense, Light Gray Silty Sand
G2-Moist, Medium Dense, Brown Silt with Sand
H2-Moist, Medium Dense, Brown Silt
J2-Moist, Reddish Brown Lean Clay
K2-Wet, Reddish Brown Silt
L2-Moist, Loose, Reddish Brown Silt
M2-Moist, Very Loose, Brown Silt
N2-Moist, Medium Dense, Brown Silt with Fine Sand
P2-Wet, Medium Dense, Gray Fine Sandy Silt
Q2-Wet, Dense, Brown Silty Fine Sand with Traces of Gravel
R2-Wet, Dense, Gray Poorly Graded Fine Sand with Silt and Some Gravel
S2-Wet, Dense, Gray Silty Fine Sand with Some Gravel
T2-Wet, Very Dense, Brown Silty Fine Sand with Traces of Gravel
U2-Wet, Very Dense, Brown Silty Fine Sand
V2-Wet, Medium Dense, Brown Poorly Graded Fine Sand with Silt and Organic Matter (Wood)
W2-Wet, Very Dense, Gray Poorly Graded Fine Sand with Silt and Gravel
X2-Wet, Dense, Brown Well Graded Fine Sand with Silt and Gravel
Y2-Wet, Very Dense, Brown Poorly Graded Fine Sand with Silt and Gravel
Z2-Wet, Very Dense, Brown Silty Fine Sand with Gravel
A3-Moist, Loose, Brown Silt
B3-Moist, Loose, Brown Sandy Silt
C3-Moist, Very Stiff, Light Gray Silty Clay
D3-Moist, Very Stiff, Reddish Brown Silty Clay
E3-Wet, Stiff, Reddish Brown and Light Gray Silty Clay
F3-Wet, Loose, Light Brown Silt
G3-Wet, Medium Dense, Light Gray Silty Sand
H3-Wet, Medium Dense, Light Brown Sand

SOIL BORINGS - WALL NOS. 3 & 4

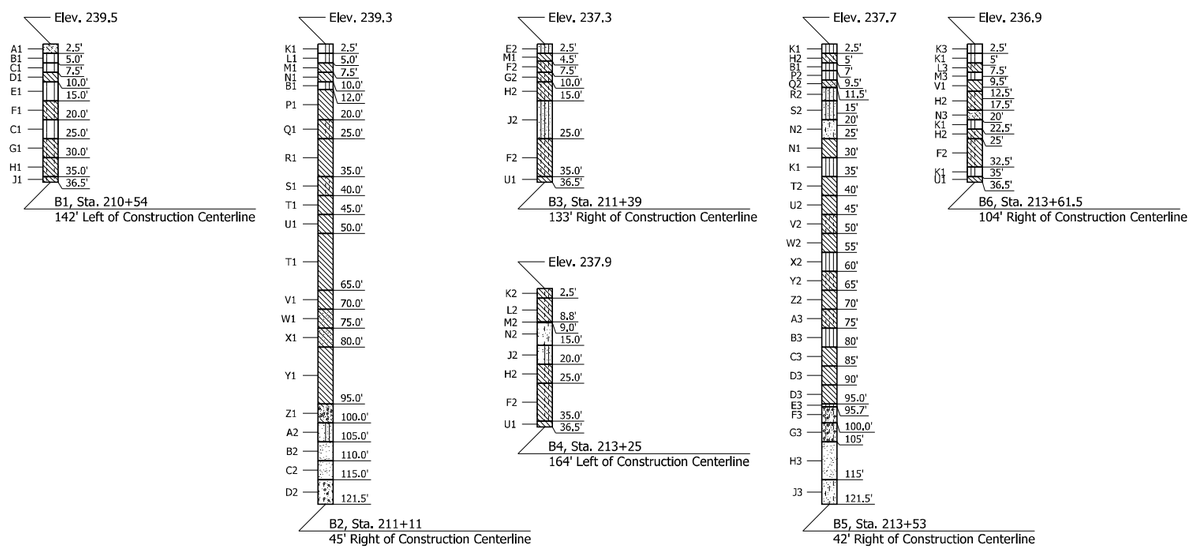

N-VALUES - WALL NOS. 3 & 4

Sta. 210+54.00, Offset 142' Left	Sta. 211+11.00, Offset 45' Right	Sta. 211+39.00, Offset 133' Right	Sta. 213+25.00, Offset 164' Left	Sta. 213+53.00, Offset 42' Right	Sta. 213+61.50, Offset 104' Right
0.5-1.5, N=9	0.5-1.5, N=17	0.5-1.5, N=6	0.5-1.5, N=12	0.5-1.5, N=22	0.5-1.5, N=6
5.5-6.5, N=11	3.0-4.0, N=9	5.0-6.0, N=12	5.5-6.5, N=23	3.0-4.0, N=18	3.0-4.0, N=22
10.5-11.5, N=12	8.0-9.0, N=16	8.0-9.0, N=33	9.5-10.5, N=21	7.5-8.5, N=19	5.5-6.5, N=16
15.5-16.5, N=8	12.5-13.5, N=14	10.5-11.5, N=23	15.5-16.5, N=18	12.0-13.0, N=14	10.0-11.0, N=23
20.5-21.5, N=16	15.5-16.5, N=13	12.5-13.5, N=26	20.5-21.5, N=24	15.5-16.5, N=12	13.0-14.0, N=24
25.5-26.5, N=10	20.5-21.5, N=14	15.5-16.5, N=20	25.5-26.5, N=10	20.5-21.5, N=17	15.5-16.5, N=26
30.5-31.5, N=8	25.5-26.5, N=11	19.5-20.5, N=24	30.5-31.5, N=14	25.5-26.5, N=18	18.0-19.0, N=25
35.5-36.5, N=10	30.5-31.5, N=12	25.5-26.5, N=13	35.5-36.5, N=7	30.5-31.5, N=13	20.5-21.5, N=17
	35.5-36.5, N=8	30.5-31.5, N=9		35.5-36.5, N=4	23.0-24.0, N=16
	40.5-41.5, N=12	35.5-36.5, N=5		40.5-41.5, N=7	25.5-26.5, N=13
	45.5-46.5, N=8			45.5-46.5, N=3	28.0-29.0, N=12
	50.5-51.5, N=9			50.5-51.5, N=8	30.5-31.5, N=10
	55.5-56.5, N=13			55.5-56.5, N=11	33.0-34.0, N=14
	60.5-61.5, N=12			60.5-61.5, N=13	35.5-36.5, N=5
	65.5-66.5, N=28			65.5-66.5, N=8	
	70.5-71.5, N=11			70.5-71.5, N=4	
	75.5-76.5, N=9			75.5-76.5, N=8	
	80.5-81.5, N=1			80.5-81.5, N=0	
	85.5- 6.5, N=0			85.5-86.5, N=0	
	90.5-91.5, N=1			90.5-91.5, N=1	
	95.5-96.5, N=12			95.5-96.5, N=90	
	100.5-101.5, N=32			100.5-101.5, N=29	
	105.0-105.4, N=40(5")			105.5-106.5, N=64	
	110.5-110.5, N=50(6")			110.0-110.4, N=30(5")	
	115.5-116.5, N=85			115.5-116.5, N=114	
	120.5-121.5, N=118			120.5-121.5, N=71	

BORING LEGEND - WALL NOS. 3 & 4

A1-Moist, Loose, Brown Clayey Sand
B1-Moist, Brown Silt
C1-Moist, Medium Dense, Light Brown Silt
D1-Moist, Light Brown Lean Clay
E1-Moist, Medium Dense, Light Gray Silt
F1-Moist, Medium Stiff, Light Gray Silty Clay
G1-Moist, Stiff, Light Gray Silty Clay
H1-Wet, Medium Stiff, Light Brown Silty Clay
J1-Wet, Stiff, Brown Silty Clay
K1-Moist, Medium Dense, Brown Silt
L1-Moist, Loose, Brown Silt
M1-Moist, Brown Lean Clay
N1-Moist, Very Stiff, Brown Lean Clay
P1-Moist, Stiff, Gray Lean Clay
Q1-Moist, Stiff, Gray Silty Clay*
R1-Moist, Stiff, Brown Lean Clay
S1-Moist, Medium Stiff, Brown Silty Clay
T1-Moist, Stiff, Brown Clay
U1-Moist, Medium Stiff, Brown Clay
V1-Moist, Very Stiff, Brown Clay
W1-Moist, Stiff, Brown Silty Clay with Sand and Traces of Gravel
X1-Moist, Stiff, Brown Clay with Sand
Y1-Moist, Very Soft, Brown Clay
Z1-Moist, Medium Dense, Light Gray Clayey Sand with Gravel
A2-Moist, Dense, Brown Silt with Sand and Trace Gravel
B2-Moist, Very Dense, Brown Sand
C2-Moist, Very Dense, Brown Sand with Traces of Gravel
D2-Moist, Very Dense, Brown Sand and Gravel
E2-Moist, Loose, Brown Sandy Silt
F2-Moist, Stiff, Brown Silty Clay
G2-Moist, Hard, Brown Silty Clay
H2-Moist, Very Stiff, Brown Silty Clay
J2-Moist, Medium Dense, Brown Sandy Silt
K2-Moist, Stiff, Brown and Gray Silty Clay
L2-Moist, Silty Clay
M2-Cemented Silty Sand
N2-Moist, Medium Dense, Brown Silty Sand
P2-Moist, Medium Dense, Gray Silt
Q2-Moist, Brown Sandy Lean Clay
R2-Moist, Medium Dense, Brown Sandy Silt*
S2-Moist, Medium Dense, Brown Silt with Fine Sand
T2-Moist, Soft, Reddish Brown Lean Clay
U2-Moist, Medium Stiff, Reddish Brown Lean Clay
V2-Moist, Soft, Reddish Brown Silty Clay
W2-Moist, Medium Stiff, Reddish Brown Clay
X2-Moist, Medium Dense, Reddish Brown Silt
Y2-Moist, Stiff, Reddish Brown Silty Clay
Z2-Moist, Medium Stiff, Brown Lean Clay
A3-Moist, Soft, Brown Silty Clay
B3-Moist, Loose, Reddish Brown Silt
C3-Moist, Very Soft, Reddish Brown Lean Clay
D3-Moist, Very Soft, Reddish Brown Fat Clay
E3-Moist, Very Dense, Reddish Brown Silt
F3-Moist, Very Dense, Gray Silty Fine Sand with Gravel
G3-Moist, Medium Dense, Gray Silty Fine Sand with Gravel
H3-Moist, Very Dense, Gray Silty Fine Sand with Traces of Gravel
J3-Moist, Very Dense, Gray Poorly Graded Fine Sand with Silt and Some of Gravel
K3-Moist, Loose, Brown Silt with Traces of Gravel
L3-Moist, Very Stiff, Gray Silty Clay
M3-Moist, Gray Silt
N3-Moist, Medium Dense, Brown Clayey Sand

STATE OF ARKANSAS
LICENSED PROFESSIONAL ENGINEER
No.21243
COLTON S. WYLIE

DIGITALLY SIGNED 6/30/2023
BRIDGE ENGINEER

SHEET 7 OF 9
DETAILS OF RETAINING WALLS

ROUTE SEC.

ARKANSAS STATE HIGHWAY COMMISSION

LITTLE ROCK, ARK.

DRAWN BY:	CSW	DATE:	FEB. 2022	FILENAME:	b061613_r7.dgn
CHECKED BY:	JHR	DATE:	JAN. 2023	SCALE:	No Scale
DESIGNED BY:	CSW	DATE:	FEB. 2022		

BRIDGE NO. 07605, 07606 DRAWING NO. 65974

abhall 6/29/2023 1:38:02 PM
WORKSPACE\ARDOT Bridge (2019)
L:\2021\21T01028 - ARDOT 061613 I-40 Strs and Apprs\Drawings\b061613_S607_WALL.dgn
REVISED DATE:

DATE REVISED	DATE FILMED	DATE REVISED	DATE FILMED	FED. ROAD DIST. NO.	STATE	FED. AID PROJ. NO.	SHEET NO.	TOTAL SHEETS
				6	ARK.			
				JOB NO.		061613	166	215
				07605		RETAINING WALLS		65975

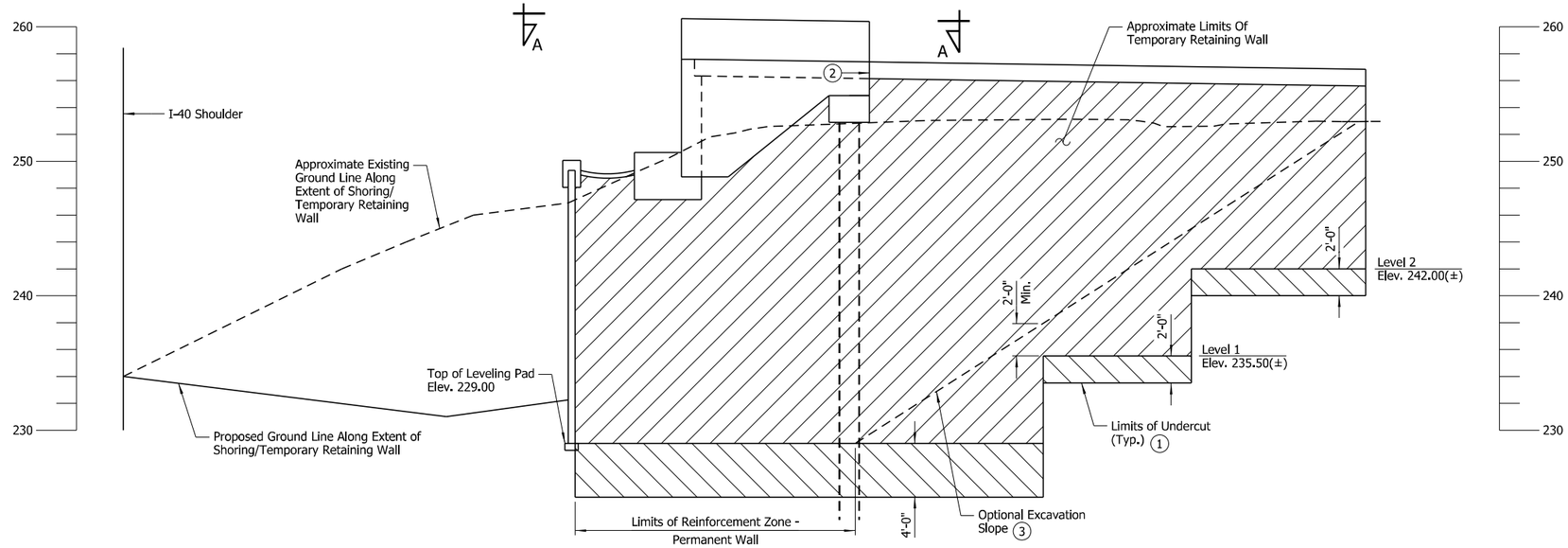

ELEVATION - TEMPORARY WALL NO. 1

Scale = 3/16" = 1'-0"

1. For undercut details, see Dwg. No. 65972.
2. Construct transverse segment of Temporary MSE Wall to retain embankment placed between wingwall and Temporary Wall.
3. Limits of Temporary Wall are based on Contractor utilizing the Optional Excavation Slope behind the reinforcement zone of the Permanent MSE Wall. If shoring is used, limits of Temporary Wall may be adjusted as required.

TEMPORARY WALL NO. 1 DESIGN PARAMETERS

Leveling Pad Elevation	Factored Bearing Resistance (KSF)	Minimum Strap Length (FT)
229.00	6.8	0.7 H
Level 1	5.2	0.8 H
Level 2	5.2	0.8 H

NOTE:
"H" shall be measured from the top of leveling pad elevation to the finished surface.

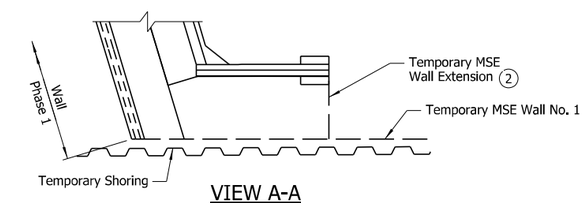

VIEW A-A

Scale = 1/8" = 1'-0"

TABLE OF QUANTITIES (TEMP. WALL NOS. 1 & 2)

(FOR INFORMATION ONLY)

ITEM NO.	210	SP JOB 061613	SP JOB 061613	SP JOB 061613
ITEM	UNCLASSIFIED EXCAVATION 1	SELECT GRANULAR BACKFILL	TEMPORARY RETAINING WALL	AGGREGATE BASE COURSE (CLASS 7) 2
UNIT	CU. YD.	CU. YD.	SQ. FT.	CU. YD.
Temp. Wall No. 1	296	302	1,264	38
Temp. Wall No. 2	434	504	1,235	23

1. Includes quantity for undercut areas
2. Estimated quantity for backfill of undercut areas

TEMPORARY WALL NO. 2 DESIGN PARAMETERS

Leveling Pad Elevation	Factored Bearing Resistance (KSF)	Minimum Strap Length (FT)
229.00	5.2	0.8 H
Level 1	5.2	0.8 H
Level 2	5.2	0.8 H

NOTE:
"H" shall be measured from the top of leveling pad elevation to the finished surface.

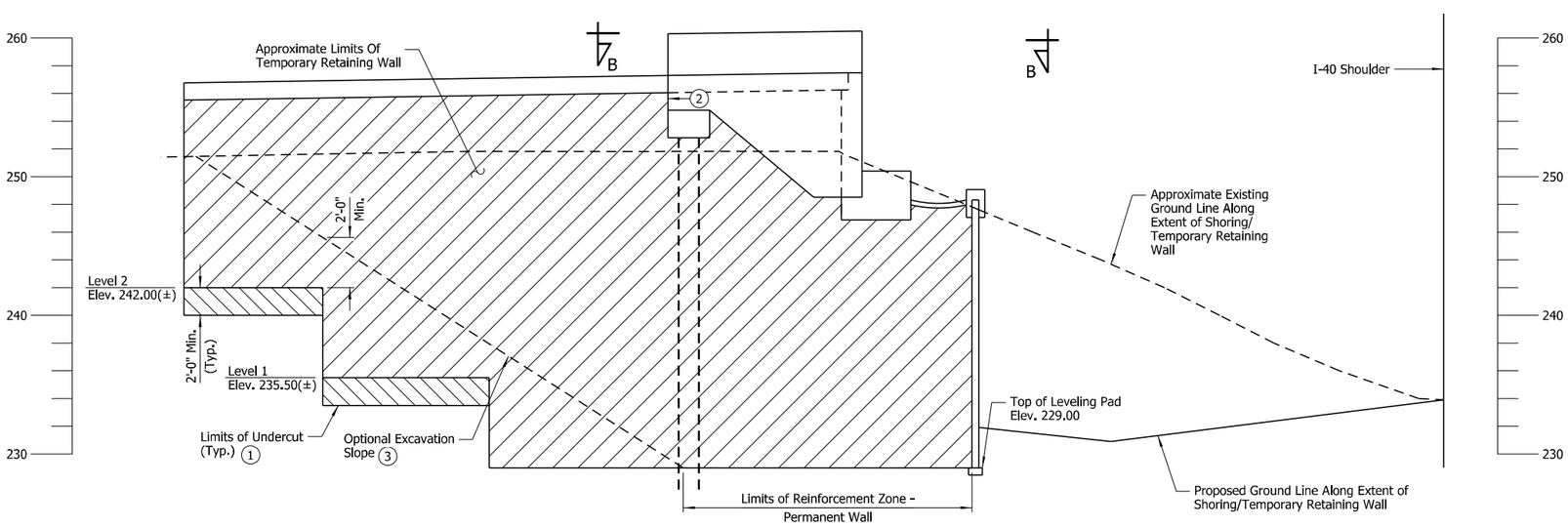

ELEVATION - TEMPORARY WALL NO. 2

Scale = 3/16" = 1'-0"

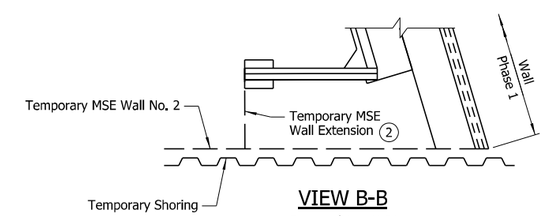

VIEW B-B

Scale = 1/8" = 1'-0"

STATE OF ARKANSAS
LICENSED PROFESSIONAL ENGINEER
No.21243
COLTON S. WYLIE

DIGITALLY SIGNED 6/30/2023
BRIDGE ENGINEER

SHEET 8 OF 9
DETAILS OF RETAINING WALLS

ROUTE SEC.

ARKANSAS STATE HIGHWAY COMMISSION

LITTLE ROCK, ARK.

DRAWN BY:	CSW	DATE:	FEB. 2022	FILENAME:	b061613_r8.dgn
CHECKED BY:	JHR	DATE:	JAN. 2023	SCALE:	As Shown
DESIGNED BY:	CSW	DATE:	FEB. 2022		

BRIDGE NO. 07605 DRAWING NO. 65975

abhall 6/29/2023 1:38:03 PM
WORKSPACE:ARDOT Bridge (2019)
L:\2021\21T01028 - ARDOT 061613 I-40 Strs and Apprs\Drawings\b061613_S701_WALL.dgn
REVISED DATE:

DATE REVISED	DATE FILMED	DATE REVISED	DATE FILMED	FED. ROAD DIST. NO.	STATE	FED. AID PROJ. NO.	SHEET NO.	TOTAL SHEETS
				6	ARK.			
				JOB NO.		061613	167	215
				07606		RETAINING WALLS		65976

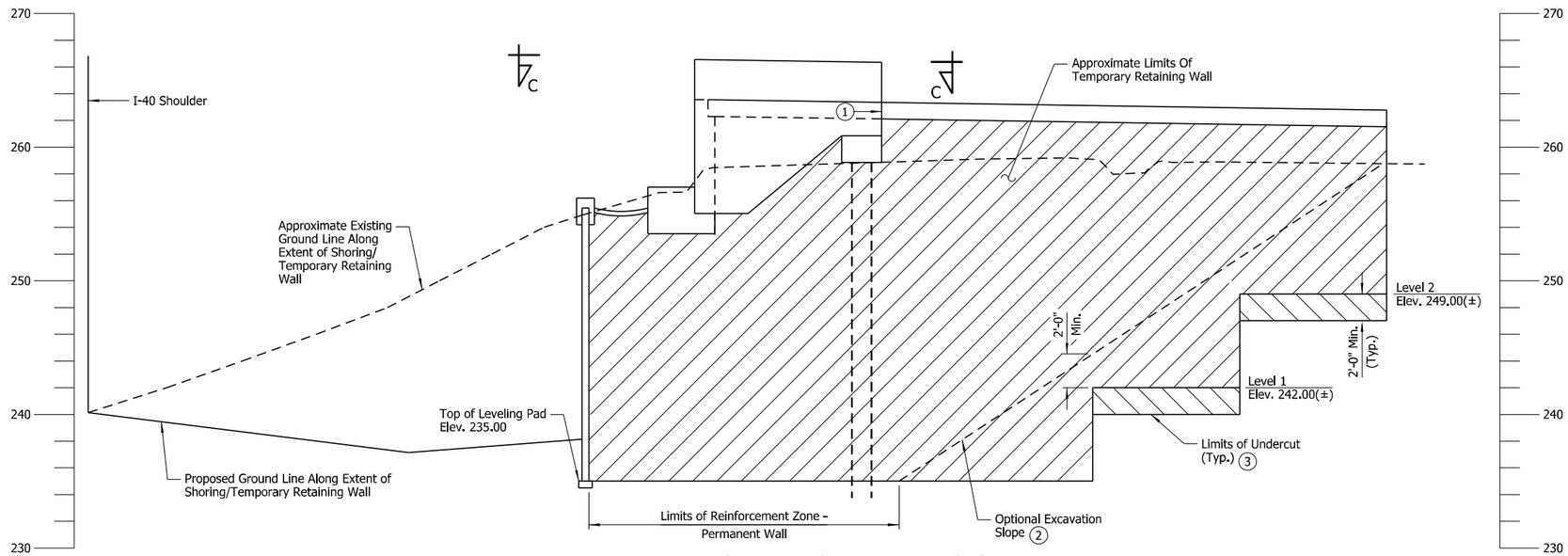

ELEVATION - TEMPORARY WALL NO. 3

Scale = 3/16" = 1'-0"

(1) Construct transverse segment of Temporary MSE Wall to retain embankment placed between wingwall and Temporary Wall.

(2) Limits of Temporary Wall are based on Contractor utilizing the Optional Excavation Slope behind the reinforcement zone of the Permanent MSE Wall. If shoring is used, limits of Temporary Wall may be adjusted as required.

(3) For undercut details, see Dwg. No. 65972.

TEMPORARY WALL NO. 3 DESIGN PARAMETERS

Leveling Pad Elevation	Factored Bearing Resistance (KSF)	Minimum Strap Length (FT)
235.00	5.2	0.8 H
Level 1	5.2	0.8 H
Level 2	5.2	0.8 H

NOTE:
"H" shall be measured from the top of leveling pad elevation to the finished surface.

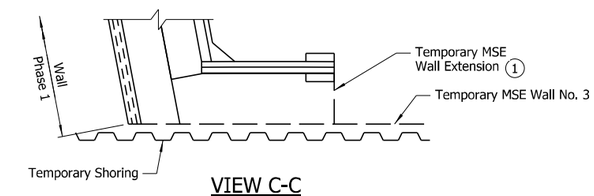

VIEW C-C

Scale = 1/8" = 1'-0"

TABLE OF QUANTITIES (TEMP. WALL NOS. 3 & 4)

(FOR INFORMATION ONLY)

ITEM NO.	210	SP JOB 061613	SP JOB 061613	SP JOB 061613
ITEM	UNCLASSIFIED EXCAVATION (1)	SELECT GRANULAR BACKFILL	TEMPORARY RETAINING WALL	AGGREGATE BASE COURSE (CLASS 7) (2)
UNIT	CU. YD.	CU. YD.	SQ. FT.	CU. YD.
Temp. Wall No. 3	448	492	1,296	22
Temp. Wall No. 4	414	464	1,248	20

(1) Includes quantity for undercut areas

(2) Estimated quantity for backfill of undercut areas

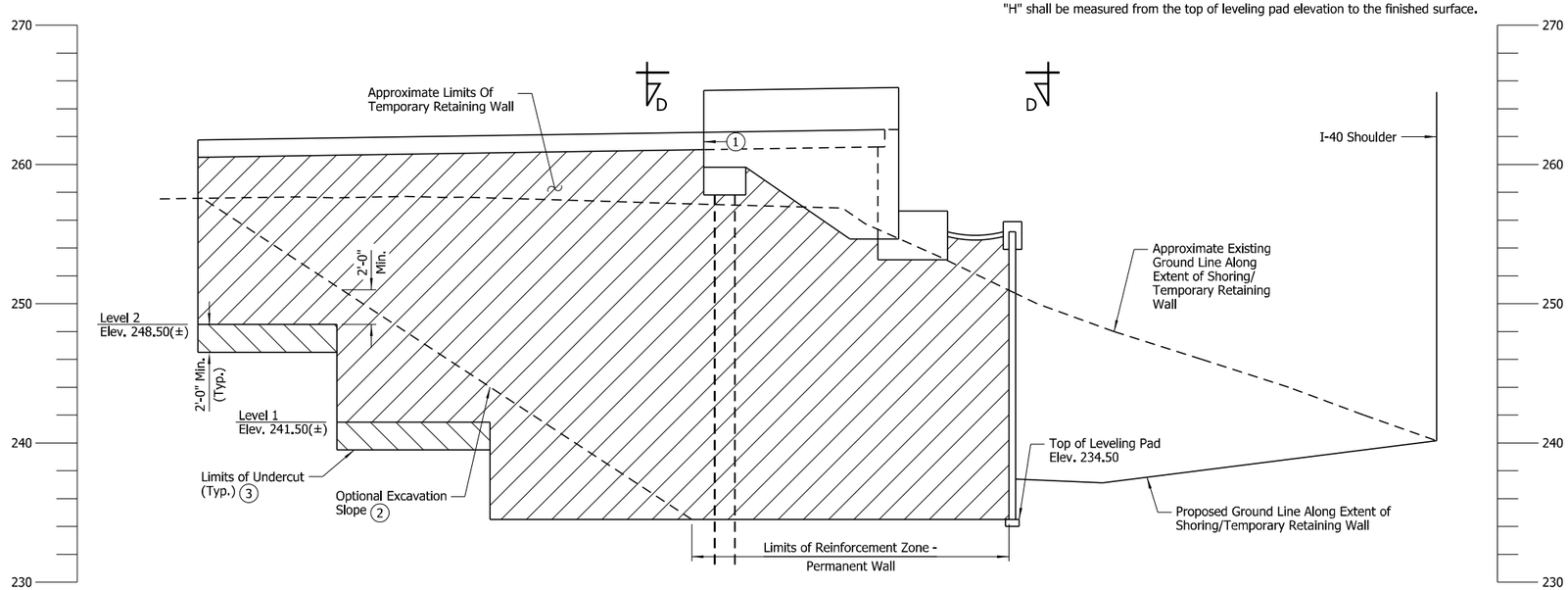

ELEVATION - TEMPORARY WALL NO. 4

Scale = 3/16" = 1'-0"

TEMPORARY WALL NO. 4 DESIGN PARAMETERS

Leveling Pad Elevation	Factored Bearing Resistance (KSF)	Minimum Strap Length (FT)
234.50	5.2	0.8 H
Level 1	5.2	0.8 H
Level 2	5.2	0.8 H

NOTE:
"H" shall be measured from the top of leveling pad elevation to the finished surface.

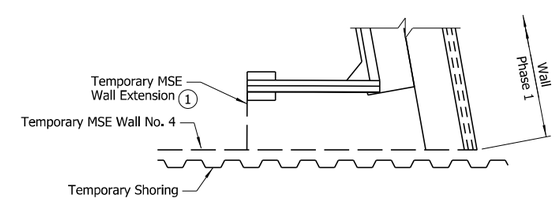

VIEW D-D

Scale = 1/8" = 1'-0"

STATE OF ARKANSAS
LICENSED PROFESSIONAL ENGINEER
No.21243
COLTON S. WYLIE

DIGITALLY SIGNED 6/30/2023
BRIDGE ENGINEER

SHEET 9 OF 9
DETAILS OF RETAINING WALLS

ROUTE SEC.

ARKANSAS STATE HIGHWAY COMMISSION

LITTLE ROCK, ARK.

DRAWN BY:	CSW	DATE:	FEB. 2022	FILENAME:	b061613_r9.dgn
CHECKED BY:	JHR	DATE:	JAN. 2023	SCALE:	As Shown
DESIGNED BY:	CSW	DATE:	FEB. 2022		

BRIDGE NO. 07606 DRAWING NO. 65976

abhall 6/29/2023 1:38:04 PM
WORKSPACE\ARDOT Bridge (2019)
L:\2021\21T01028 - ARDOT 061613 I-40 Strs and Apprs\Drawings\b061613_S702_WALL.dgn
REVISED DATE:

DATE REVISED	DATE REVISED	FED.RD. DIST.NO.	STATE	JOB NO.	SHEET NO.	TOTAL SHEETS
		6	ARK.	061613	168	215
		CROSS SECTIONS				

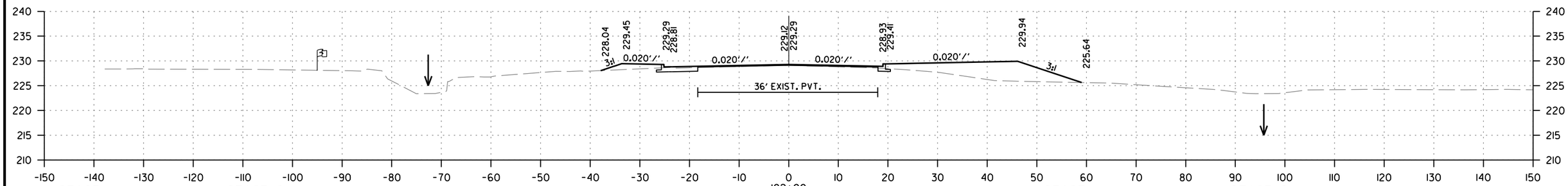

STAGE 1
CUT AREA 1 SQ.FT.
FILL AREA 92 SQ.FT.

STAGE 2
CUT AREA 6 SQ.FT.
FILL AREA 10 SQ.FT.

102+00
END 100' TRANSITION
BEGIN JOB 061613
BEGIN SITE 1
STA. 101+90 END 90' TAPER

STAGE 1
CUT VOLUME 1 CU.YD.
FILL VOLUME 101 CU.YD.

STAGE 2
CUT VOLUME 7 CU.YD.
FILL VOLUME 12 CU.YD.

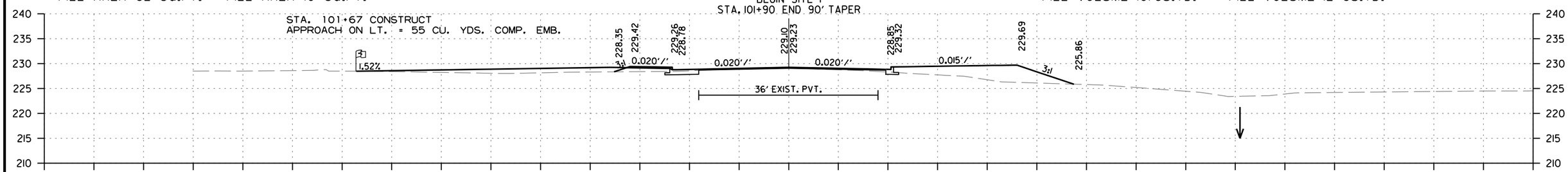

STAGE 1
CUT AREA 1 SQ.FT.
FILL AREA 73 SQ.FT.

STAGE 2
CUT AREA 5 SQ.FT.
FILL AREA 9 SQ.FT.

101+67

STAGE 1
CUT VOLUME 1 CU.YD.
FILL VOLUME 77 CU.YD.

STAGE 2
CUT VOLUME 7 CU.YD.
FILL VOLUME 16 CU.YD.

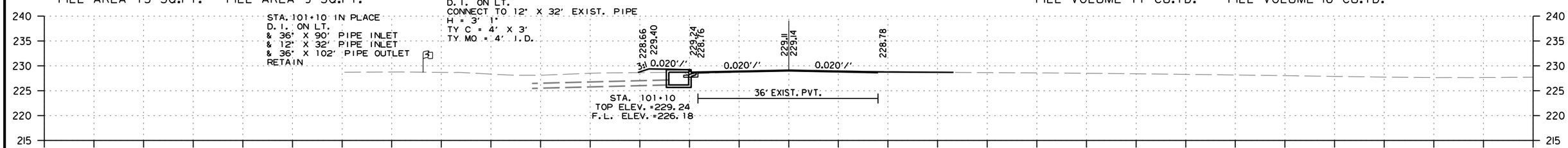

STAGE 1
CUT AREA 0 SQ.FT.
FILL AREA 0 SQ.FT.

STAGE 2
CUT AREA 2 SQ.FT.
FILL AREA 6 SQ.FT.

101+10

STAGE 1
CUT VOLUME 0 CU.YD.
FILL VOLUME 0 CU.YD.

STAGE 2
CUT VOLUME 1 CU.YD.
FILL VOLUME 2 CU.YD.

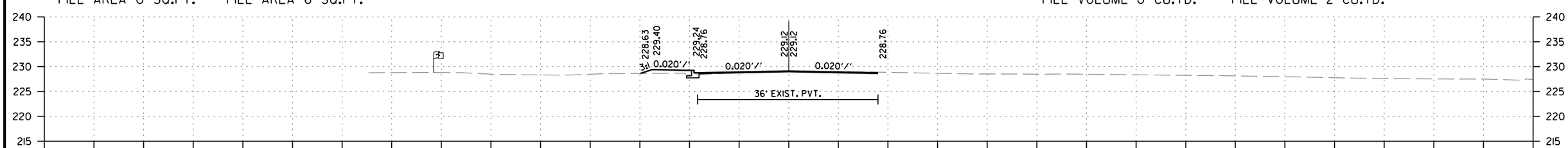

STAGE 1
CUT AREA 0 SQ.FT.
FILL AREA 0 SQ.FT.

STAGE 2
CUT AREA 1 SQ.FT.
FILL AREA 7 SQ.FT.

101+00
BEGIN 90' TAPER
BEGIN 100' TRANSITION

STAGE 1
CUT VOLUME 0 CU.YD.
FILL VOLUME 0 CU.YD.

STAGE 2
CUT VOLUME 0 CU.YD.
FILL VOLUME 0 CU.YD.

HWY. 31
STA. 101+00 TO STA. 102+00

MM41715 7/24/2023
R061613.DGN

DATE REVISED	DATE REVISED	FED.RD. DIST.NO.	STATE	JOB NO.	SHEET NO.	TOTAL SHEETS
		6	ARK.	061613	169	215
		CROSS SECTIONS				

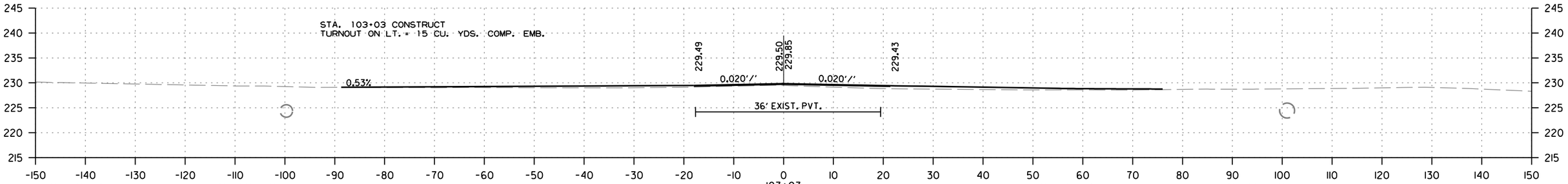

STAGE 1
CUT AREA 0 SQ.FT.
FILL AREA 0 SQ.FT.

STAGE 2
CUT AREA 0 SQ.FT.
FILL AREA 0 SQ.FT.

STAGE 1
CUT VOLUME 0 CU.YD.
FILL VOLUME 0 CU.YD.

STAGE 2
CUT VOLUME 0 CU.YD.
FILL VOLUME 0 CU.YD.

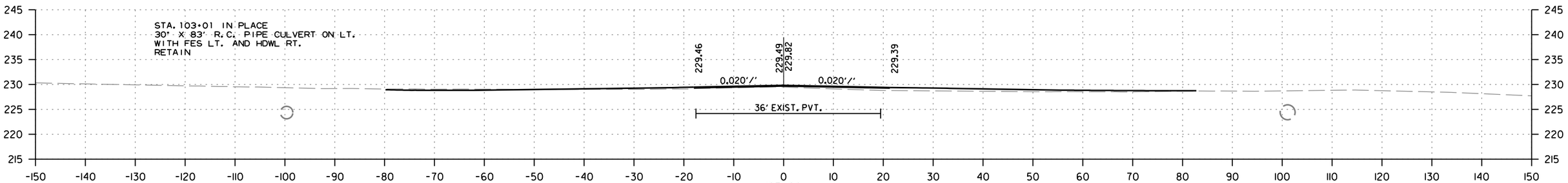

STAGE 1
CUT AREA 0 SQ.FT.
FILL AREA 0 SQ.FT.

STAGE 2
CUT AREA 0 SQ.FT.
FILL AREA 0 SQ.FT.

STAGE 1
CUT VOLUME 0 CU.YD.
FILL VOLUME 0 CU.YD.

STAGE 2
CUT VOLUME 0 CU.YD.
FILL VOLUME 0 CU.YD.

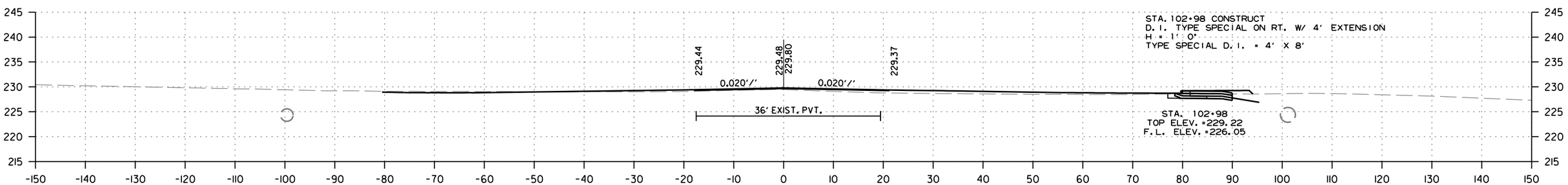

STAGE 1
CUT AREA 0 SQ.FT.
FILL AREA 0 SQ.FT.

STAGE 2
CUT AREA 0 SQ.FT.
FILL AREA 0 SQ.FT.

STAGE 1
CUT VOLUME 0 CU.YD.
FILL VOLUME 0 CU.YD.

STAGE 2
CUT VOLUME 0 CU.YD.
FILL VOLUME 0 CU.YD.

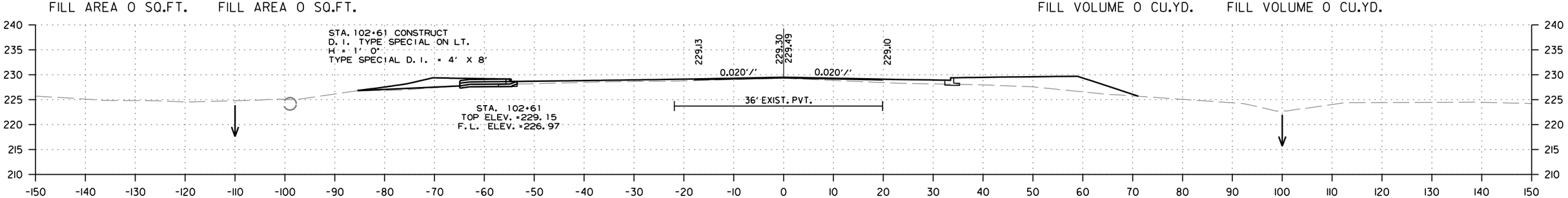

STAGE 1
CUT AREA 0 SQ.FT.
FILL AREA 0 SQ.FT.

STAGE 2
CUT AREA 0 SQ.FT.
FILL AREA 0 SQ.FT.

STAGE 1
CUT VOLUME 1 CU.YD.
FILL VOLUME 104 CU.YD.

STAGE 2
CUT VOLUME 7 CU.YD.
FILL VOLUME 11 CU.YD.

HWY. 31
STA. 102+61 TO STA. 103+03

MM41715 7/24/2023
R061613.DGN

DATE REVISED	DATE REVISED	FED.RD. DIST.NO.	STATE	JOB NO.	SHEET NO.	TOTAL SHEETS
		6	ARK.	061613	170	215
		CROSS SECTIONS				

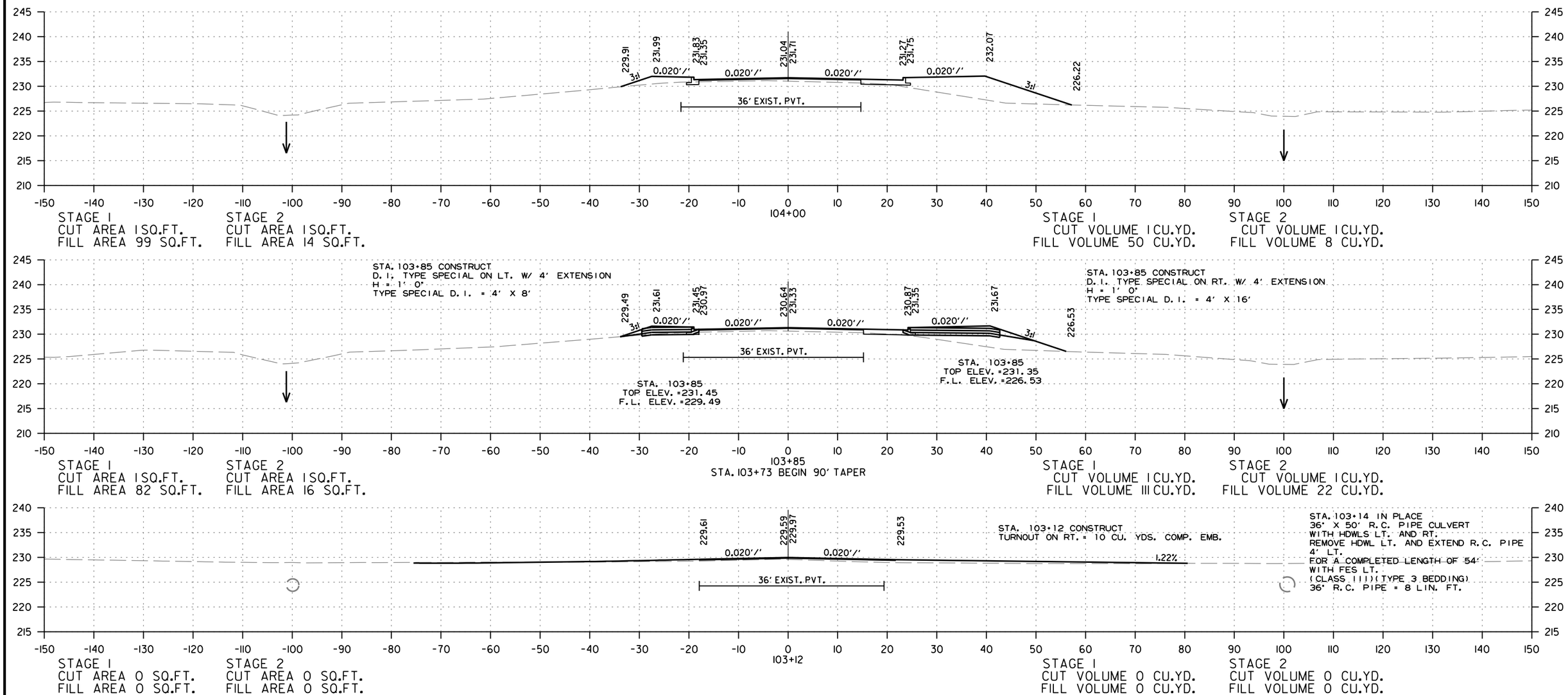

HWY. 31
STA. 103+12 TO STA. 104+00

MM41715 7/24/2023
R061613.DGN

DATE REVISED	DATE REVISED	FED.RD. DIST.NO.	STATE	JOB NO.	SHEET NO.	TOTAL SHEETS
		6	ARK.	061613	171	215
		CROSS SECTIONS				

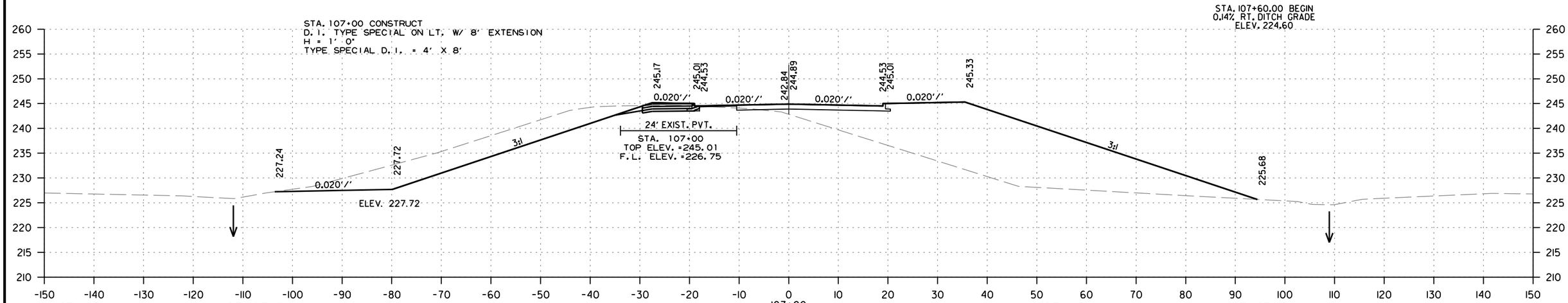

STAGE 1
CUT AREA 1 SQ.FT.
FILL AREA 724 SQ.FT.

STAGE 2
CUT AREA 239 SQ.FT.
FILL AREA 4 SQ.FT.

STAGE 1
CUT VOLUME 2 CU.YD.
FILL VOLUME 2017 CU.YD.

STAGE 2
CUT VOLUME 743 CU.YD.
FILL VOLUME 19 CU.YD.

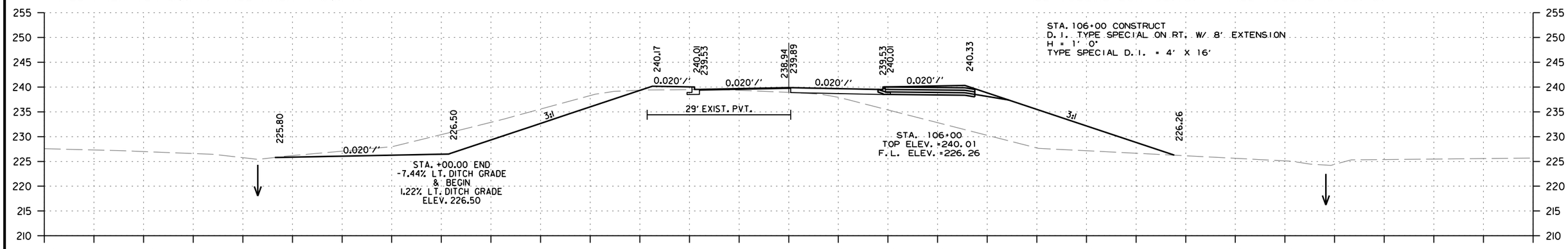

STAGE 1
CUT AREA 0 SQ.FT.
FILL AREA 356 SQ.FT.

STAGE 2
CUT AREA 162 SQ.FT.
FILL AREA 6 SQ.FT.

STAGE 1
CUT VOLUME 2 CU.YD.
FILL VOLUME 998 CU.YD.

STAGE 2
CUT VOLUME 304 CU.YD.
FILL VOLUME 26 CU.YD.

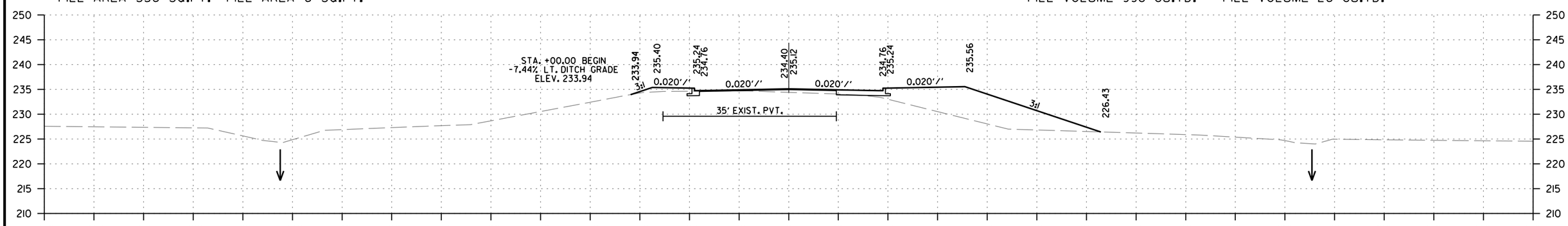

STAGE 1
CUT AREA 1 SQ.FT.
FILL AREA 174 SQ.FT.

STAGE 2
CUT AREA 2 SQ.FT.
FILL AREA 8 SQ.FT.

STAGE 1
CUT VOLUME 4 CU.YD.
FILL VOLUME 506 CU.YD.

STAGE 2
CUT VOLUME 6 CU.YD.
FILL VOLUME 41 CU.YD.

HWY. 31
STA. 105+00 TO STA. 107+00

DATE REVISED	DATE REVISED	FED.RD. DIST.NO.	STATE	JOB NO.	SHEET NO.	TOTAL SHEETS
		6	ARK.	061613	172	215
		CROSS SECTIONS				

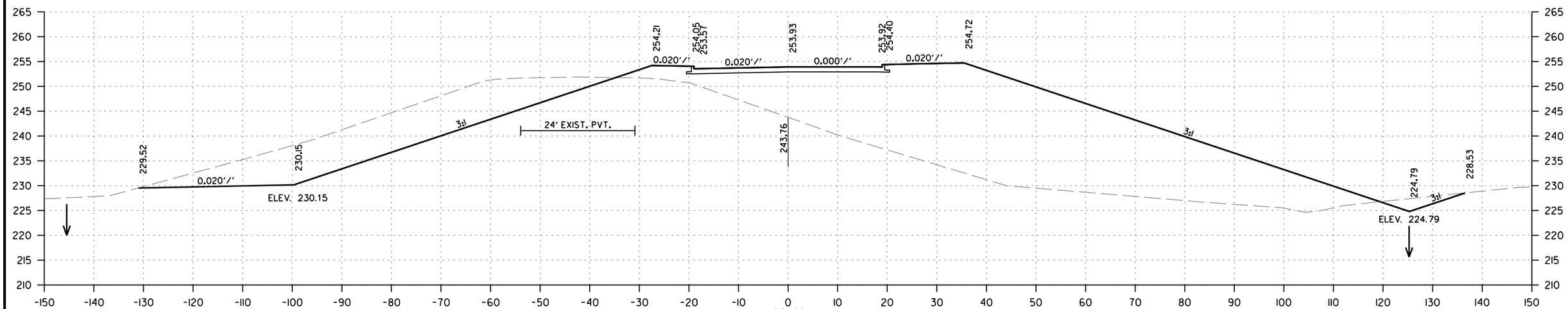

STAGE 1
CUT AREA 22 SQ.FT.
FILL AREA 1786 SQ.FT.

STAGE 2
CUT AREA 547 SQ.FT.
FILL AREA 17 SQ.FT.

109+00
STA. 108+40.67 BEGIN SUPERELEVATION (N.C.)

STAGE 1
CUT VOLUME 46 CU.YD.
FILL VOLUME 5581 CU.YD.

STAGE 2
CUT VOLUME 1719 CU.YD.
FILL VOLUME 54 CU.YD.

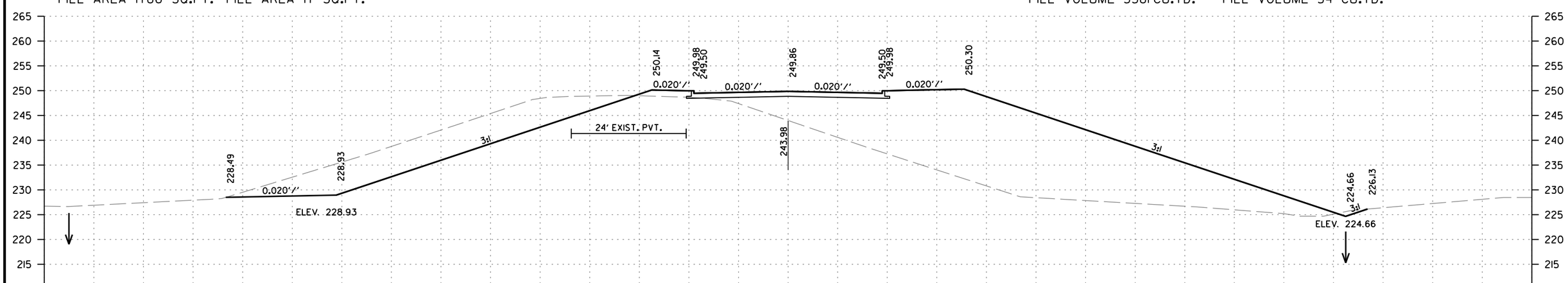

STAGE 1
CUT AREA 3 SQ.FT.
FILL AREA 1228 SQ.FT.

STAGE 2
CUT AREA 381 SQ.FT.
FILL AREA 12 SQ.FT.

108+00

STAGE 1
CUT VOLUME 7 CU.YD.
FILL VOLUME 3615 CU.YD.

STAGE 2
CUT VOLUME 1148 CU.YD.
FILL VOLUME 30 CU.YD.

HWY. 31
STA. 108+00 TO STA. 109+00

MM41715 7/24/2023
R061613.DGN

DATE REVISED	DATE REVISED	FED.RD. DIST.NO.	STATE	JOB NO.	SHEET NO.	TOTAL SHEETS
		6	ARK.	061613	173	215
		CROSS SECTIONS				

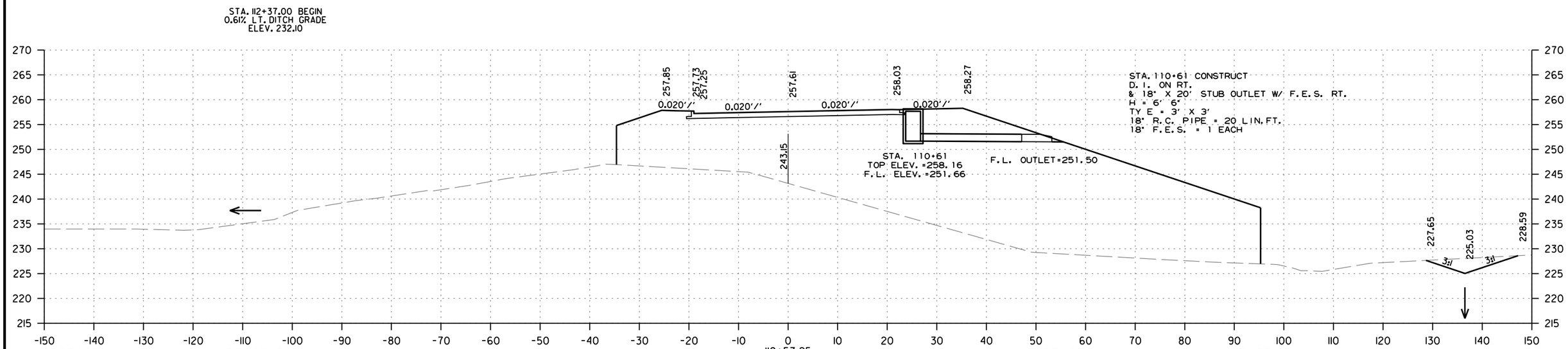

STAGE 1
CUT AREA 0 SQ.FT.
FILL AREA 2219 SQ.FT.

STAGE 2
CUT AREA 0 SQ.FT.
FILL AREA 0 SQ.FT.

STAGE 1
CUT VOLUME 24 CU.YD.
FILL VOLUME 4746 CU.YD.

STAGE 2
CUT VOLUME 762 CU.YD.
FILL VOLUME 0 CU.YD.

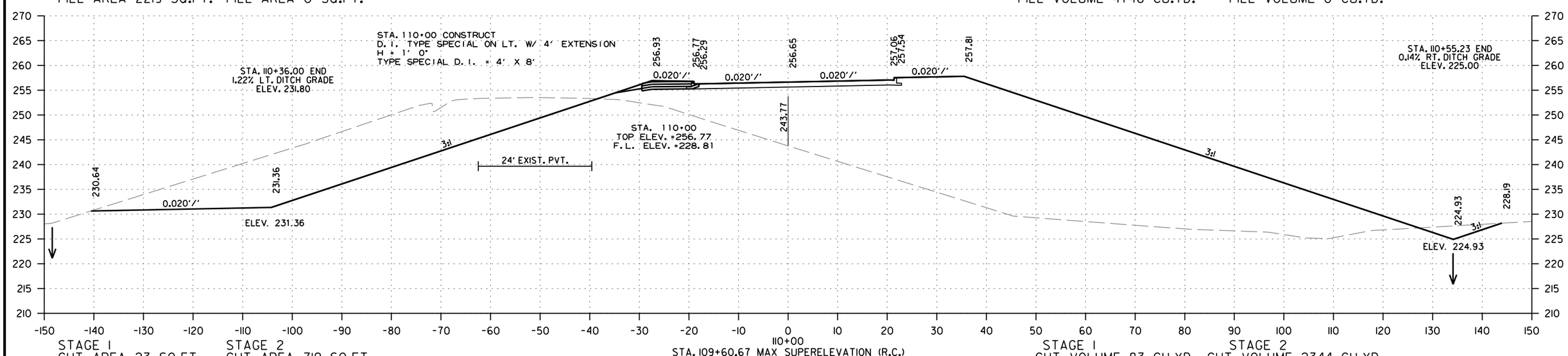

STAGE 1
CUT AREA 23 SQ.FT.
FILL AREA 2258 SQ.FT.

STAGE 2
CUT AREA 719 SQ.FT.
FILL AREA 0 SQ.FT.

STAGE 1
CUT VOLUME 83 CU.YD.
FILL VOLUME 7489 CU.YD.

STAGE 2
CUT VOLUME 2344 CU.YD.
FILL VOLUME 31 CU.YD.

HWY. 31
STA. 110+00 TO STA. 110+57.25

MM41715 7/24/2023
R06161 3.DGN

DATE REVISED	DATE REVISED	FED.RD. DIST.NO.	STATE	JOB NO.	SHEET NO.	TOTAL SHEETS
		6	ARK.	061613	174	215
		CROSS SECTIONS				

STA. 113+20.00 BEGIN
0.86% RT. DITCH GRADE
ELEV. 222.38

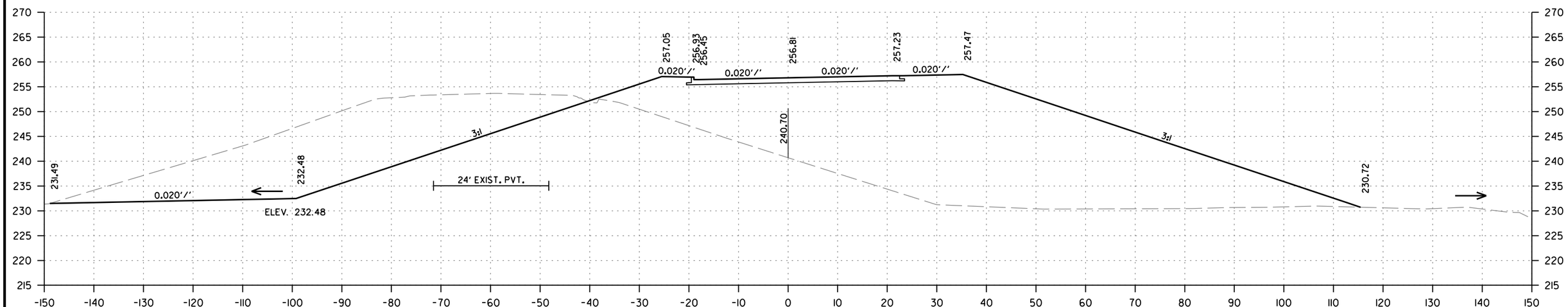

STAGE 1
CUT AREA 0 SQ.FT.
FILL AREA 2167 SQ.FT.

STAGE 2
CUT AREA 937 SQ.FT.
FILL AREA 0 SQ.FT.

STAGE 1
CUT VOLUME 0 CU.YD.
FILL VOLUME 1204 CU.YD.

STAGE 2
CUT VOLUME 712 CU.YD.
FILL VOLUME 0 CU.YD.

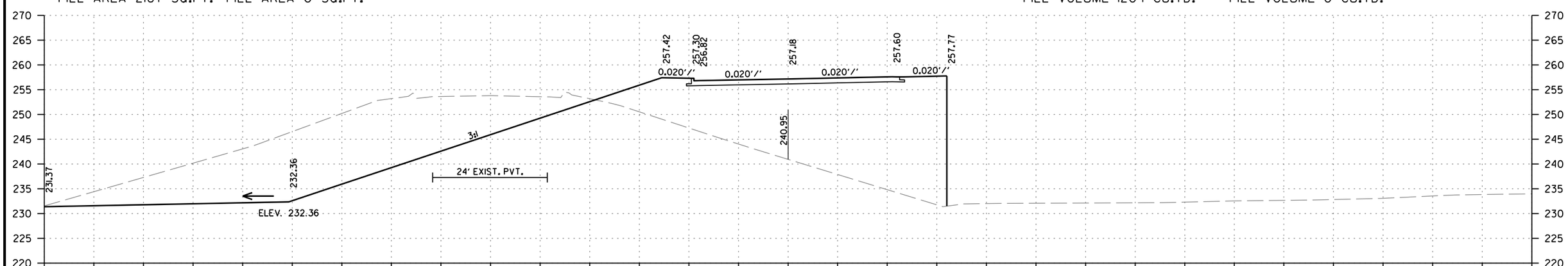

STAGE 1
CUT AREA 0 SQ.FT.
FILL AREA 1007 SQ.FT.

STAGE 2
CUT AREA 940 SQ.FT.
FILL AREA 0 SQ.FT.

STAGE 1
CUT VOLUME 0 CU.YD.
FILL VOLUME 0 CU.YD.

STAGE 2
CUT VOLUME 0 CU.YD.
FILL VOLUME 0 CU.YD.

HWY. 31
STA. 112+79.51 TO STA. 113+00

MM41715 7/24/2023
R061613.DGN

DATE REVISED	DATE REVISED	FED.RD. DIST.NO.	STATE	JOB NO.	SHEET NO.	TOTAL SHEETS
		6	ARK.	061613	175	215
		CROSS SECTIONS				

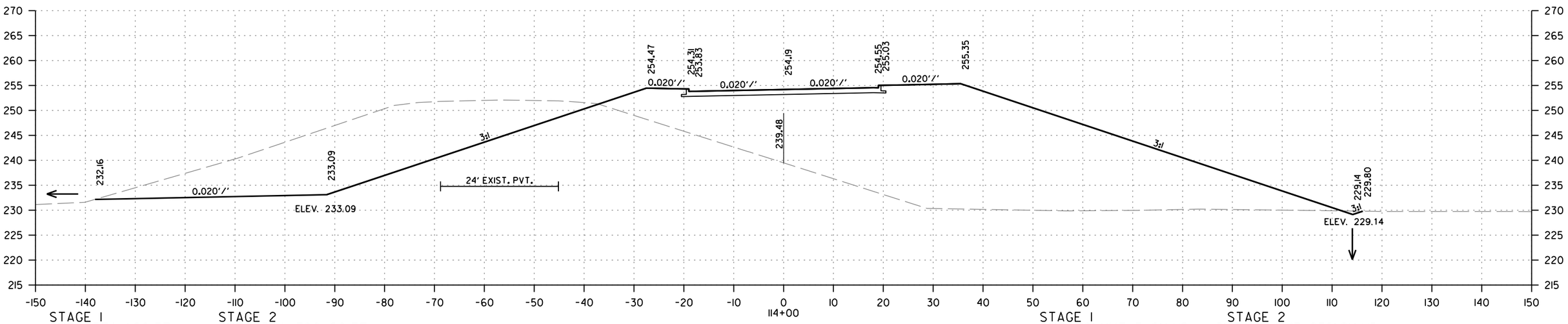

STAGE 1
CUT AREA 1 SQ.FT.
FILL AREA 1970 SQ.FT.

STAGE 2
CUT AREA 780 SQ.FT.
FILL AREA 0 SQ.FT.

STAGE 1
CUT VOLUME 3 CU.YD.
FILL VOLUME 5879 CU.YD.

STAGE 2
CUT VOLUME 2321 CU.YD.
FILL VOLUME 0 CU.YD.

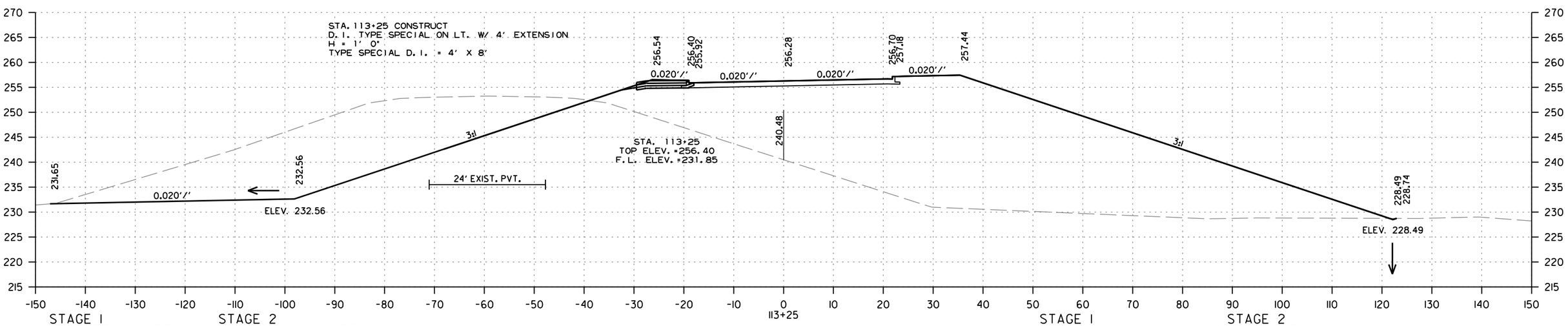

STAGE 1
CUT AREA 1 SQ.FT.
FILL AREA 2263 SQ.FT.

STAGE 2
CUT AREA 891 SQ.FT.
FILL AREA 0 SQ.FT.

STAGE 1
CUT VOLUME 0 CU.YD.
FILL VOLUME 2051 CU.YD.

STAGE 2
CUT VOLUME 846 CU.YD.
FILL VOLUME 0 CU.YD.

HWY. 31
STA. 113+25 TO STA. 114+00

MM41715 7/24/2023
R061613.DGN

DATE REVISED	DATE REVISED	FED.RD. DIST.NO.	STATE	JOB NO.	SHEET NO.	TOTAL SHEETS
		6	ARK.	061613	176	215
		CROSS SECTIONS				

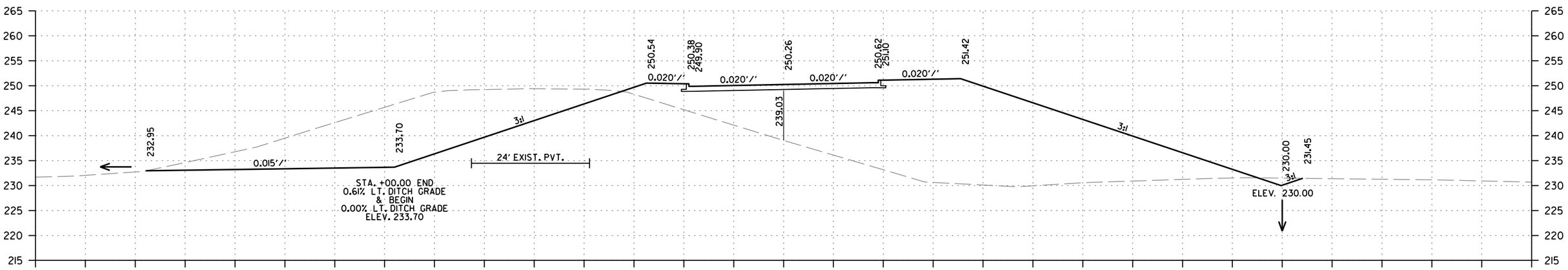

STAGE 1
CUT AREA 7 SQ.FT.
FILL AREA 1397 SQ.FT.

STAGE 2
CUT AREA 633 SQ.FT.
FILL AREA 0 SQ.FT.

STAGE 1
CUT VOLUME 8 CU.YD.
FILL VOLUME 2247 CU.YD.

STAGE 2
CUT VOLUME 989 CU.YD.
FILL VOLUME 0 CU.YD.

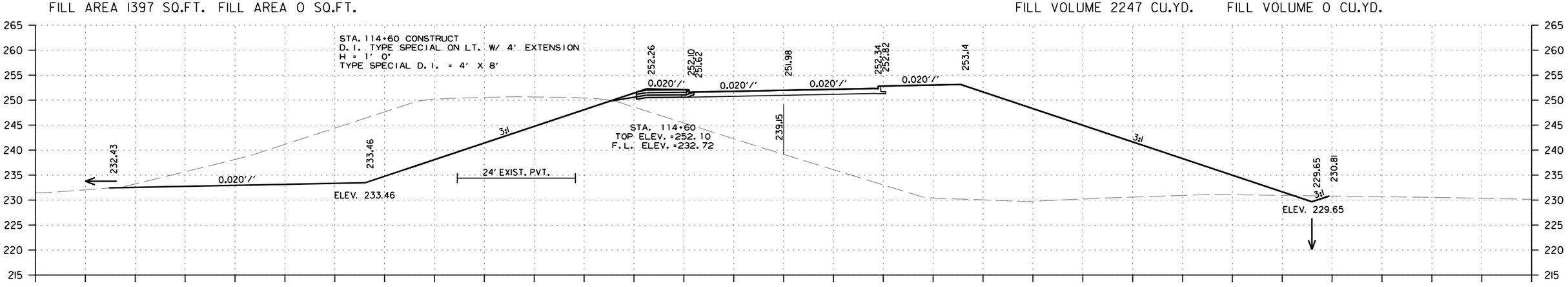

STAGE 1
CUT AREA 4 SQ.FT.
FILL AREA 1636 SQ.FT.

STAGE 2
CUT AREA 702 SQ.FT.
FILL AREA 0 SQ.FT.

STAGE 1
CUT VOLUME 6 CU.YD.
FILL VOLUME 4007 CU.YD.

STAGE 2
CUT VOLUME 1647 CU.YD.
FILL VOLUME 0 CU.YD.

HWY. 31
STA. 114+60 TO STA. 115+00

WM41715 7/24/2023
R061613.DGN

DATE REVISED	DATE REVISED	FED.RD. DIST.NO.	STATE	JOB NO.	SHEET NO.	TOTAL SHEETS
		6	ARK.	061613	177	215
		CROSS SECTIONS				

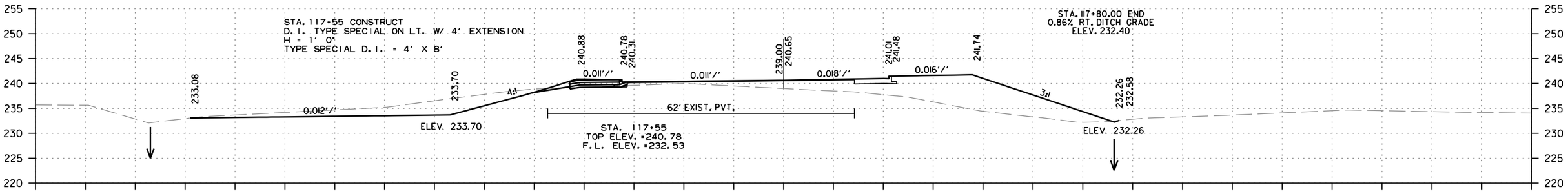

STAGE 1
CUT AREA 1 SQ.FT.
FILL AREA 209 SQ.FT.

STAGE 2
CUT AREA 103 SQ.FT.
FILL AREA 17 SQ.FT.

STAGE 1
CUT VOLUME 3 CU.YD.
FILL VOLUME 631 CU.YD.

STAGE 2
CUT VOLUME 364 CU.YD.
FILL VOLUME 25 CU.YD.

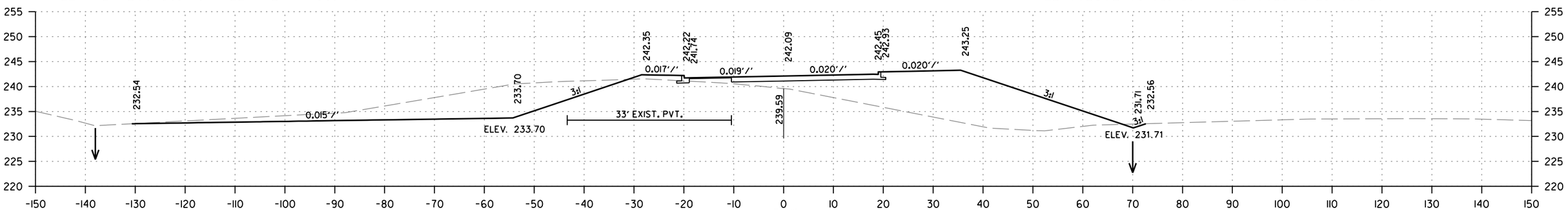

STAGE 1
CUT AREA 2 SQ.FT.
FILL AREA 411 SQ.FT.

STAGE 2
CUT AREA 254 SQ.FT.
FILL AREA 8 SQ.FT.

STAGE 1
CUT VOLUME 9 CU.YD.
FILL VOLUME 2320 CU.YD.

STAGE 2
CUT VOLUME 1276 CU.YD.
FILL VOLUME 15 CU.YD.

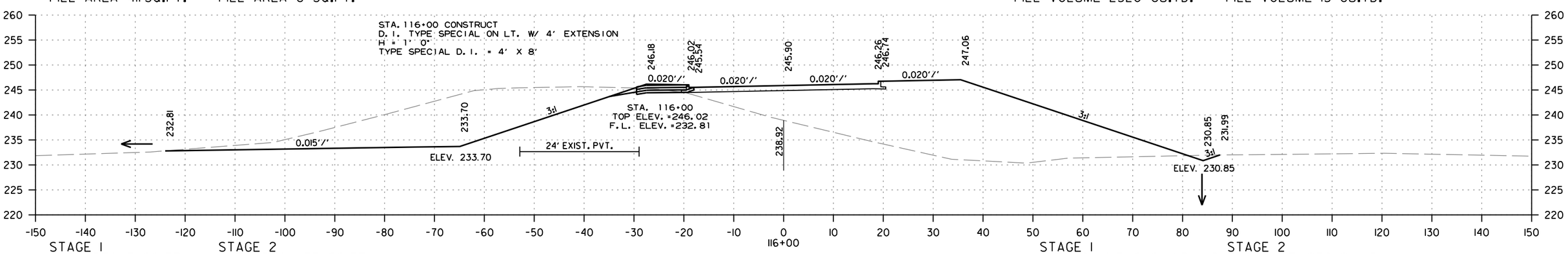

STAGE 1
CUT AREA 3 SQ.FT.
FILL AREA 842 SQ.FT.

STAGE 2
CUT AREA 435 SQ.FT.
FILL AREA 0 SQ.FT.

STAGE 1
CUT VOLUME 19 CU.YD.
FILL VOLUME 4146 CU.YD.

STAGE 2
CUT VOLUME 1978 CU.YD.
FILL VOLUME 0 CU.YD.

HWY. 31
STA. 116+00 TO STA. 117+55

WM41715 7/24/2023
R061613.DGN

DATE REVISED	DATE REVISED	FED.RD. DIST.NO.	STATE	JOB NO.	SHEET NO.	TOTAL SHEETS
		6	ARK.	061613	178	215
		CROSS SECTIONS				

STA. 118+45.00 END
0.00% LT. DITCH GRADE
ELEV. 233.00

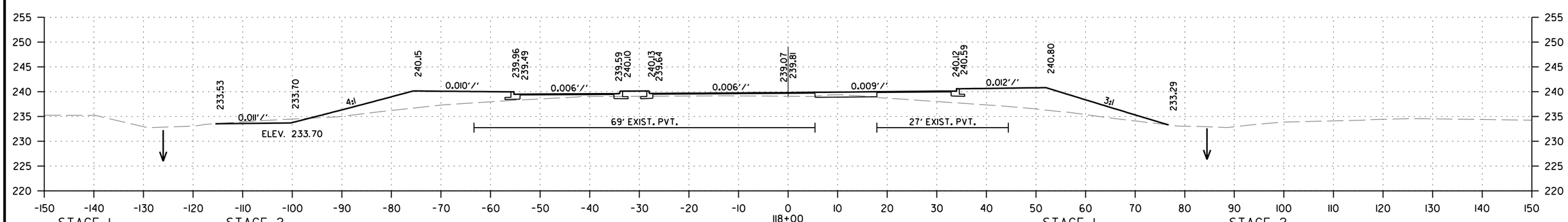

STAGE 1
CUT AREA 4 SQ.FT.
FILL AREA 0 SQ.FT.

STAGE 2
CUT AREA 10 SQ.FT.
FILL AREA 207 SQ.FT.

STAGE 1
CUT VOLUME 4 CU.YD.
FILL VOLUME 174 CU.YD.

STAGE 2
CUT VOLUME 94 CU.YD.
FILL VOLUME 187 CU.YD.

HWY. 31
STA. 118+00 TO STA. 118+00

MM41715 7/24/2023
R06161 3.DGN

DATE REVISED	DATE REVISED	FED.RD. DIST.NO.	STATE	JOB NO.	SHEET NO.	TOTAL SHEETS
		6	ARK.	061613	179	215
		CROSS SECTIONS				

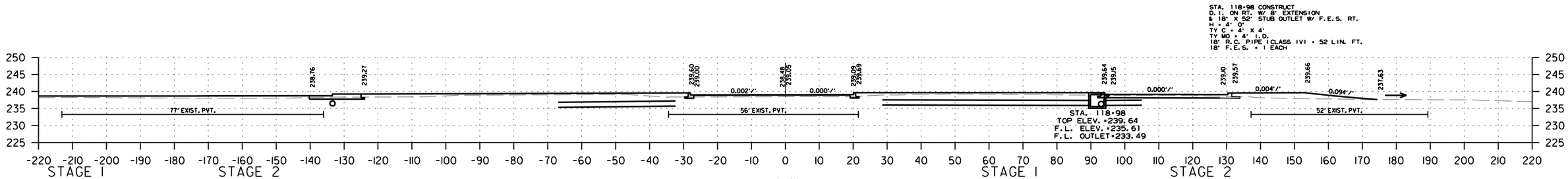

STAGE 1
CUT AREA 26 SQ.FT.
FILL AREA 46 SQ.FT.

STAGE 2
CUT AREA 13 SQ.FT.
FILL AREA 48 SQ.FT.

118+98

STAGE 1
CUT VOLUME 5 CU.YD.
FILL VOLUME 9 CU.YD.

STAGE 2
CUT VOLUME 3 CU.YD.
FILL VOLUME 12 CU.YD.

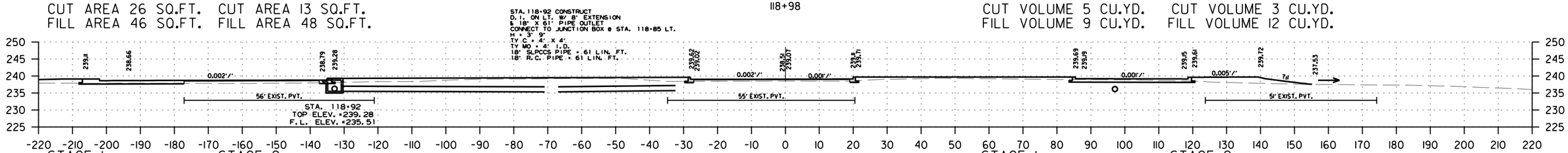

STAGE 1
CUT AREA 22 SQ.FT.
FILL AREA 36 SQ.FT.

STAGE 2
CUT AREA 12 SQ.FT.
FILL AREA 57 SQ.FT.

118+92

STAGE 1
CUT VOLUME 5 CU.YD.
FILL VOLUME 9 CU.YD.

STAGE 2
CUT VOLUME 2 CU.YD.
FILL VOLUME 28 CU.YD.

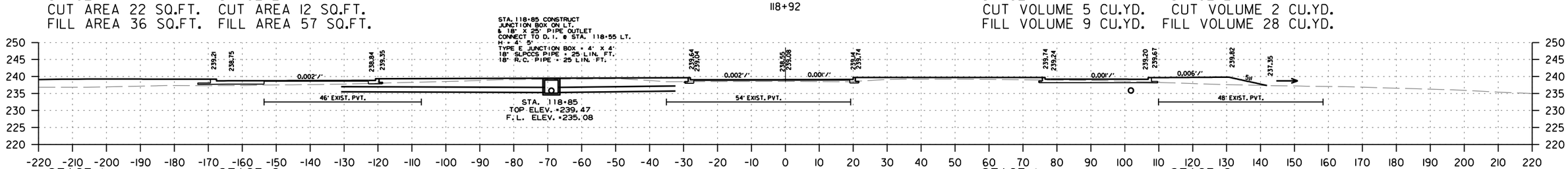

STAGE 1
CUT AREA 20 SQ.FT.
FILL AREA 35 SQ.FT.

STAGE 2
CUT AREA 1 SQ.FT.
FILL AREA 161 SQ.FT.

118+85

STAGE 1
CUT VOLUME 18 CU.YD.
FILL VOLUME 29 CU.YD.

STAGE 2
CUT VOLUME 1 CU.YD.
FILL VOLUME 268 CU.YD.

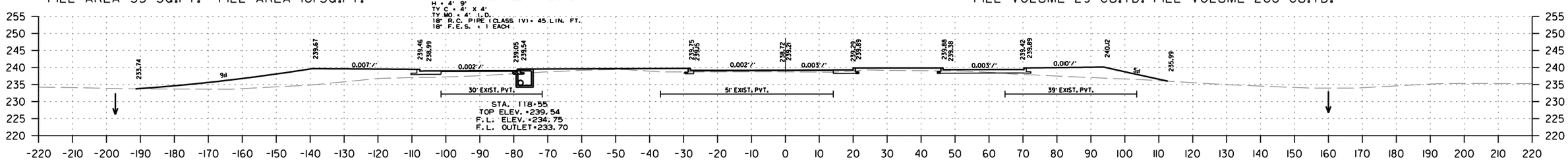

STAGE 1
CUT AREA 13 SQ.FT.
FILL AREA 18 SQ.FT.

STAGE 2
CUT AREA 1 SQ.FT.
FILL AREA 322 SQ.FT.

118+55

STAGE 1
CUT VOLUME 17 CU.YD.
FILL VOLUME 18 CU.YD.

STAGE 2
CUT VOLUME 11 CU.YD.
FILL VOLUME 539 CU.YD.

HWY. 31
STA. 118+55 TO STA. 118+98

WM41715 7/24/2023
R061613.DGN

DATE REVISED	DATE REVISED	FED.RD. DIST.NO.	STATE	JOB NO.	SHEET NO.	TOTAL SHEETS
		6	ARK.	061613	180	215
		CROSS SECTIONS				

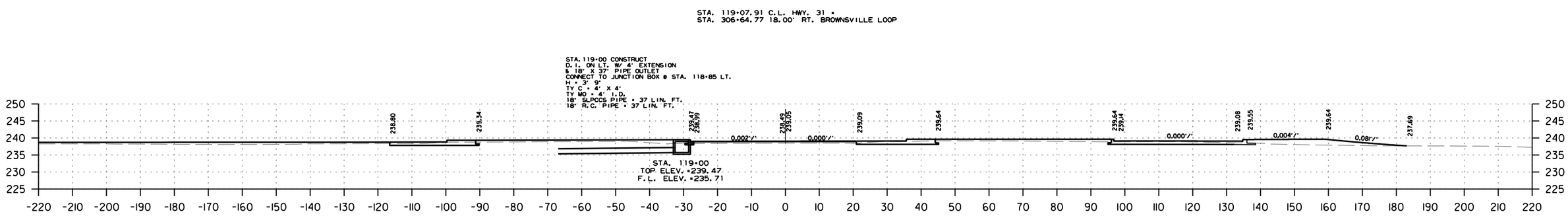

STAGE 1
CUT AREA 46 SQ.FT.
FILL AREA 30 SQ.FT.

STAGE 2
CUT AREA 23 SQ.FT.
FILL AREA 53 SQ.FT.

STAGE 1
CUT VOLUME 3 CU.YD.
FILL VOLUME 3 CU.YD.

STAGE 2
CUT VOLUME 1 CU.YD.
FILL VOLUME 4 CU.YD.

HWY. 31
STA. 119+00 TO STA. 119+00

MM41715 7/24/2023
R06161 3.DGN

DATE REVISED	DATE REVISED	FED.RD. DIST.NO.	STATE	JOB NO.	SHEET NO.	TOTAL SHEETS
		6	ARK.	061613	181	215
		CROSS SECTIONS				

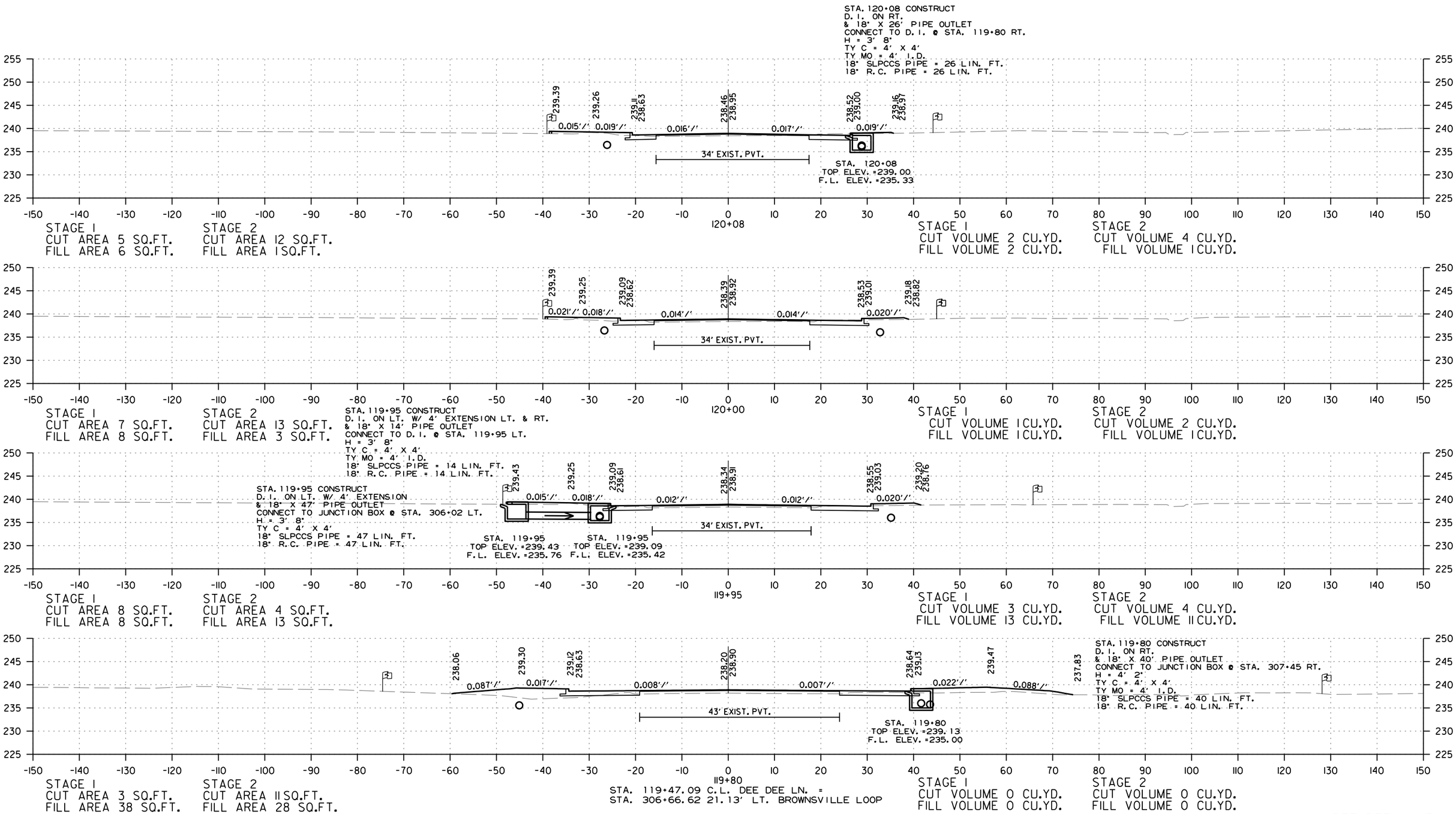

DEE DEE LANE
STA. 119+80 TO STA. 120+08

MM41715 7/24/2023
R061613.DGN

DATE REVISED	DATE REVISED	FED.RD. DIST.NO.	STATE	JOB NO.	SHEET NO.	TOTAL SHEETS
		6	ARK.	061613	182	215
		CROSS SECTIONS				

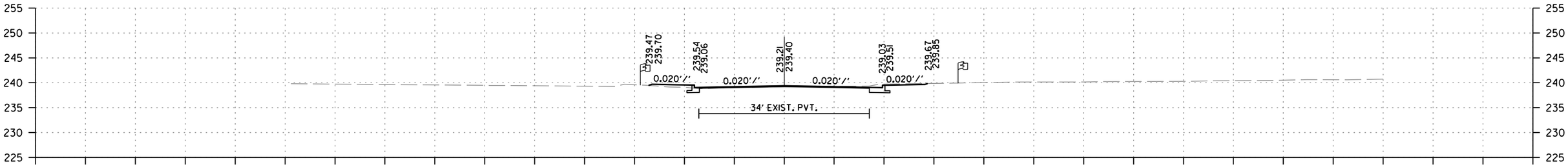

STAGE 1
CUT AREA 2 SQ.FT.
FILL AREA 4 SQ.FT.

STAGE 2
CUT AREA 7 SQ.FT.
FILL AREA 0 SQ.FT.

STAGE 1
CUT VOLUME 1 CU.YD.
FILL VOLUME 2 CU.YD.

STAGE 2
CUT VOLUME 4 CU.YD.
FILL VOLUME 0 CU.YD.

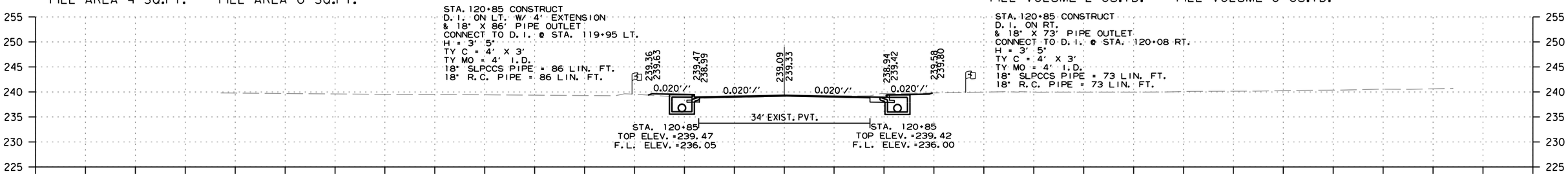

STAGE 1
CUT AREA 2 SQ.FT.
FILL AREA 4 SQ.FT.

STAGE 2
CUT AREA 9 SQ.FT.
FILL AREA 0 SQ.FT.

STAGE 1
CUT VOLUME 3 CU.YD.
FILL VOLUME 6 CU.YD.

STAGE 2
CUT VOLUME 11 CU.YD.
FILL VOLUME 1 CU.YD.

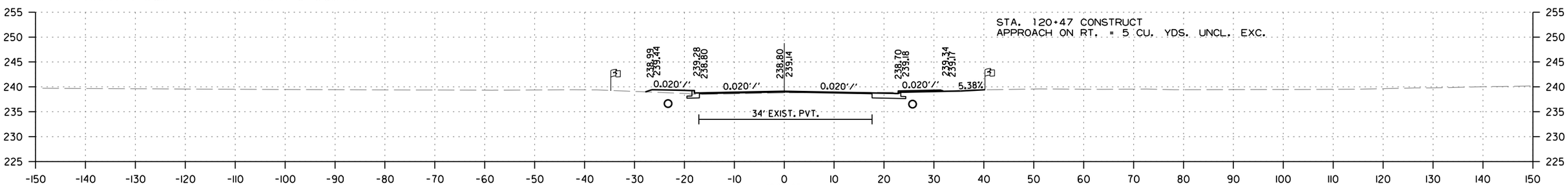

STAGE 1
CUT AREA 2 SQ.FT.
FILL AREA 5 SQ.FT.

STAGE 2
CUT AREA 7 SQ.FT.
FILL AREA 2 SQ.FT.

STAGE 1
CUT VOLUME 0 CU.YD.
FILL VOLUME 1 CU.YD.

STAGE 2
CUT VOLUME 2 CU.YD.
FILL VOLUME 0 CU.YD.

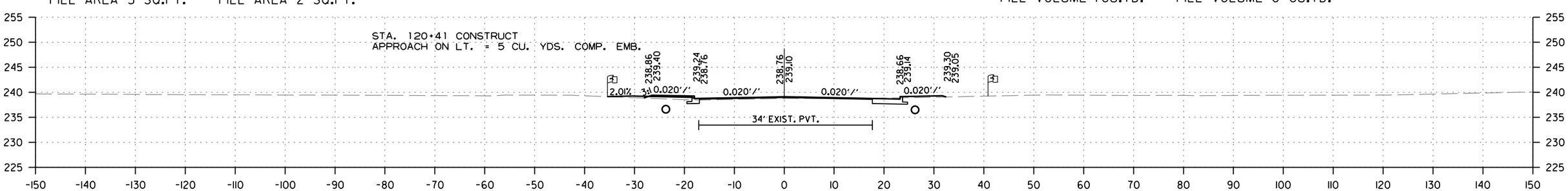

STAGE 1
CUT AREA 2 SQ.FT.
FILL AREA 6 SQ.FT.

STAGE 2
CUT AREA 7 SQ.FT.
FILL AREA 2 SQ.FT.

STAGE 1
CUT VOLUME 4 CU.YD.
FILL VOLUME 7 CU.YD.

STAGE 2
CUT VOLUME 12 CU.YD.
FILL VOLUME 2 CU.YD.

DEE DEE LANE
STA. 120+41 TO STA. 121+00

MM41715 7/24/2023
R061613.DGN

DATE REVISED	DATE REVISED	FED.RD. DIST.NO.	STATE	JOB NO.	SHEET NO.	TOTAL SHEETS
		6	ARK.	061613	183	215
		CROSS SECTIONS				

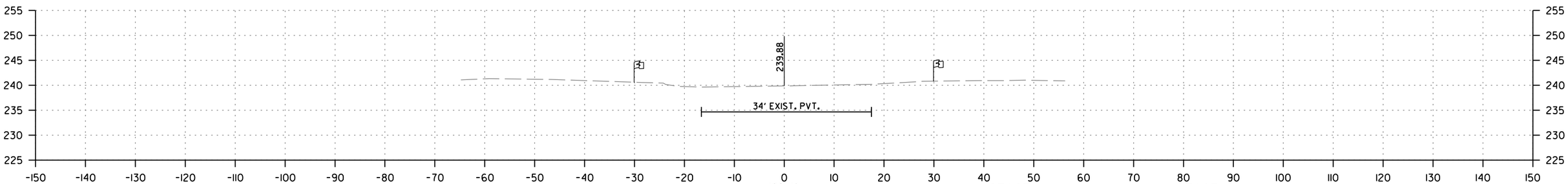

STAGE 1
CUT AREA 0 SQ.FT.
FILL AREA 0 SQ.FT.

STAGE 2
CUT AREA 0 SQ.FT.
FILL AREA 0 SQ.FT.

122+18
END 100' TRANSITION

STAGE 1
CUT VOLUME 0 CU.YD.
FILL VOLUME 0 CU.YD.

STAGE 2
CUT VOLUME 0 CU.YD.
FILL VOLUME 0 CU.YD.

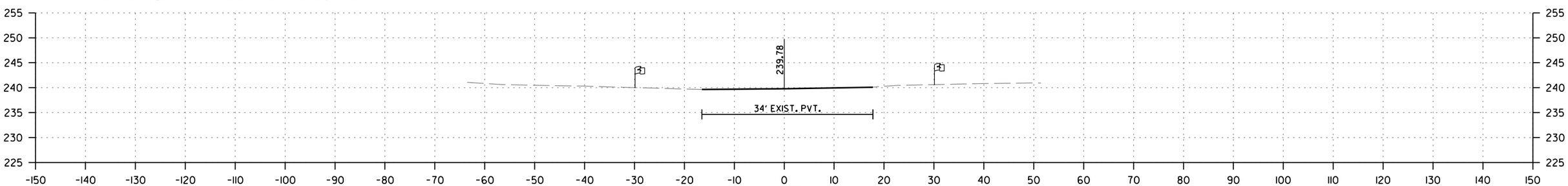

STAGE 1
CUT AREA 0 SQ.FT.
FILL AREA 0 SQ.FT.

STAGE 2
CUT AREA 0 SQ.FT.
FILL AREA 0 SQ.FT.

122+00

STAGE 1
CUT VOLUME 0 CU.YD.
FILL VOLUME 0 CU.YD.

STAGE 2
CUT VOLUME 0 CU.YD.
FILL VOLUME 0 CU.YD.

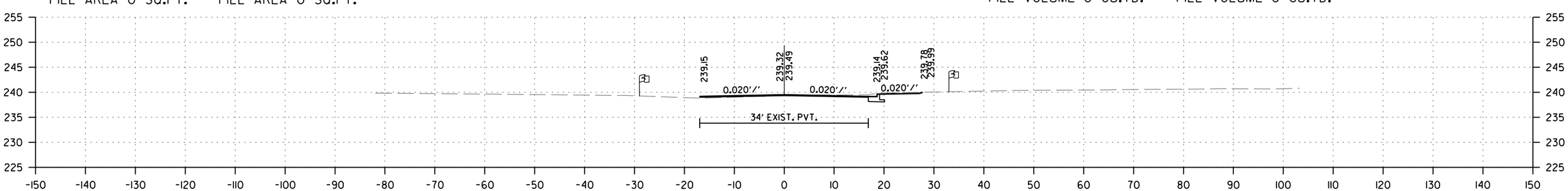

STAGE 1
CUT AREA 0 SQ.FT.
FILL AREA 0 SQ.FT.

STAGE 2
CUT AREA 6 SQ.FT.
FILL AREA 0 SQ.FT.

121+18
END SITE 1
END 90' TAPER
BEGIN 100' TRANSITION

STAGE 1
CUT VOLUME 1 CU.YD.
FILL VOLUME 1 CU.YD.

STAGE 2
CUT VOLUME 4 CU.YD.
FILL VOLUME 0 CU.YD.

DEE DEE LANE
STA. 121+18 TO STA. 122+18

MM41715 7/24/2023
R061613.DGN

DATE REVISED	DATE REVISED	FED.RD. DIST.NO.	STATE	JOB NO.	SHEET NO.	TOTAL SHEETS
		6	ARK.	061613	184	215
		CROSS SECTIONS				

STA. 303+35 CONSTRUCT
D. I. ON LT.
& 36" X 5' STUB INLET W/ F.E.S. LT.
& 36" X 85' PIPE OUTLET
CONNECT TO D. I. @ STA. 304+25 LT.
H = 4' 4"
TY C = 4' X 4'
TY MO = 5' I.D.
36" R.C. PIPE = 90 LIN.FT.
36" SLPCCS PIPE = 85 LIN.FT.
36" F.E.S. = 1 EACH

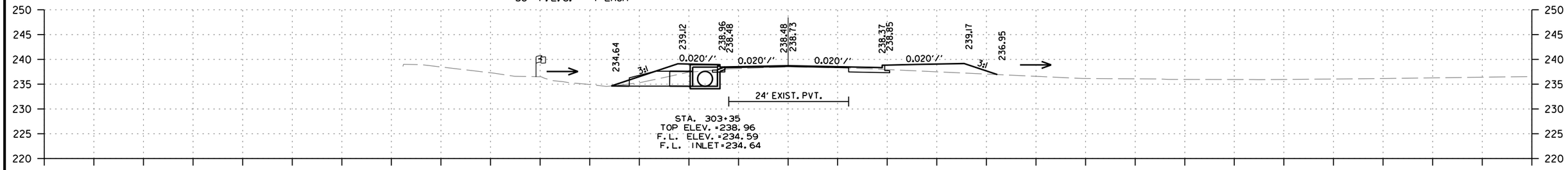

STAGE 1
CUT AREA 1 SQ.FT.
FILL AREA 29 SQ.FT.

STAGE 2
CUT AREA 6 SQ.FT.
FILL AREA 29 SQ.FT.

STAGE 1
CUT VOLUME 1 CU.YD.
FILL VOLUME 16 CU.YD.

STAGE 2
CUT VOLUME 4 CU.YD.
FILL VOLUME 21 CU.YD.

STA. 303+15 CONSTRUCT
D. I. TYPE SPECIAL ON RT. W/ 4' EXTENSION
H = 1' 0"
TYPE SPECIAL D. I. = 4' X 16'

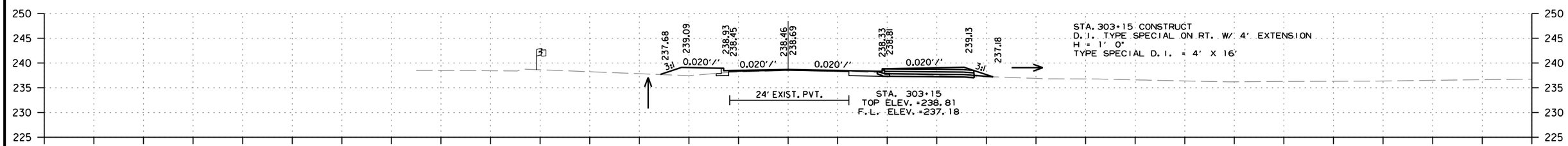

STAGE 1
CUT AREA 1 SQ.FT.
FILL AREA 14 SQ.FT.

STAGE 2
CUT AREA 6 SQ.FT.
FILL AREA 28 SQ.FT.

STAGE 1
CUT VOLUME 0 CU.YD.
FILL VOLUME 4 CU.YD.

STAGE 2
CUT VOLUME 4 CU.YD.
FILL VOLUME 13 CU.YD.

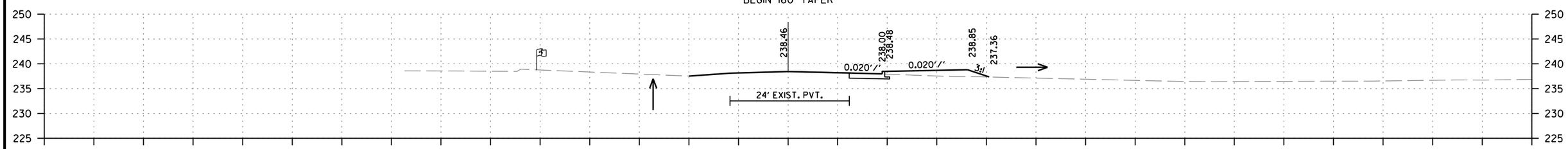

STAGE 1
CUT AREA 0 SQ.FT.
FILL AREA 0 SQ.FT.

STAGE 2
CUT AREA 8 SQ.FT.
FILL AREA 20 SQ.FT.

STAGE 1
CUT VOLUME 0 CU.YD.
FILL VOLUME 0 CU.YD.

STAGE 2
CUT VOLUME 13 CU.YD.
FILL VOLUME 31 CU.YD.

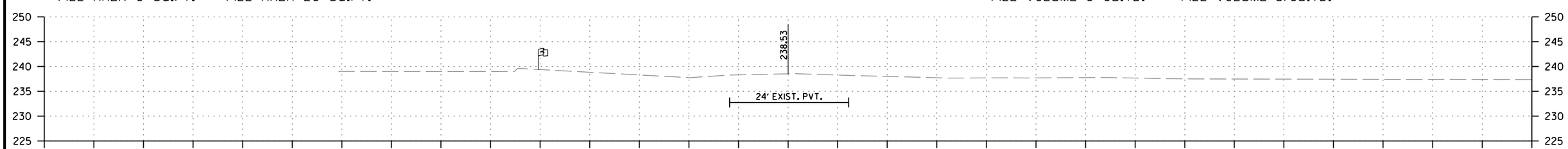

STAGE 1
CUT AREA 0 SQ.FT.
FILL AREA 0 SQ.FT.

STAGE 2
CUT AREA 0 SQ.FT.
FILL AREA 0 SQ.FT.

STAGE 1
CUT VOLUME 0 CU.YD.
FILL VOLUME 0 CU.YD.

STAGE 2
CUT VOLUME 0 CU.YD.
FILL VOLUME 0 CU.YD.

BROWNSVILLE LOOP/HWY. 31
STA. 302+15 TO STA. 303+35

MM41715 7/24/2023
R061613.DGN

DATE REVISED	DATE REVISED	FED.RD. DIST.NO.	STATE	JOB NO.	SHEET NO.	TOTAL SHEETS
		6	ARK.	061613	185	215
		CROSS SECTIONS				

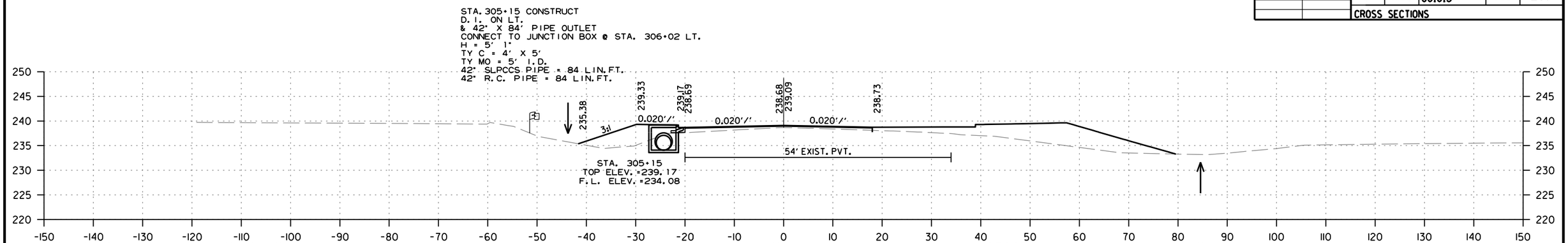

STAGE 1
CUT AREA 0 SQ.FT.
FILL AREA 51 SQ.FT.

STAGE 2
CUT AREA 0 SQ.FT.
FILL AREA 0 SQ.FT.

STAGE 1
CUT VOLUME 0 CU.YD.
FILL VOLUME 28 CU.YD.

STAGE 2
CUT VOLUME 0 CU.YD.
FILL VOLUME 0 CU.YD.

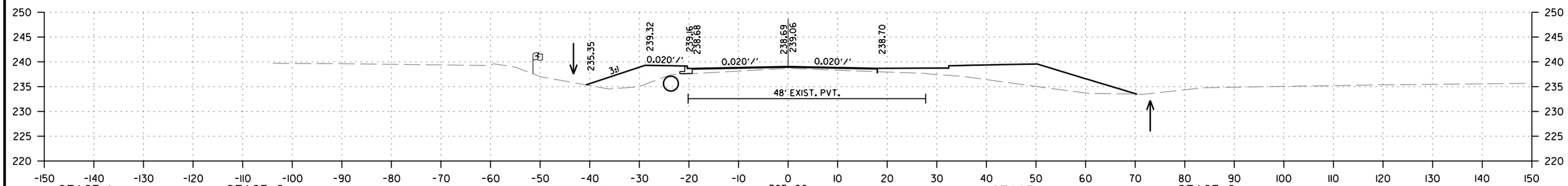

STAGE 1
CUT AREA 0 SQ.FT.
FILL AREA 48 SQ.FT.

STAGE 2
CUT AREA 0 SQ.FT.
FILL AREA 0 SQ.FT.

STAGE 1
CUT VOLUME 0 CU.YD.
FILL VOLUME 122 CU.YD.

STAGE 2
CUT VOLUME 4 CU.YD.
FILL VOLUME 106 CU.YD.

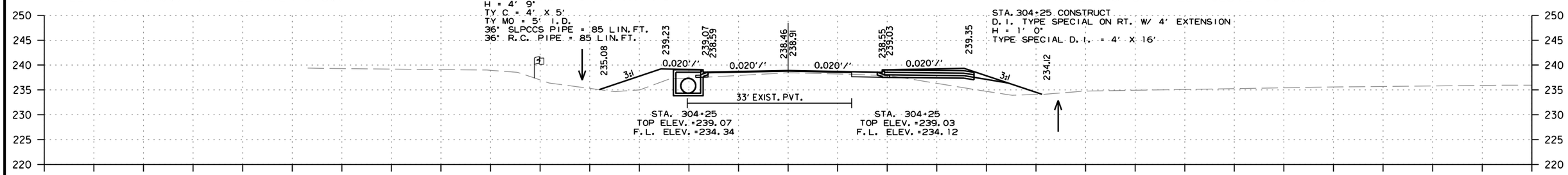

STAGE 1
CUT AREA 0 SQ.FT.
FILL AREA 40 SQ.FT.

STAGE 2
CUT AREA 3 SQ.FT.
FILL AREA 76 SQ.FT.

STAGE 1
CUT VOLUME 0 CU.YD.
FILL VOLUME 35 CU.YD.

STAGE 2
CUT VOLUME 3 CU.YD.
FILL VOLUME 68 CU.YD.

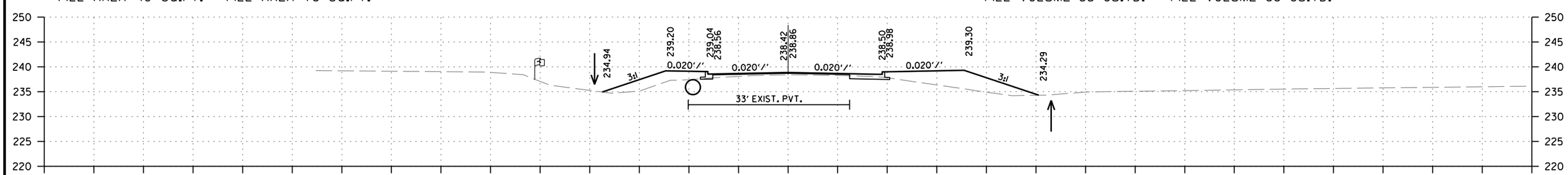

STAGE 1
CUT AREA 1 SQ.FT.
FILL AREA 35 SQ.FT.

STAGE 2
CUT AREA 4 SQ.FT.
FILL AREA 71 SQ.FT.

STAGE 1
CUT VOLUME 2 CU.YD.
FILL VOLUME 77 CU.YD.

STAGE 2
CUT VOLUME 12 CU.YD.
FILL VOLUME 120 CU.YD.

BROWNSVILLE LOOP/HWY. 31
STA. 304+00 TO STA. 305+15

MM41715 7/24/2023
R061613.DGN

DATE REVISED	DATE REVISED	FED.RD. DIST.NO.	STATE	JOB NO.	SHEET NO.	TOTAL SHEETS
		6	ARK.	061613	186	215
		CROSS SECTIONS				

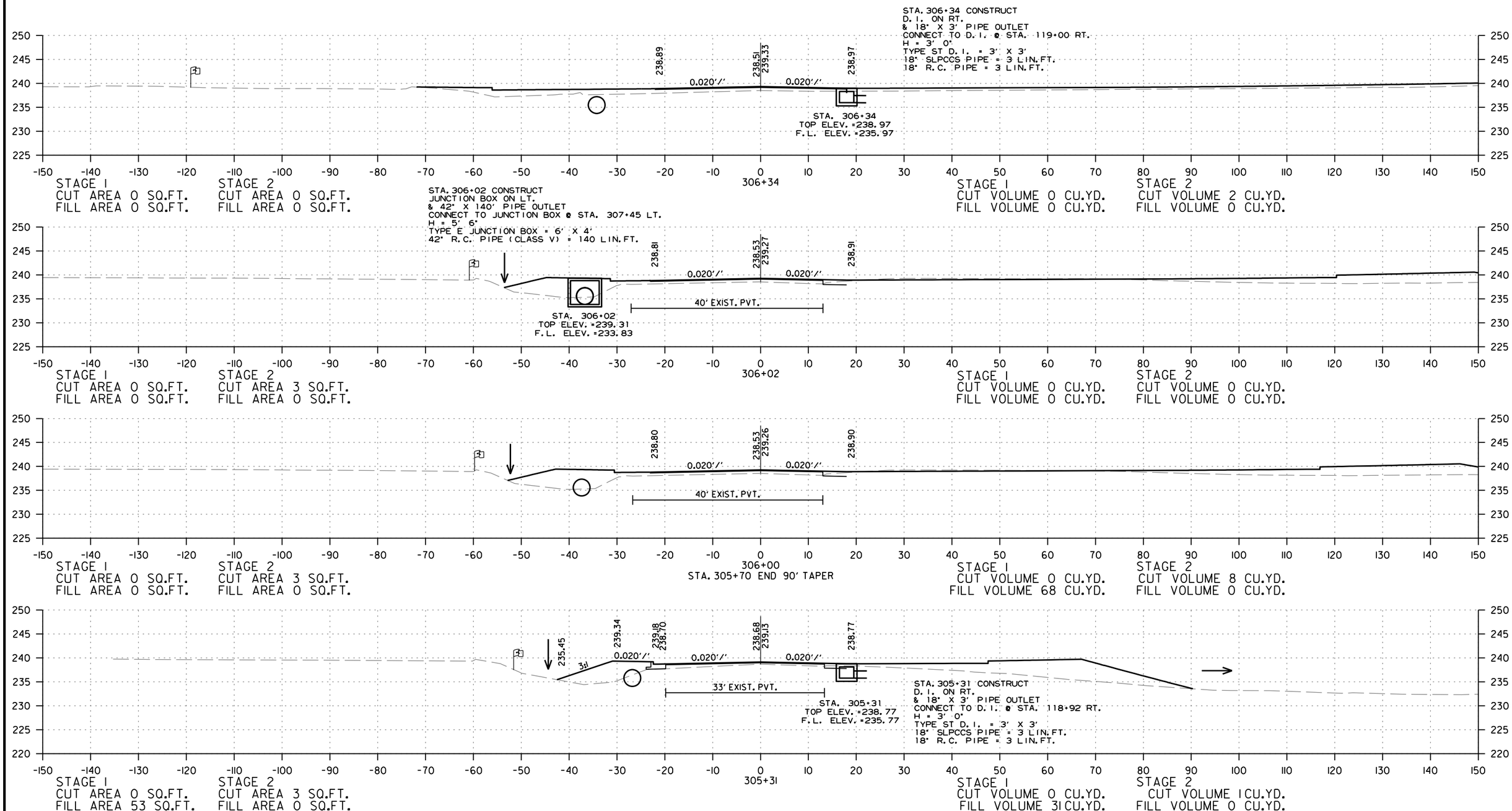

BROWNSVILLE LOOP/HWY. 31
STA. 305+31 TO STA. 306+34

MM41715 7/24/2023
R06161 3.DGN

DATE REVISED	DATE REVISED	FED.RD. DIST.NO.	STATE	JOB NO.	SHEET NO.	TOTAL SHEETS
		6	ARK.	061613	187	215
		CROSS SECTIONS				

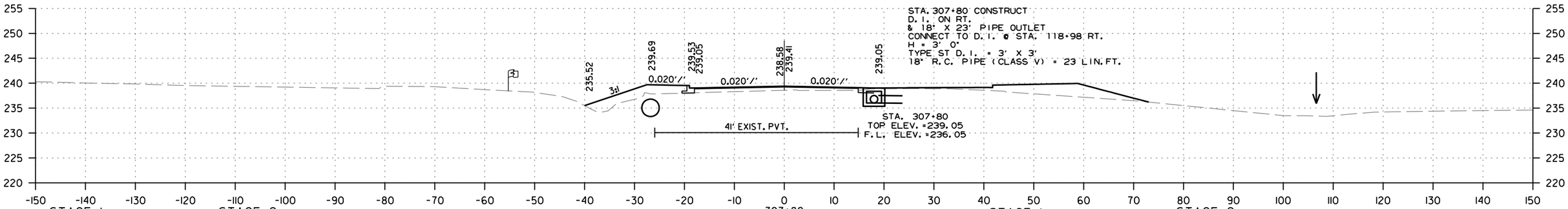

STAGE 1
CUT AREA 2 SQ.FT.
FILL AREA 0 SQ.FT.

STAGE 2
CUT AREA 0 SQ.FT.
FILL AREA 37 SQ.FT.

STAGE 1
CUT VOLUME 3 CU.YD.
FILL VOLUME 0 CU.YD.

STAGE 2
CUT VOLUME 0 CU.YD.
FILL VOLUME 24 CU.YD.

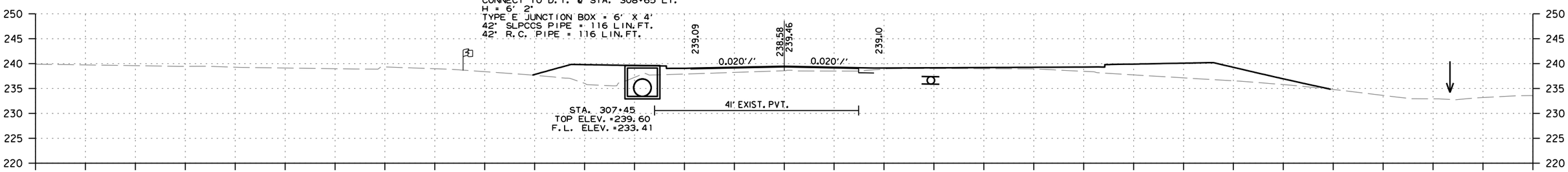

STAGE 1
CUT AREA 2 SQ.FT.
FILL AREA 0 SQ.FT.

STAGE 2
CUT AREA 0 SQ.FT.
FILL AREA 0 SQ.FT.

STAGE 1
CUT VOLUME 3 CU.YD.
FILL VOLUME 0 CU.YD.

STAGE 2
CUT VOLUME 0 CU.YD.
FILL VOLUME 0 CU.YD.

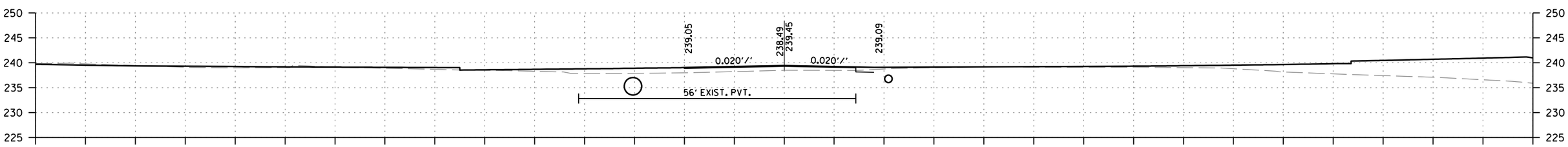

STAGE 1
CUT AREA 2 SQ.FT.
FILL AREA 0 SQ.FT.

STAGE 2
CUT AREA 0 SQ.FT.
FILL AREA 0 SQ.FT.

STAGE 1
CUT VOLUME 1 CU.YD.
FILL VOLUME 0 CU.YD.

STAGE 2
CUT VOLUME 0 CU.YD.
FILL VOLUME 0 CU.YD.

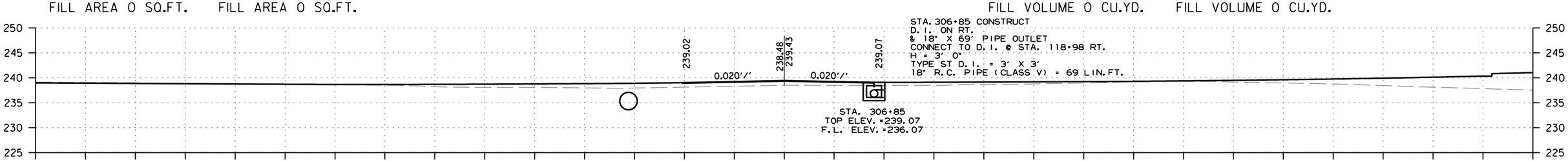

STAGE 1
CUT AREA 0 SQ.FT.
FILL AREA 0 SQ.FT.

STAGE 2
CUT AREA 0 SQ.FT.
FILL AREA 0 SQ.FT.

STAGE 1
CUT VOLUME 0 CU.YD.
FILL VOLUME 0 CU.YD.

STAGE 2
CUT VOLUME 0 CU.YD.
FILL VOLUME 0 CU.YD.

BROWNSVILLE LOOP/HWY. 31
STA. 306+85 TO STA. 307+80

DATE REVISED	DATE REVISED	FED.RD. DIST.NO.	STATE	JOB NO.	SHEET NO.	TOTAL SHEETS
		6	ARK.	061613	188	215
		CROSS SECTIONS				

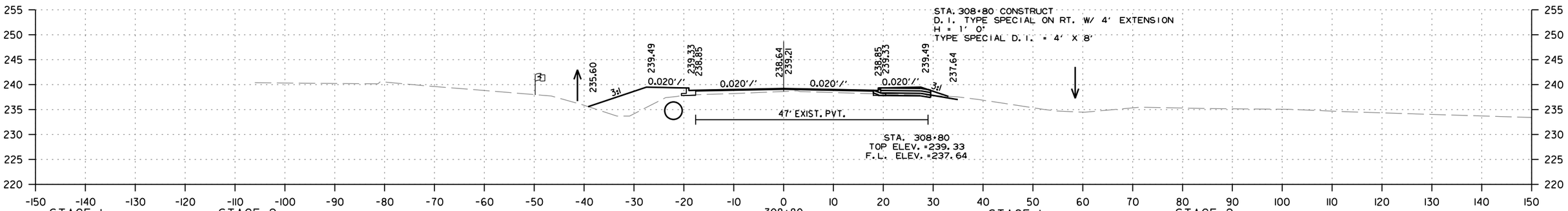

STAGE 1
CUT AREA 0 SQ.FT.
FILL AREA 0 SQ.FT.

STAGE 2
CUT AREA 2 SQ.FT.
FILL AREA 70 SQ.FT.

STAGE 1
CUT VOLUME 0 CU.YD.
FILL VOLUME 0 CU.YD.

STAGE 2
CUT VOLUME 1 CU.YD.
FILL VOLUME 34 CU.YD.

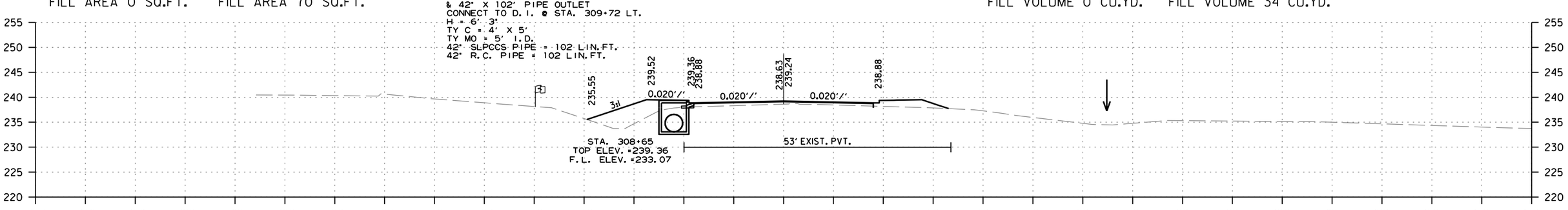

STAGE 1
CUT AREA 0 SQ.FT.
FILL AREA 0 SQ.FT.

STAGE 2
CUT AREA 1 SQ.FT.
FILL AREA 52 SQ.FT.

STAGE 1
CUT VOLUME 2 CU.YD.
FILL VOLUME 0 CU.YD.

STAGE 2
CUT VOLUME 2 CU.YD.
FILL VOLUME 105 CU.YD.

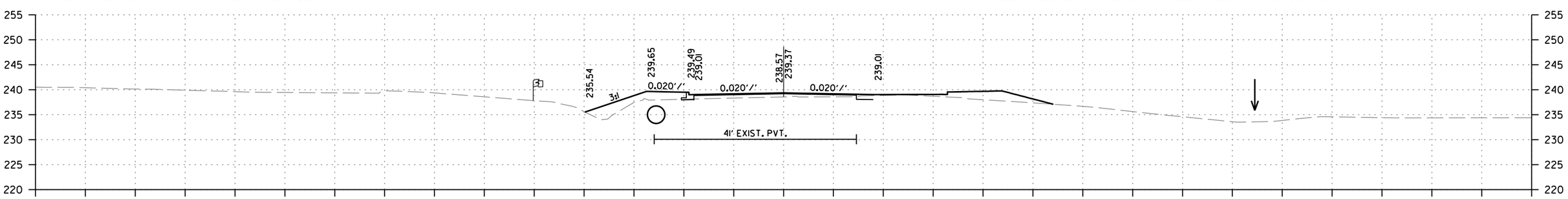

STAGE 1
CUT AREA 2 SQ.FT.
FILL AREA 0 SQ.FT.

STAGE 2
CUT AREA 1 SQ.FT.
FILL AREA 35 SQ.FT.

STAGE 1
CUT VOLUME 1 CU.YD.
FILL VOLUME 0 CU.YD.

STAGE 2
CUT VOLUME 0 CU.YD.
FILL VOLUME 27 CU.YD.

BROWNSVILLE LOOP/HWY. 31
STA. 308+00 TO STA. 308+80

MM41715 7/24/2023
R061613.DGN

DATE REVISED	DATE REVISED	FED.RD. DIST.NO.	STATE	JOB NO.	SHEET NO.	TOTAL SHEETS
		6	ARK.	061613	189	215
		CROSS SECTIONS				

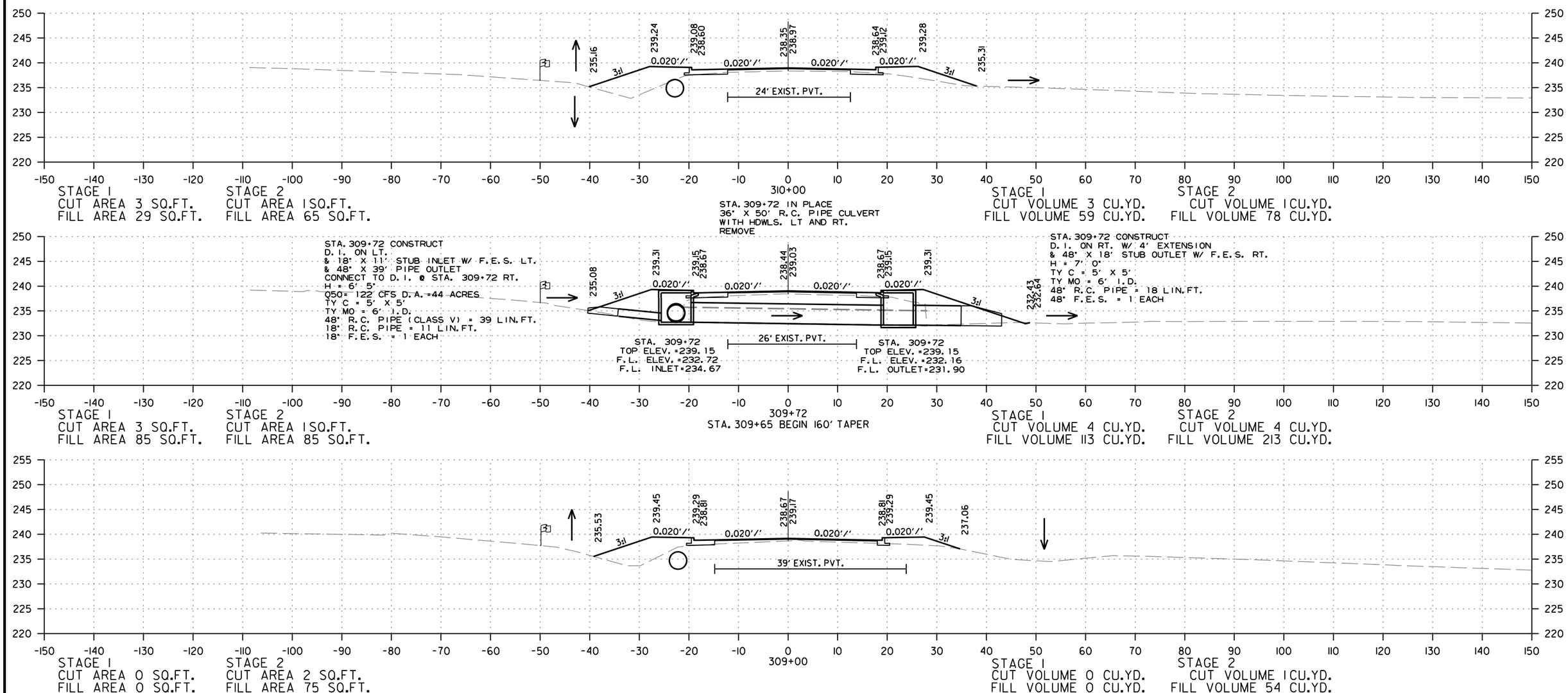

BROWNSVILLE LOOP/HWY. 31
STA. 309+00 TO STA. 310+00

MM41715 7/24/2023
R061613.DGN

DATE REVISED	DATE REVISED	FED.RD. DIST.NO.	STATE	JOB NO.	SHEET NO.	TOTAL SHEETS
		6	ARK.	061613	190	215
		CROSS SECTIONS				

STA. 311+55.00 END
-1.85% LT. DITCH GRADE
ELEV. = 234.01

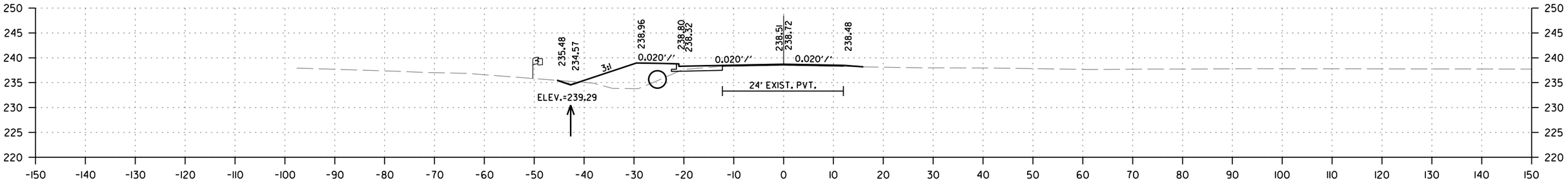

STAGE 1
CUT AREA 0 SQ.FT.
FILL AREA 0 SQ.FT.

STAGE 2
CUT AREA 6 SQ.FT.
FILL AREA 60 SQ.FT.

STA. 311+15 CONSTRUCT
D. I. ON LT.
& 42" X 32' STUB INLET W/ F.E.S. LT.
& 42" X 138' PIPE OUTLET
CONNECT TO D. I. @ STA. 309+72 LT.
H = 4' 11"
TY C = 4' X 5'
TY MO = 5' I.D.
42" R.C. PIPE = 170 LIN.FT.
42" SLPCCS PIPE = 138 LIN. FT.
42" F.E.S. = 1 EACH

311+25
END 160' TAPER
END HWY. 31
BEGIN 100' TRANSITION

STAGE 1
CUT VOLUME 0 CU.YD.
FILL VOLUME 0 CU.YD.

STAGE 2
CUT VOLUME 2 CU.YD.
FILL VOLUME 22 CU.YD.

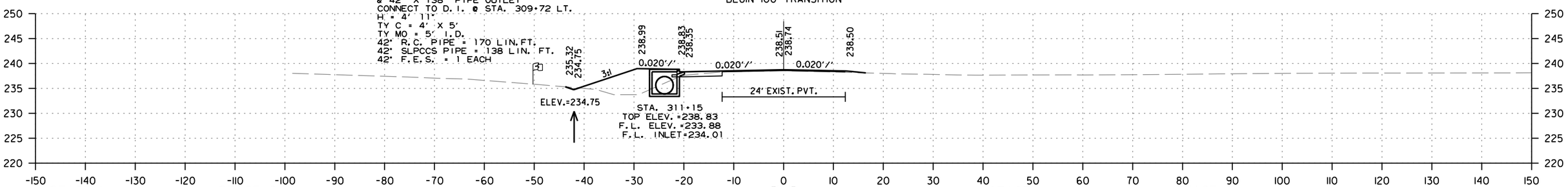

STAGE 1
CUT AREA 0 SQ.FT.
FILL AREA 0 SQ.FT.

STAGE 2
CUT AREA 5 SQ.FT.
FILL AREA 60 SQ.FT.

311+15

STAGE 1
CUT VOLUME 0 CU.YD.
FILL VOLUME 0 CU.YD.

STAGE 2
CUT VOLUME 3 CU.YD.
FILL VOLUME 34 CU.YD.

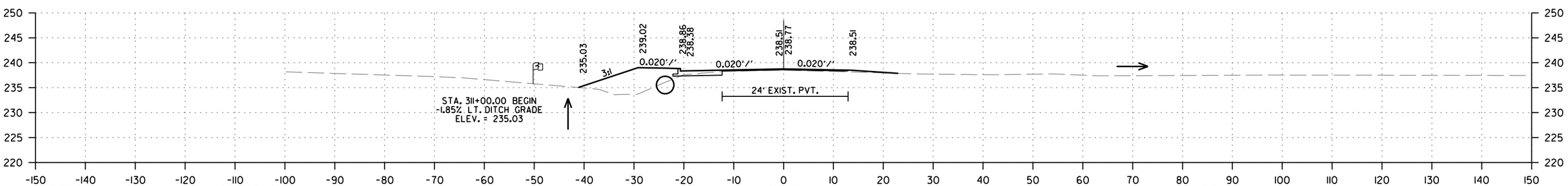

STAGE 1
CUT AREA 0 SQ.FT.
FILL AREA 0 SQ.FT.

STAGE 2
CUT AREA 4 SQ.FT.
FILL AREA 61 SQ.FT.

311+00

STAGE 1
CUT VOLUME 3 CU.YD.
FILL VOLUME 20 CU.YD.

STAGE 2
CUT VOLUME 7 CU.YD.
FILL VOLUME 140 CU.YD.

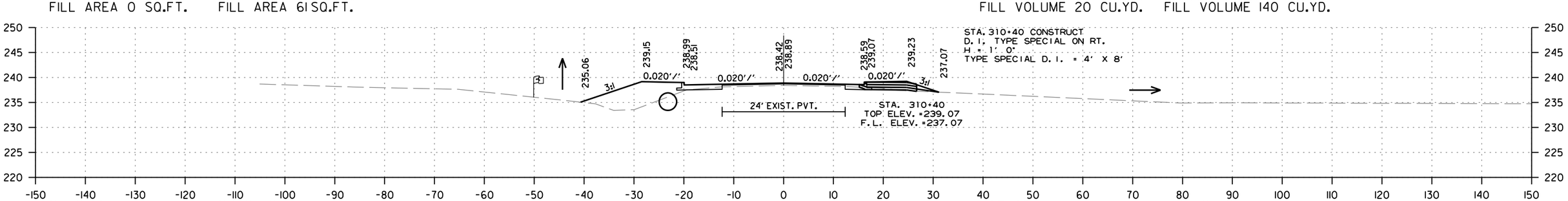

STAGE 1
CUT AREA 3 SQ.FT.
FILL AREA 18 SQ.FT.

STAGE 2
CUT AREA 2 SQ.FT.
FILL AREA 65 SQ.FT.

310+40

STAGE 1
CUT VOLUME 4 CU.YD.
FILL VOLUME 35 CU.YD.

STAGE 2
CUT VOLUME 2 CU.YD.
FILL VOLUME 96 CU.YD.

BROWNSVILLE LOOP/HWY. 31
STA. 310+40 TO STA. 311+25

MM41715 7/24/2023
R06161 3.DGN

DATE REVISED	DATE REVISED	FED.RD. DIST.NO.	STATE	JOB NO.	SHEET NO.	TOTAL SHEETS
		6	ARK.	061613	191	215
		CROSS SECTIONS				

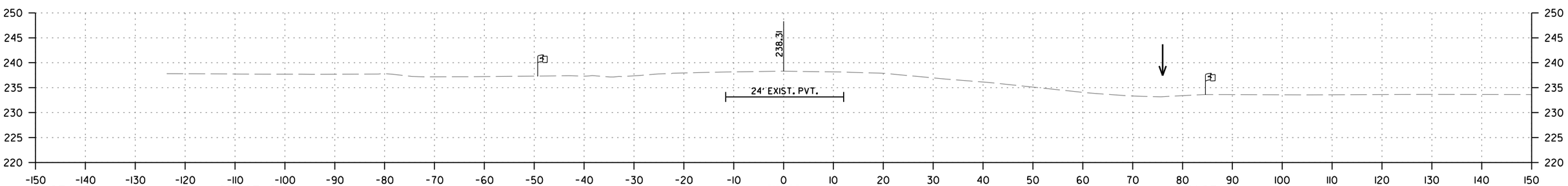

STAGE 1
CUT AREA 0 SQ.FT.
FILL AREA 0 SQ.FT.

STAGE 2
CUT AREA 0 SQ.FT.
FILL AREA 0 SQ.FT.

STAGE 1
CUT VOLUME 0 CU.YD.
FILL VOLUME 0 CU.YD.

STAGE 2
CUT VOLUME 0 CU.YD.
FILL VOLUME 0 CU.YD.

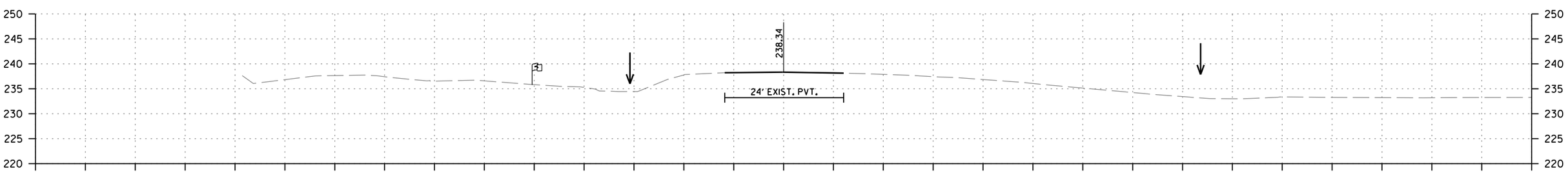

STAGE 1
CUT AREA 0 SQ.FT.
FILL AREA 0 SQ.FT.

STAGE 2
CUT AREA 0 SQ.FT.
FILL AREA 0 SQ.FT.

STAGE 1
CUT VOLUME 0 CU.YD.
FILL VOLUME 0 CU.YD.

STAGE 2
CUT VOLUME 8 CU.YD.
FILL VOLUME 83 CU.YD.

BROWNSVILLE LOOP/HWY. 31
STA. 312+00 TO STA. 312+25

MM41715 7/24/2023
R06161 3.DGN

DATE REVISED	DATE REVISED	FED.RD. DIST.NO.	STATE	JOB NO.	SHEET NO.	TOTAL SHEETS
		6	ARK.	061613	192	215
		CROSS SECTIONS				

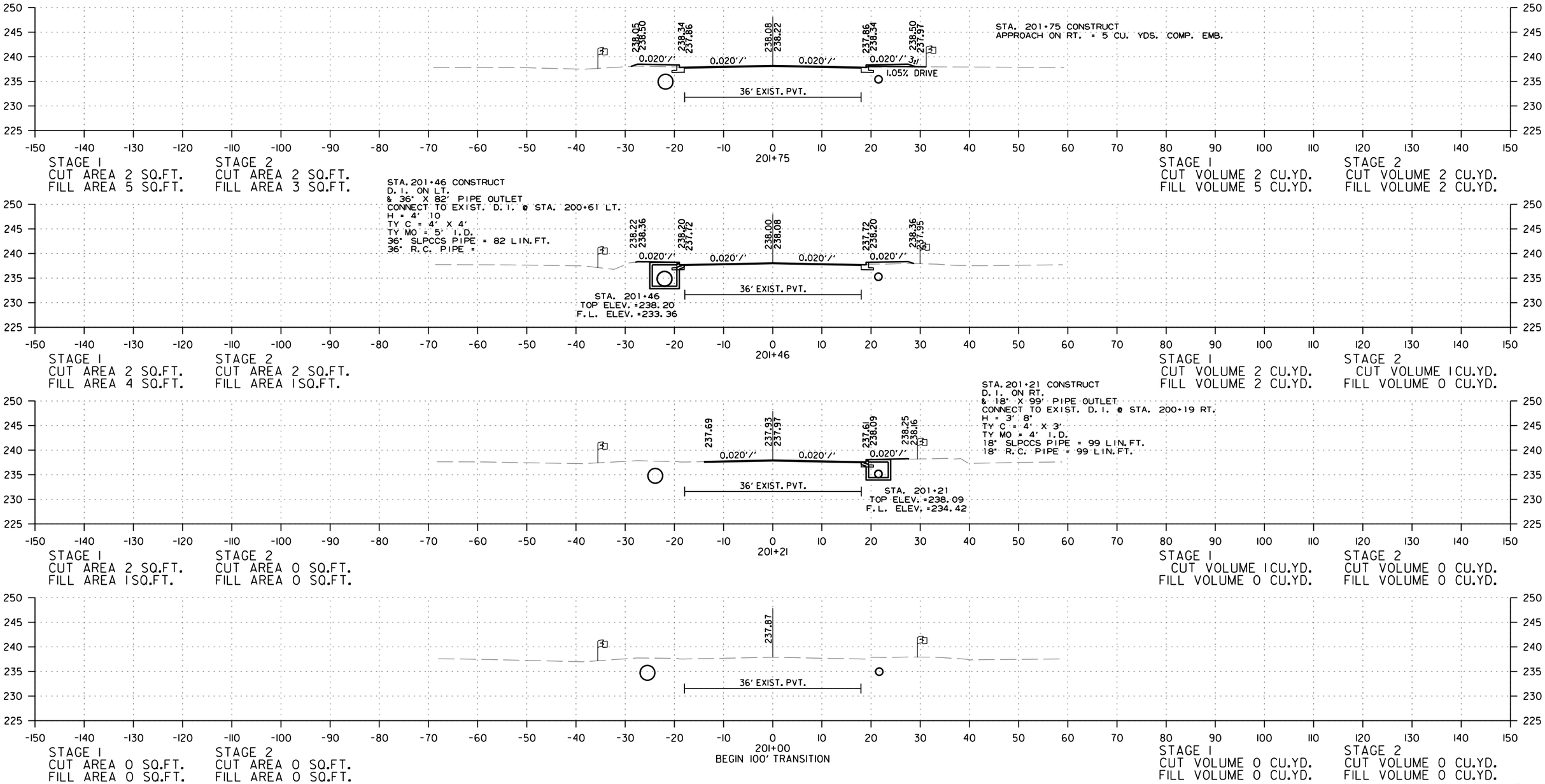

HWY. 13
STA. 201+00 TO STA. 201+75

MM41715 7/24/2023
R061613.DGN

DATE REVISED	DATE REVISED	FED.RD. DIST.NO.	STATE	JOB NO.	SHEET NO.	TOTAL SHEETS
		6	ARK.	061613	193	215
		CROSS SECTIONS				

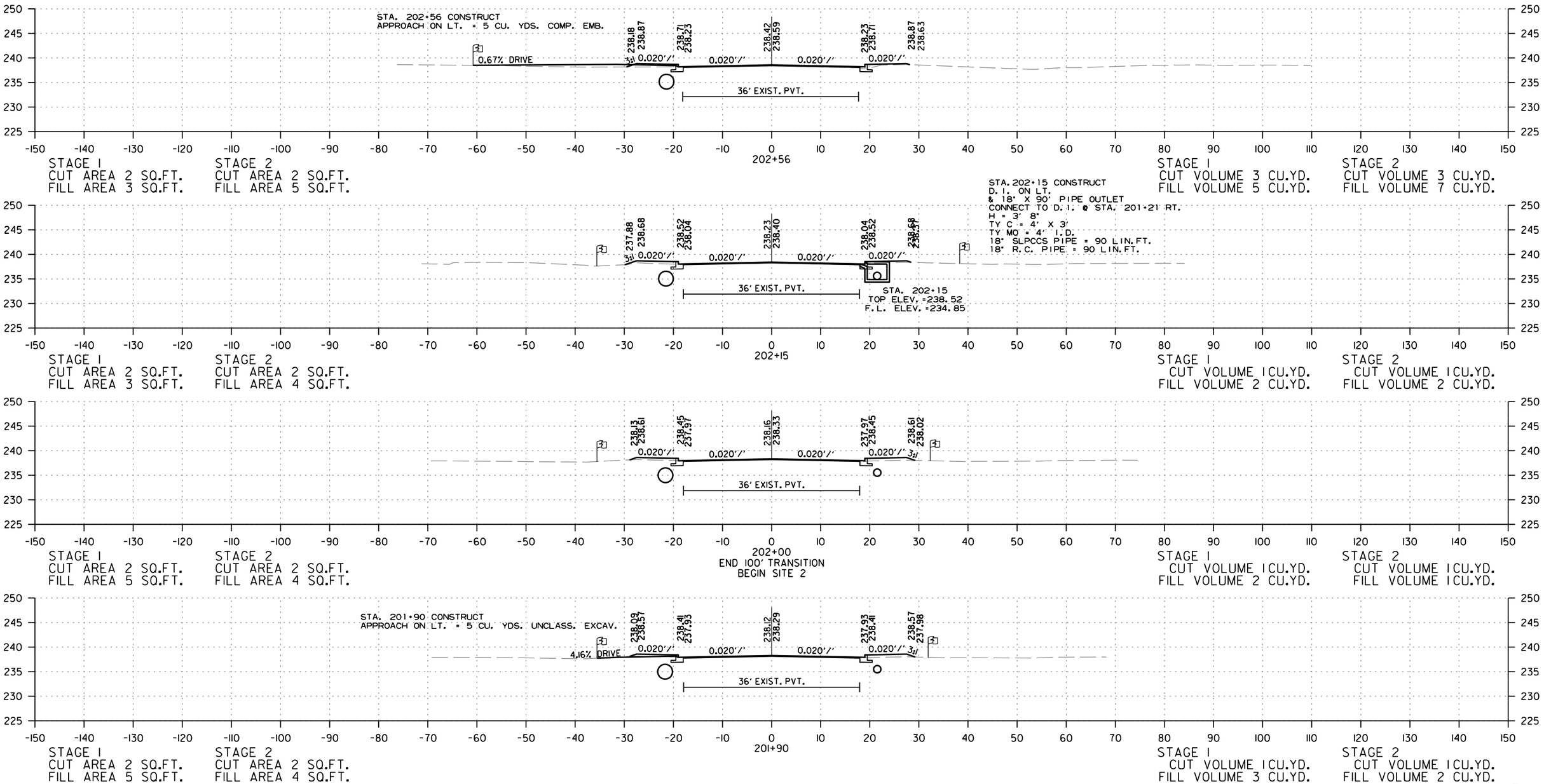

HWY. 13
STA. 201+90 TO STA. 202+56

MM41715 7/24/2023
R061613.DGN

DATE REVISED	DATE REVISED	FED.RD. DIST.NO.	STATE	JOB NO.	SHEET NO.	TOTAL SHEETS
		6	ARK.	061613	194	215
		CROSS SECTIONS				

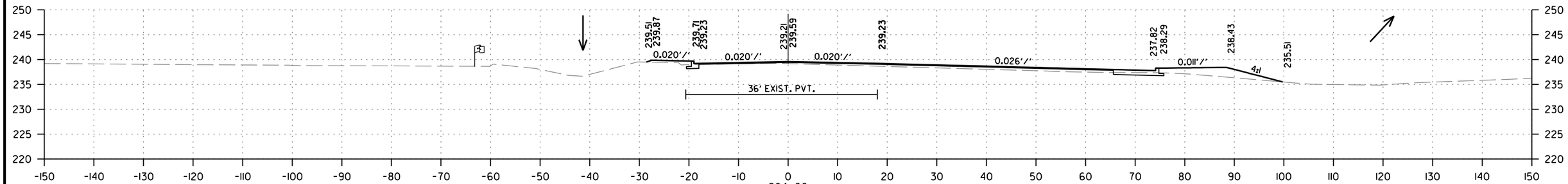

STAGE 1
CUT AREA 5 SQ.FT.
FILL AREA 30 SQ.FT.

STAGE 2
CUT AREA 2 SQ.FT.
FILL AREA 4 SQ.FT.

STAGE 1
CUT VOLUME 8 CU.YD.
FILL VOLUME 52 CU.YD.

STAGE 2
CUT VOLUME 3 CU.YD.
FILL VOLUME 7 CU.YD.

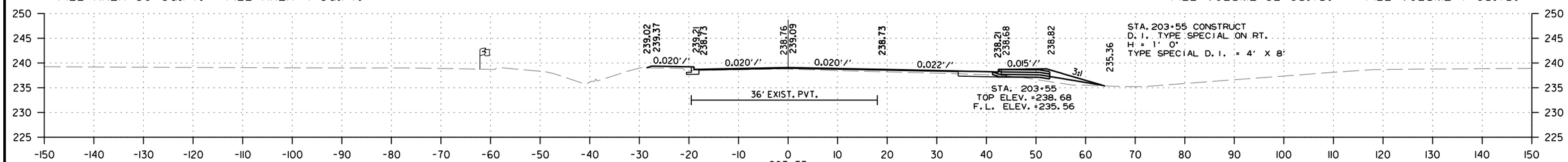

STAGE 1
CUT AREA 4 SQ.FT.
FILL AREA 32 SQ.FT.

STAGE 2
CUT AREA 2 SQ.FT.
FILL AREA 4 SQ.FT.

STAGE 1
CUT VOLUME 0 CU.YD.
FILL VOLUME 4 CU.YD.

STAGE 2
CUT VOLUME 0 CU.YD.
FILL VOLUME 0 CU.YD.

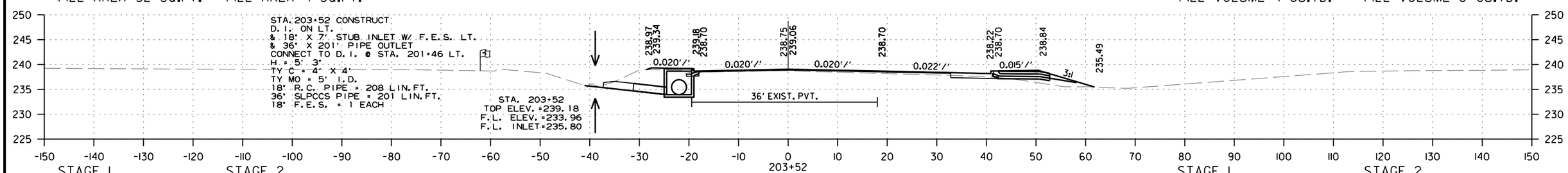

STAGE 1
CUT AREA 4 SQ.FT.
FILL AREA 32 SQ.FT.

STAGE 2
CUT AREA 2 SQ.FT.
FILL AREA 4 SQ.FT.

STAGE 1
CUT VOLUME 12 CU.YD.
FILL VOLUME 34 CU.YD.

STAGE 2
CUT VOLUME 4 CU.YD.
FILL VOLUME 7 CU.YD.

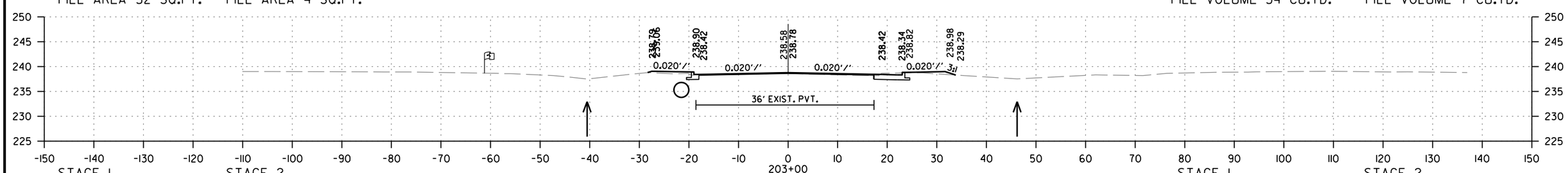

STAGE 1
CUT AREA 8 SQ.FT.
FILL AREA 3 SQ.FT.

STAGE 2
CUT AREA 2 SQ.FT.
FILL AREA 3 SQ.FT.

STAGE 1
CUT VOLUME 8 CU.YD.
FILL VOLUME 5 CU.YD.

STAGE 2
CUT VOLUME 3 CU.YD.
FILL VOLUME 7 CU.YD.

HWY. 13
STA. 203+00 TO STA. 204+00

MM41715 7/24/2023
R061613.DGN

DATE REVISED	DATE REVISED	FED.RD. DIST.NO.	STATE	JOB NO.	SHEET NO.	TOTAL SHEETS
		6	ARK.	061613	195	215
		CROSS SECTIONS				

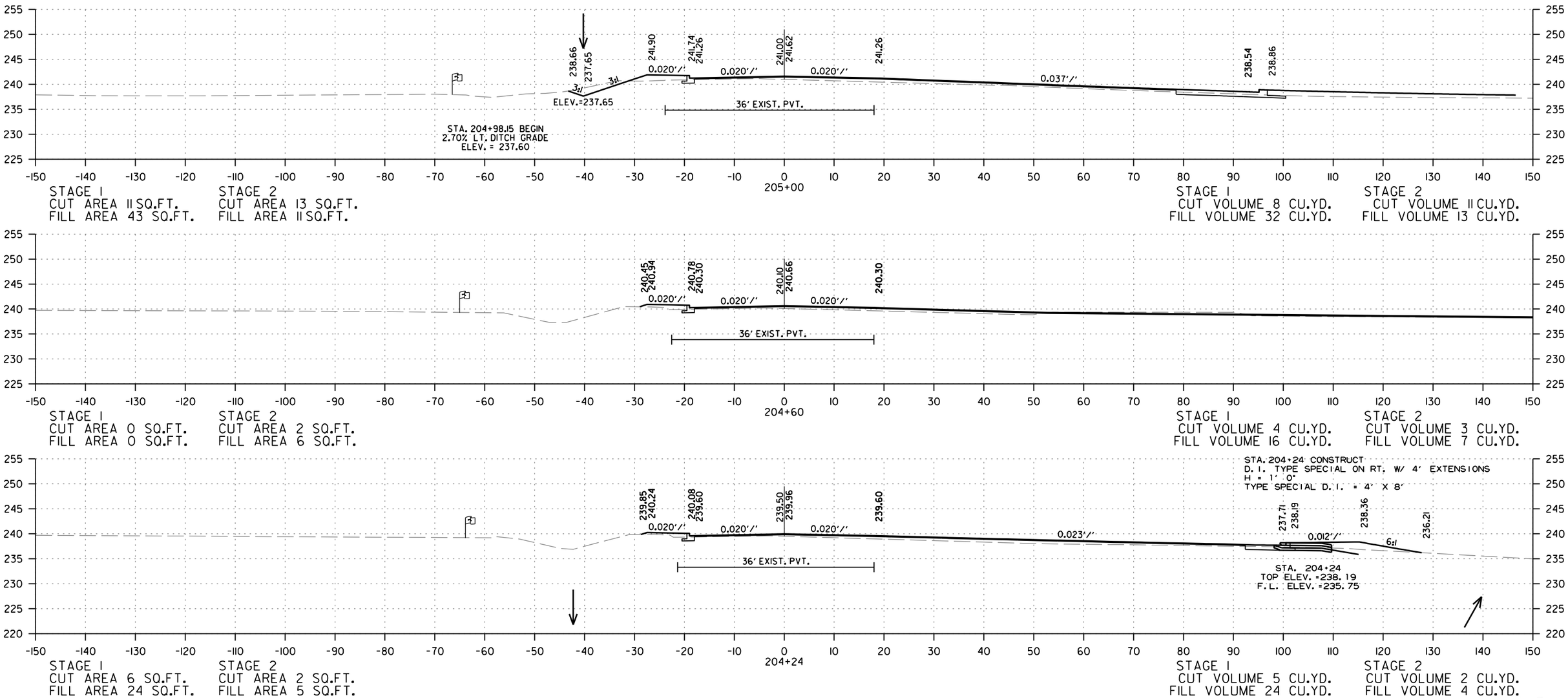

HWY. 13
STA. 204+24 TO STA. 205+00

MM41715 7/24/2023
R061613.DGN

DATE REVISED	DATE REVISED	FED.RD. DIST.NO.	STATE	JOB NO.	SHEET NO.	TOTAL SHEETS
		6	ARK.	061613	196	215
		CROSS SECTIONS				

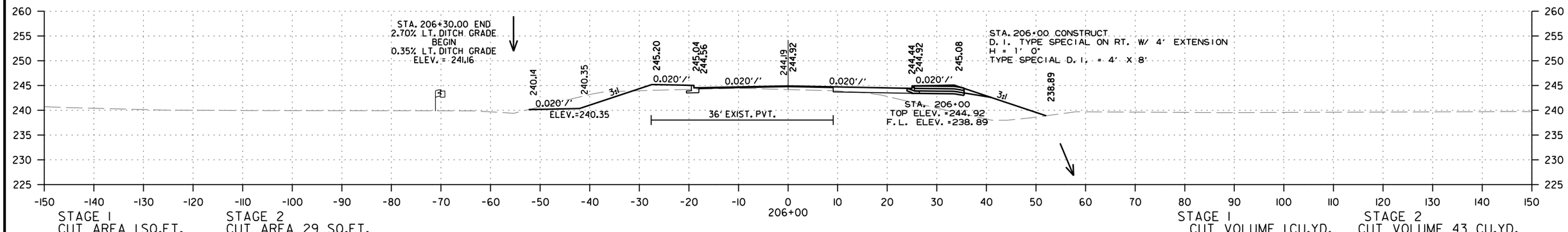

STAGE 1
CUT AREA 1 SQ.FT.
FILL AREA 108 SQ.FT.

STAGE 2
CUT AREA 29 SQ.FT.
FILL AREA 10 SQ.FT.

STAGE 1
CUT VOLUME 1 CU.YD.
FILL VOLUME 177 CU.YD.

STAGE 2
CUT VOLUME 43 CU.YD.
FILL VOLUME 19 CU.YD.

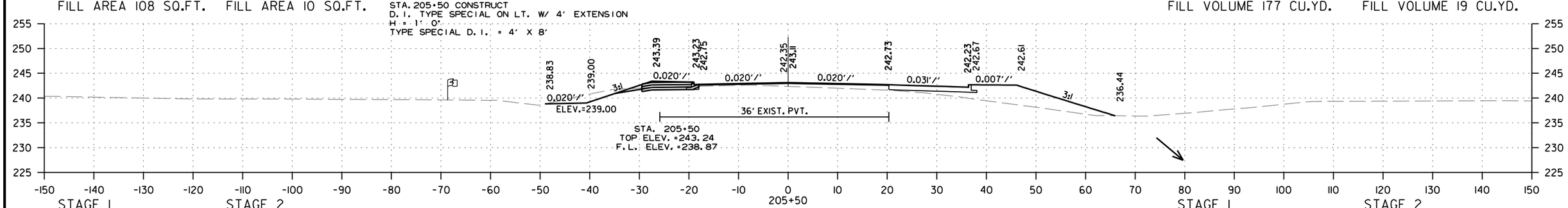

STAGE 1
CUT AREA 0 SQ.FT.
FILL AREA 83 SQ.FT.

STAGE 2
CUT AREA 17 SQ.FT.
FILL AREA 11 SQ.FT.

STAGE 1
CUT VOLUME 1 CU.YD.
FILL VOLUME 88 CU.YD.

STAGE 2
CUT VOLUME 25 CU.YD.
FILL VOLUME 15 CU.YD.

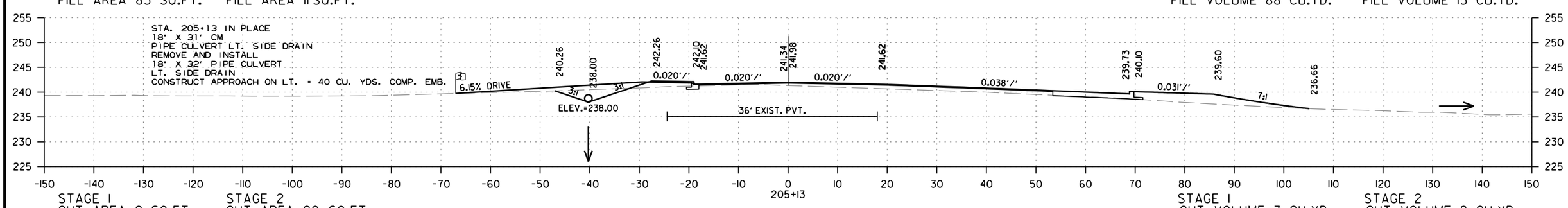

STAGE 1
CUT AREA 2 SQ.FT.
FILL AREA 46 SQ.FT.

STAGE 2
CUT AREA 20 SQ.FT.
FILL AREA 11 SQ.FT.

STAGE 1
CUT VOLUME 3 CU.YD.
FILL VOLUME 21 CU.YD.

STAGE 2
CUT VOLUME 8 CU.YD.
FILL VOLUME 5 CU.YD.

HWY. 13
STA. 205+13 TO STA. 206+00

MM41715 7/24/2023
R061613.DGN

DATE REVISED	DATE REVISED	FED.RD. DIST.NO.	STATE	JOB NO.	SHEET NO.	TOTAL SHEETS
		6	ARK.	061613	197	215
		CROSS SECTIONS				

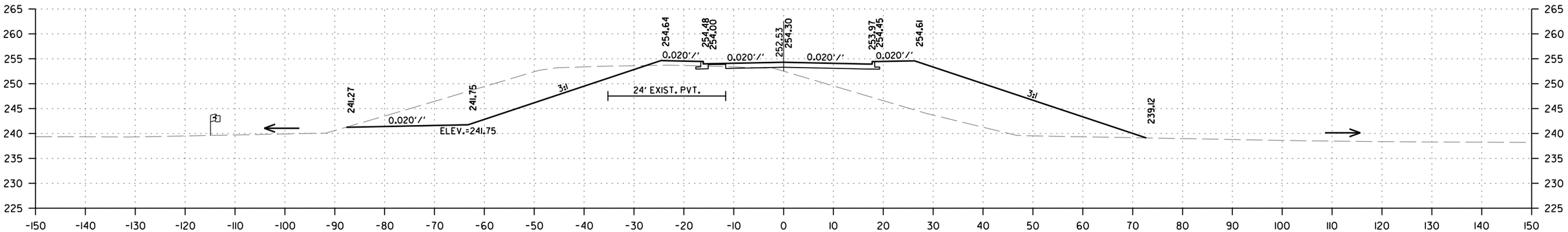

STAGE 1
CUT AREA 1 SQ.FT.
FILL AREA 422 SQ.FT.

STAGE 2
CUT AREA 245 SQ.FT.
FILL AREA 8 SQ.FT.

STAGE 1
CUT VOLUME 3 CU.YD.
FILL VOLUME 656 CU.YD.

STAGE 2
CUT VOLUME 391 CU.YD.
FILL VOLUME 13 CU.YD.

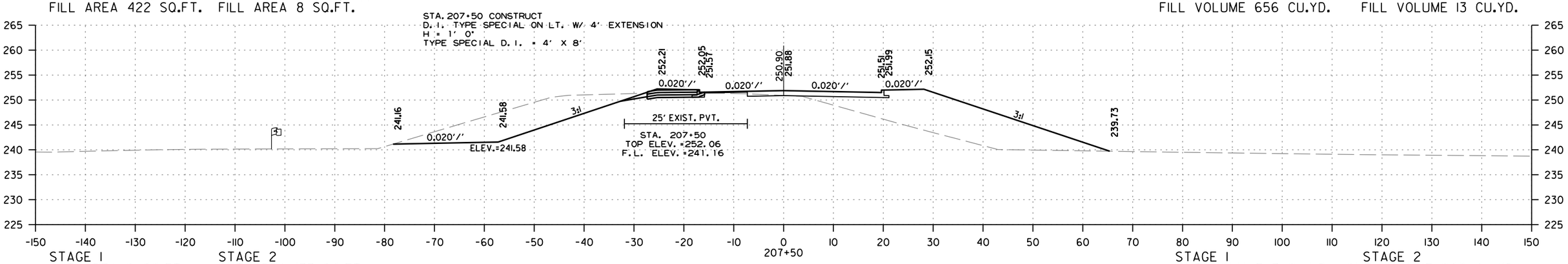

STAGE 1
CUT AREA 2 SQ.FT.
FILL AREA 286 SQ.FT.

STAGE 2
CUT AREA 177 SQ.FT.
FILL AREA 6 SQ.FT.

STAGE 1
CUT VOLUME 3 CU.YD.
FILL VOLUME 435 CU.YD.

STAGE 2
CUT VOLUME 260 CU.YD.
FILL VOLUME 12 CU.YD.

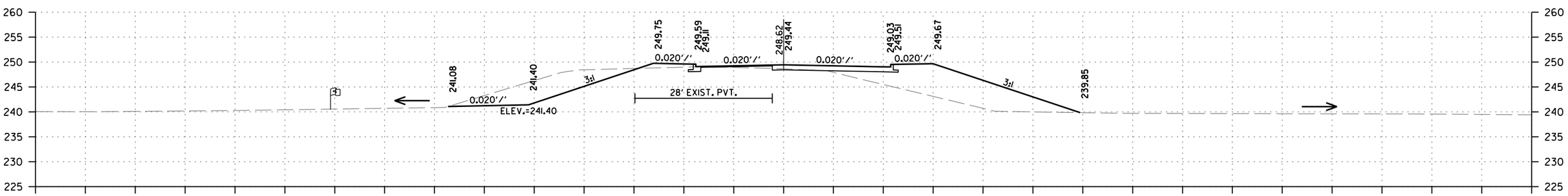

STAGE 1
CUT AREA 1 SQ.FT.
FILL AREA 184 SQ.FT.

STAGE 2
CUT AREA 104 SQ.FT.
FILL AREA 7 SQ.FT.

STAGE 1
CUT VOLUME 4 CU.YD.
FILL VOLUME 541 CU.YD.

STAGE 2
CUT VOLUME 246 CU.YD.
FILL VOLUME 31 CU.YD.

HWY. 13
STA. 207+00 TO STA. 208+00

WM41715 7/24/2023
R061613.DGN

DATE REVISED	DATE REVISED	FED.RD. DIST.NO.	STATE	JOB NO.	SHEET NO.	TOTAL SHEETS
		6	ARK.	061613	198	215
		CROSS SECTIONS				

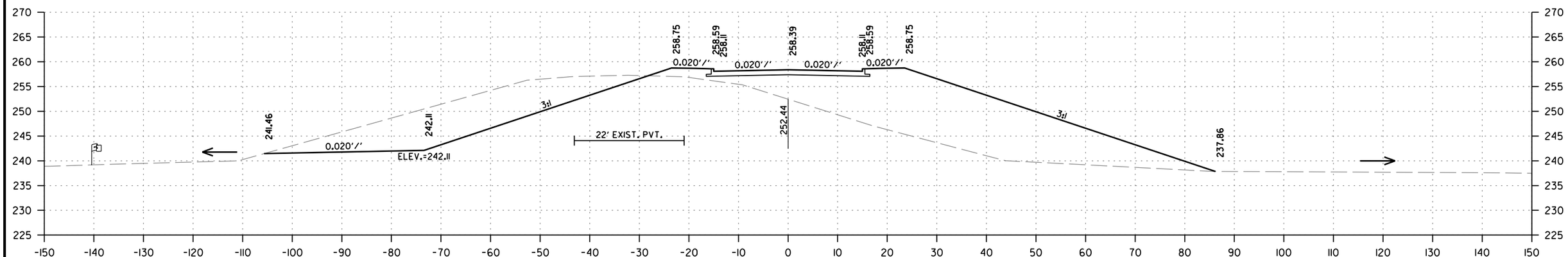

STAGE 1
CUT AREA 0 SQ.FT.
FILL AREA 766 SQ.FT.

STAGE 2
CUT AREA 392 SQ.FT.
FILL AREA 14 SQ.FT.

STAGE 1
CUT VOLUME 0 CU.YD.
FILL VOLUME 1253 CU.YD.

STAGE 2
CUT VOLUME 656 CU.YD.
FILL VOLUME 25 CU.YD.

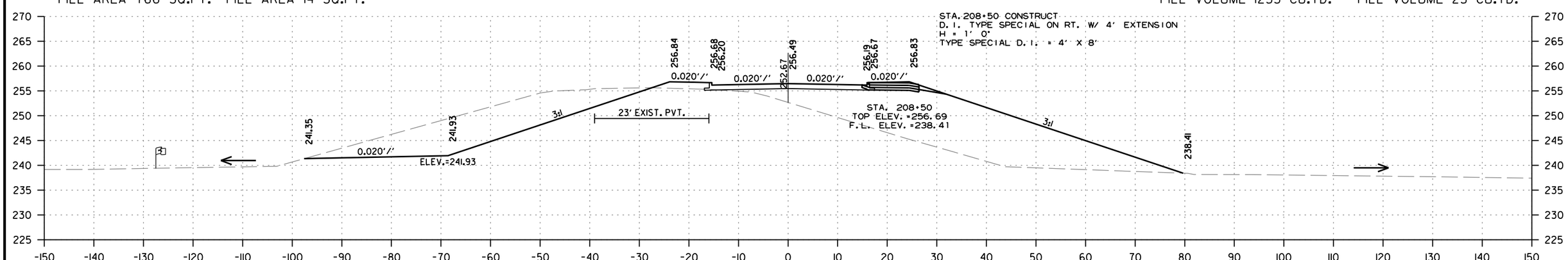

STAGE 1
CUT AREA 0 SQ.FT.
FILL AREA 587 SQ.FT.

STAGE 2
CUT AREA 316 SQ.FT.
FILL AREA 13 SQ.FT.

STAGE 1
CUT VOLUME 1CU.YD.
FILL VOLUME 934 CU.YD.

STAGE 2
CUT VOLUME 519 CU.YD.
FILL VOLUME 19 CU.YD.

HWY. 13
STA. 208+50 TO STA. 209+00

MM41715 7/24/2023
R061613.DGN

DATE REVISED	DATE REVISED	FED.RD. DIST.NO.	STATE	JOB NO.	SHEET NO.	TOTAL SHEETS
		6	ARK.	061613	199	215
		CROSS SECTIONS				

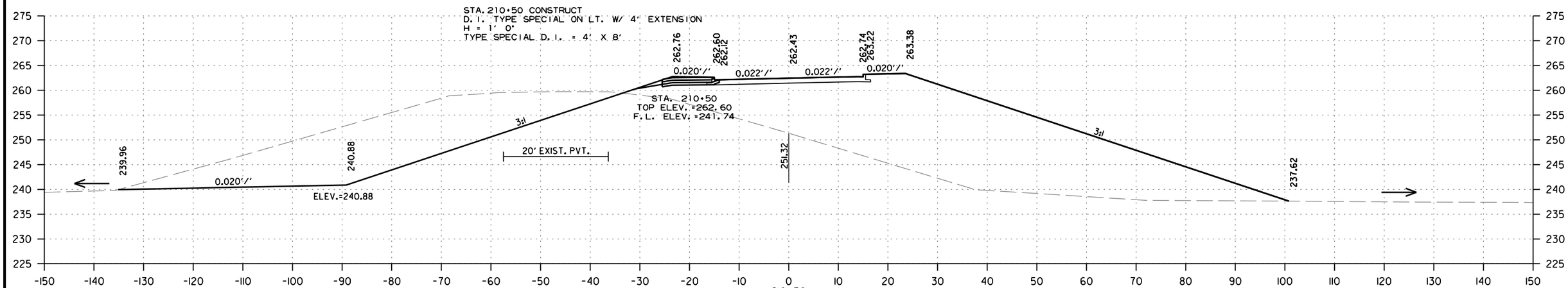

STAGE 1
CUT AREA 0 SQ.FT.
FILL AREA 1413 SQ.FT.

STAGE 2
CUT AREA 644 SQ.FT.
FILL AREA 0 SQ.FT.

STAGE 1
CUT VOLUME 0 CU.YD.
FILL VOLUME 2402 CU.YD.

STAGE 2
CUT VOLUME 1197 CU.YD.
FILL VOLUME 0 CU.YD.

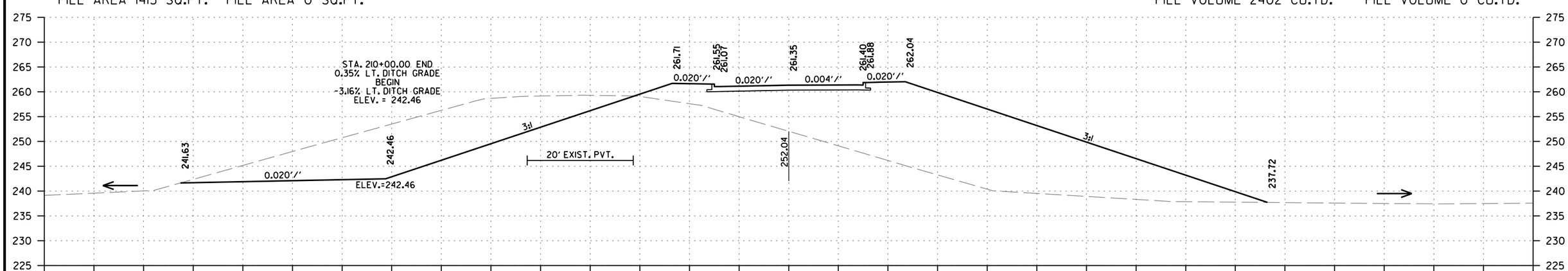

STA. 209+43.27 BEGIN SUPERELEVATION

STAGE 1
CUT AREA 0 SQ.FT.
FILL AREA 1181 SQ.FT.

STAGE 2
CUT AREA 575 SQ.FT.
FILL AREA 0 SQ.FT.

STAGE 1
CUT VOLUME 0 CU.YD.
FILL VOLUME 3606 CU.YD.

STAGE 2
CUT VOLUME 1791 CU.YD.
FILL VOLUME 26 CU.YD.

HWY. 13
STA. 210+00 TO STA. 210+50

MM41715 7/24/2023
R061613.DGN

DATE REVISED	DATE REVISED	FED.RD. DIST.NO.	STATE	JOB NO.	SHEET NO.	TOTAL SHEETS
		6	ARK.	061613	200	215
		CROSS SECTIONS				

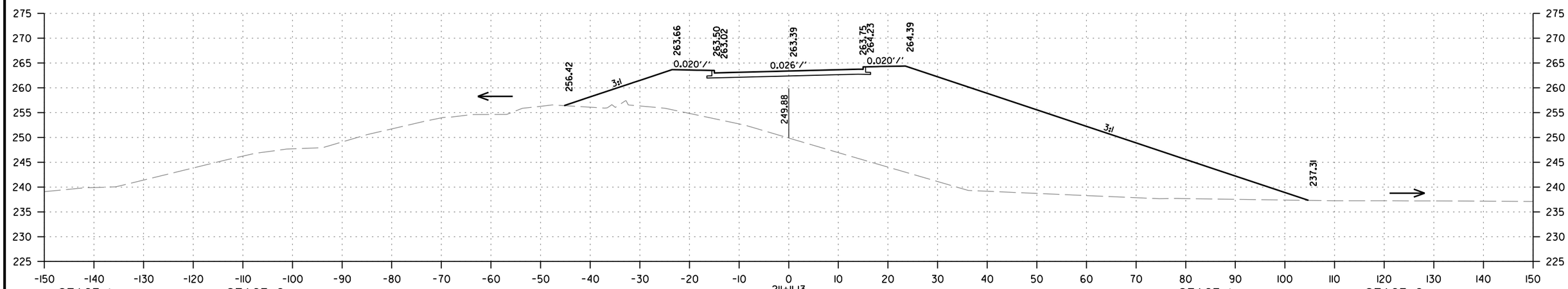

STAGE 1
CUT AREA 0 SQ.FT.
FILL AREA 1703 SQ.FT.

STAGE 2
CUT AREA 0 SQ.FT.
FILL AREA 0 SQ.FT.

STAGE 1
CUT VOLUME 0 CU.YD.
FILL VOLUME 681 CU.YD.

STAGE 2
CUT VOLUME 154 CU.YD.
FILL VOLUME 0 CU.YD.

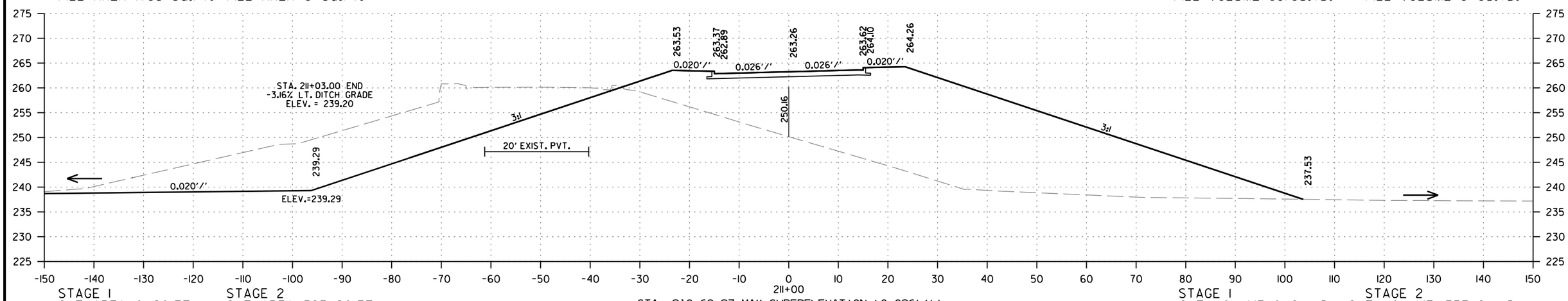

STA. 210+68.27 MAX SUPERELEVATION (0.026'/')

STAGE 1
CUT AREA 0 SQ.FT.
FILL AREA 1599 SQ.FT.

STAGE 2
CUT AREA 593 SQ.FT.
FILL AREA 0 SQ.FT.

STAGE 1
CUT VOLUME 0 CU.YD.
FILL VOLUME 2789 CU.YD.

STAGE 2
CUT VOLUME 1357 CU.YD.
FILL VOLUME 0 CU.YD.

HWY. 13
STA. 211+00 TO STA. 211+11.13

MM41715 7/24/2023
R061613.DGN

DATE REVISED	DATE REVISED	FED.RD. DIST.NO.	STATE	JOB NO.	SHEET NO.	TOTAL SHEETS
		6	ARK.	061613	201	215
		CROSS SECTIONS				

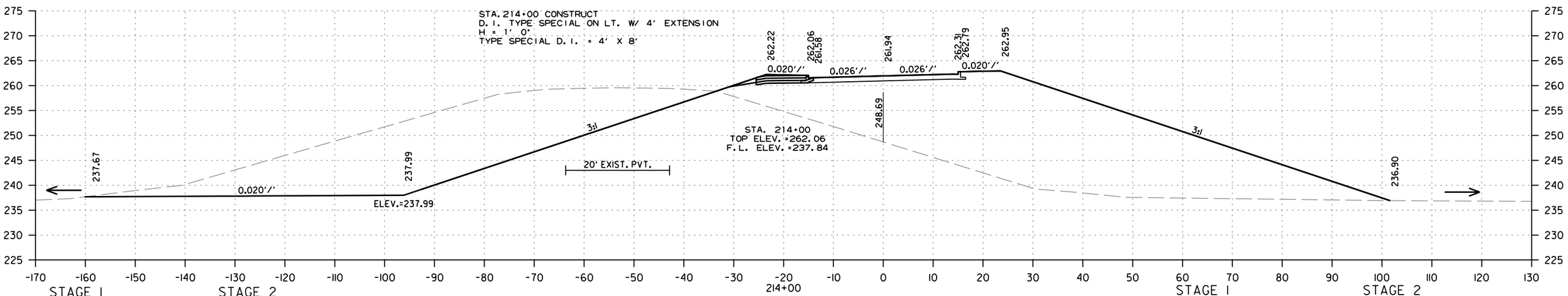

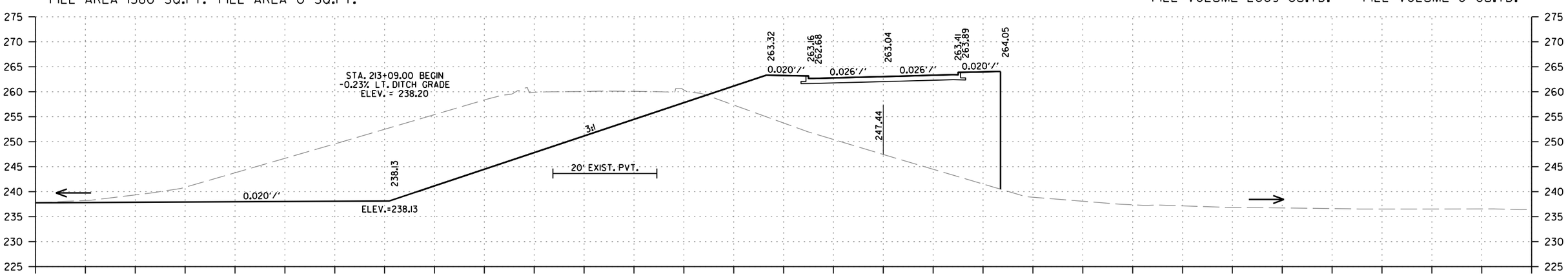

HWY. 13
STA. 213+38.33 TO STA. 214+00

MM41715 7/24/2023
R061613.DGN

DATE REVISED	DATE REVISED	FED.RD. DIST.NO.	STATE	JOB NO.	SHEET NO.	TOTAL SHEETS
		6	ARK.	061613	202	215
		CROSS SECTIONS				

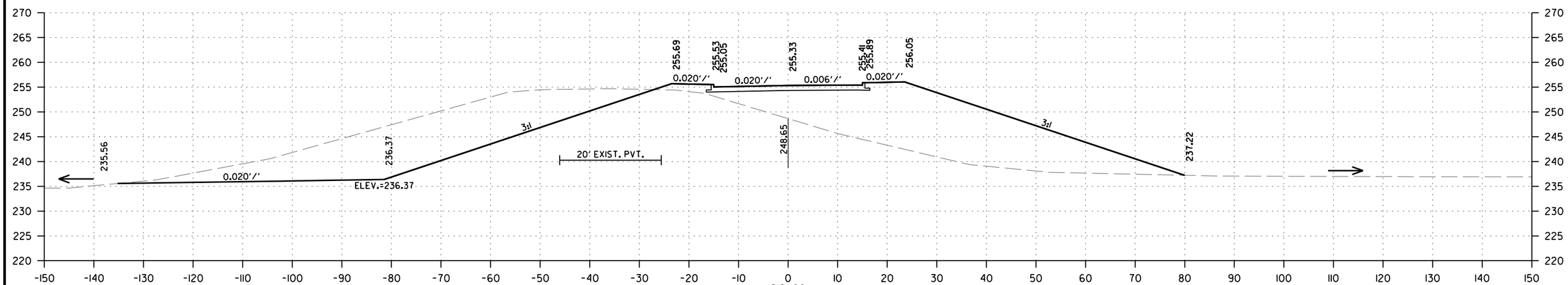

STAGE 1
CUT AREA 0 SQ.FT.
FILL AREA 730 SQ.FT.

STAGE 2
CUT AREA 630 SQ.FT.
FILL AREA 11 SQ.FT.

STA. 215+37.49 MAX SUPERELEVATION (0.026'/')

STAGE 1
CUT VOLUME 0 CU.YD.
FILL VOLUME 3593 CU.YD.

STAGE 2
CUT VOLUME 2711 CU.YD.
FILL VOLUME 20 CU.YD.

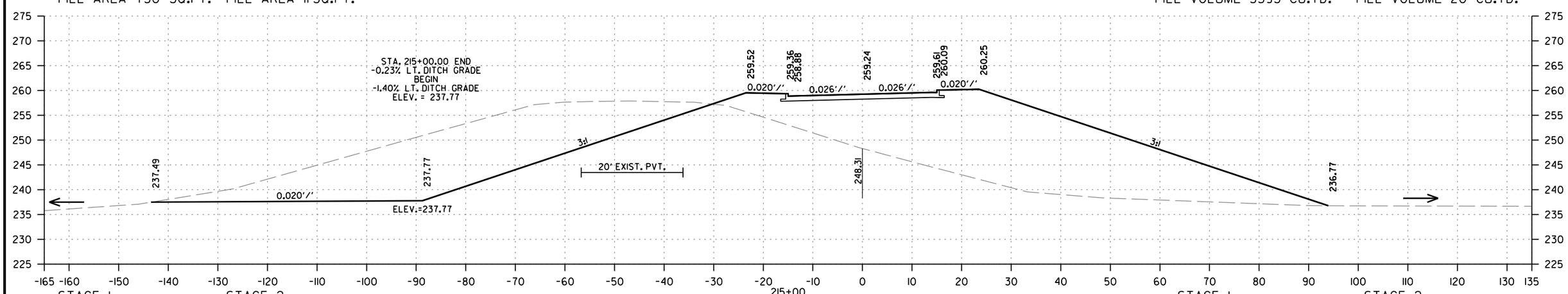

STAGE 1
CUT AREA 0 SQ.FT.
FILL AREA 1210 SQ.FT.

STAGE 2
CUT AREA 834 SQ.FT.
FILL AREA 0 SQ.FT.

STAGE 1
CUT VOLUME 0 CU.YD.
FILL VOLUME 5167 CU.YD.

STAGE 2
CUT VOLUME 3413 CU.YD.
FILL VOLUME 0 CU.YD.

HWY. 13
STA. 215+00 TO STA. 216+00

MM41715 7/24/2023
R06161 3.DGN

DATE REVISED	DATE REVISED	FED.RD. DIST.NO.	STATE	JOB NO.	SHEET NO.	TOTAL SHEETS
		6	ARK.	061613	203	215
		CROSS SECTIONS				

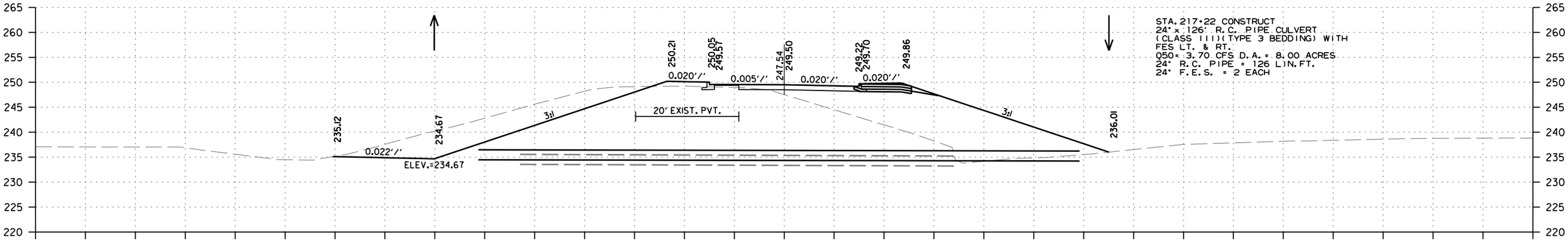

STAGE 1
CUT AREA 1 SQ.FT.
FILL AREA 411 SQ.FT.

STAGE 2
CUT AREA 217 SQ.FT.
FILL AREA 9 SQ.FT.

STAGE 1
CUT VOLUME 0 CU.YD.
FILL VOLUME 189 CU.YD.

STAGE 2
CUT VOLUME 111 CU.YD.
FILL VOLUME 4 CU.YD.

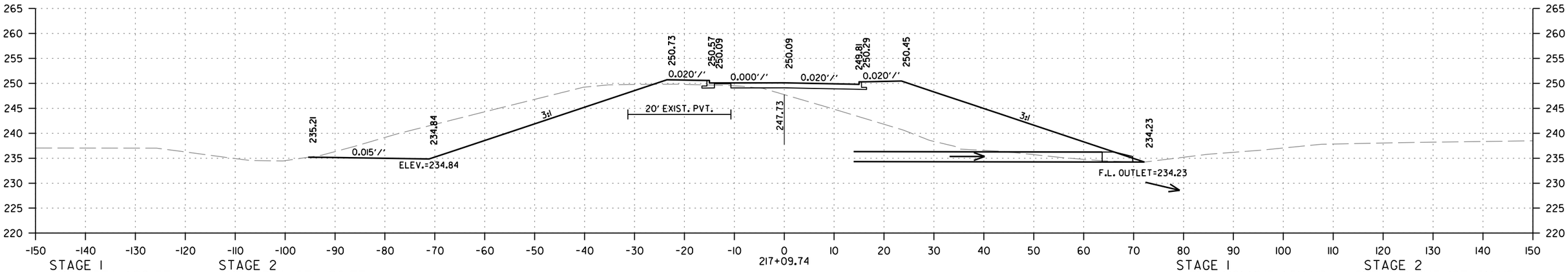

STAGE 1
CUT AREA 1 SQ.FT.
FILL AREA 422 SQ.FT.

STAGE 2
CUT AREA 274 SQ.FT.
FILL AREA 8 SQ.FT.

STAGE 1
CUT VOLUME 1 CU.YD.
FILL VOLUME 149 CU.YD.

STAGE 2
CUT VOLUME 105 CU.YD.
FILL VOLUME 3 CU.YD.

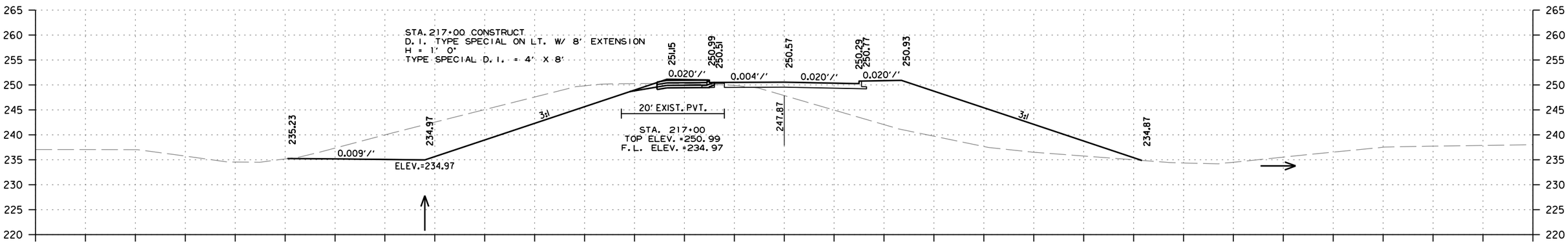

STA. 216+62.50 BEGIN SUPERELEVATION
STA. 216+62.49 END SUPERELEVATION

STAGE 1
CUT AREA 2 SQ.FT.
FILL AREA 406 SQ.FT.

STAGE 2
CUT AREA 309 SQ.FT.
FILL AREA 8 SQ.FT.

STAGE 1
CUT VOLUME 4 CU.YD.
FILL VOLUME 2104 CU.YD.

STAGE 2
CUT VOLUME 1739 CU.YD.
FILL VOLUME 35 CU.YD.

HWY. 13
STA. 217+00 TO STA. 217+22

MM41715 7/24/2023
R061613.DGN

DATE REVISED	DATE REVISED	FED.RD. DIST.NO.	STATE	JOB NO.	SHEET NO.	TOTAL SHEETS
		6	ARK.	061613	204	215
		CROSS SECTIONS				

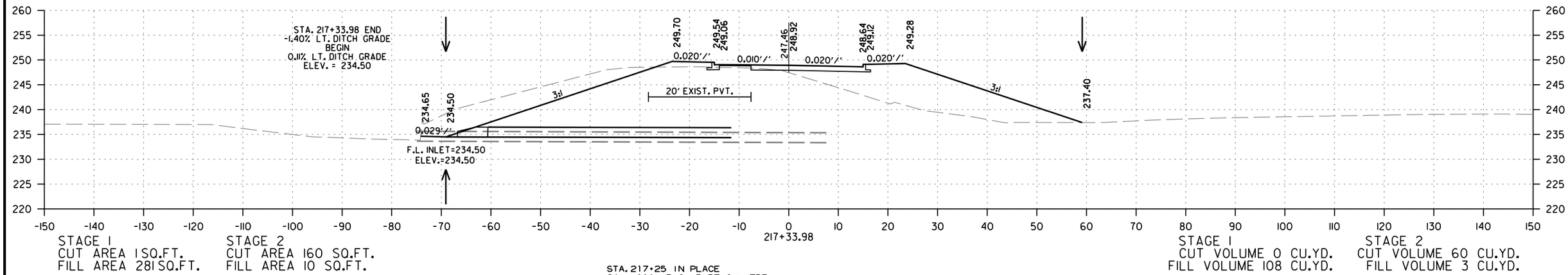

STAGE 1
CUT AREA 1 SQ.FT.
FILL AREA 281 SQ.FT.

STAGE 2
CUT AREA 160 SQ.FT.
FILL AREA 10 SQ.FT.

STAGE 1
CUT VOLUME 0 CU.YD.
FILL VOLUME 108 CU.YD.

STAGE 2
CUT VOLUME 60 CU.YD.
FILL VOLUME 3 CU.YD.

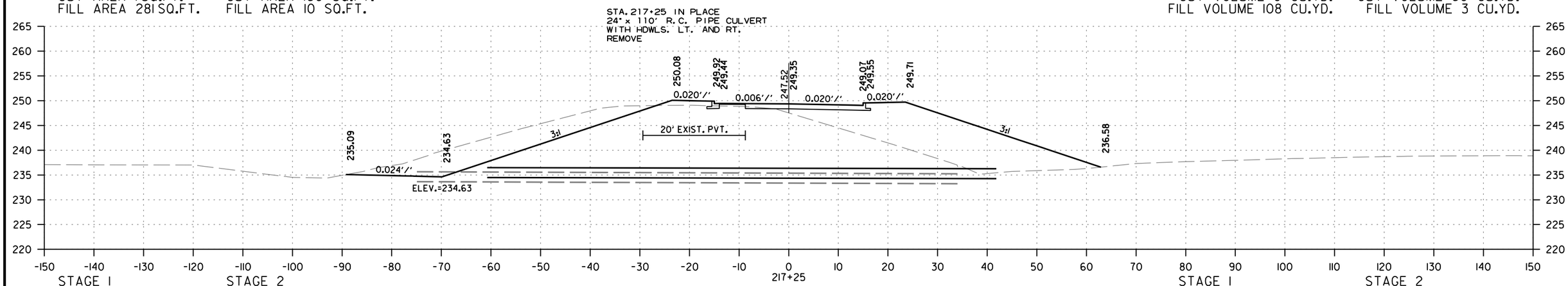

STAGE 1
CUT AREA 1 SQ.FT.
FILL AREA 368 SQ.FT.

STAGE 2
CUT AREA 203 SQ.FT.
FILL AREA 9 SQ.FT.

STAGE 1
CUT VOLUME 0 CU.YD.
FILL VOLUME 28 CU.YD.

STAGE 2
CUT VOLUME 15 CU.YD.
FILL VOLUME 1 CU.YD.

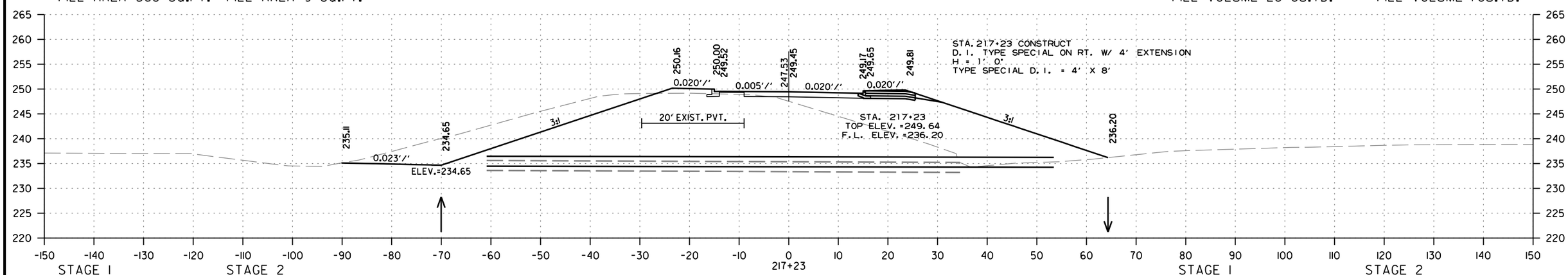

STAGE 1
CUT AREA 1 SQ.FT.
FILL AREA 397 SQ.FT.

STAGE 2
CUT AREA 213 SQ.FT.
FILL AREA 9 SQ.FT.

STAGE 1
CUT VOLUME 0 CU.YD.
FILL VOLUME 15 CU.YD.

STAGE 2
CUT VOLUME 8 CU.YD.
FILL VOLUME 0 CU.YD.

HWY. 13
STA. 217+23 TO STA. 217+33.98

WM41715 7/24/2023
R061613.DGN

DATE REVISED	DATE REVISED	FED.RD. DIST.NO.	STATE	JOB NO.	SHEET NO.	TOTAL SHEETS
		6	ARK.	061613	205	215
		CROSS SECTIONS				

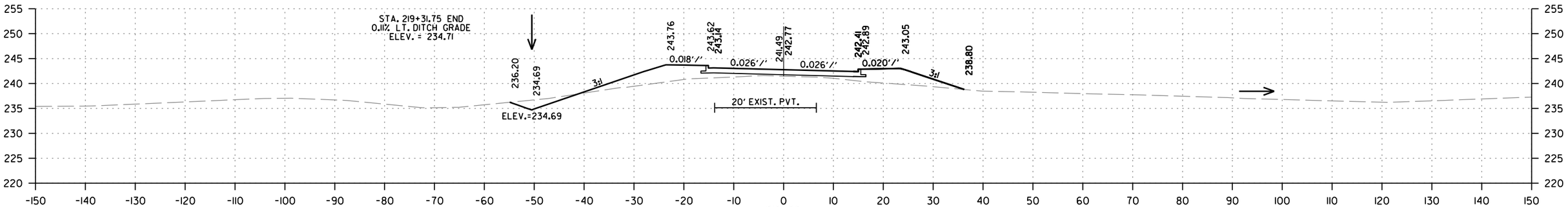

STAGE 1
CUT AREA 0 SQ.FT.
FILL AREA 47 SQ.FT.

STAGE 2
CUT AREA 0 SQ.FT.
FILL AREA 0 SQ.FT.

STAGE 1
CUT VOLUME 0 CU.YD.
FILL VOLUME 23 CU.YD.

STAGE 2
CUT VOLUME 7 CU.YD.
FILL VOLUME 10 CU.YD.

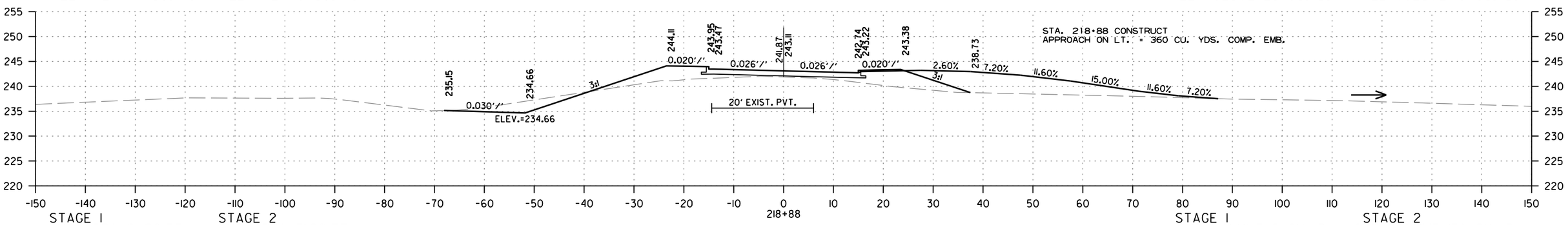

STAGE 1
CUT AREA 0 SQ.FT.
FILL AREA 56 SQ.FT.

STAGE 2
CUT AREA 31 SQ.FT.
FILL AREA 44 SQ.FT.

STAGE 1
CUT VOLUME 2 CU.YD.
FILL VOLUME 253 CU.YD.

STAGE 2
CUT VOLUME 158 CU.YD.
FILL VOLUME 104 CU.YD.

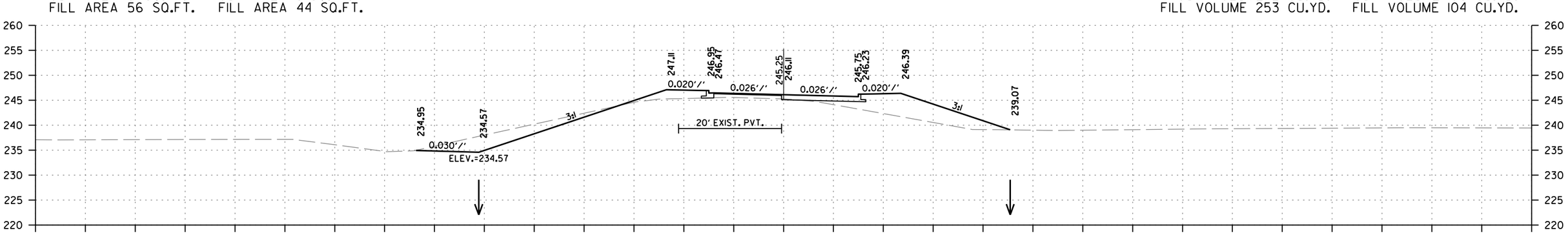

STA. 217+87.50 MAX SUPERELEVATION (0.026'/')

STAGE 1
CUT AREA 1 SQ.FT.
FILL AREA 99 SQ.FT.

STAGE 2
CUT AREA 66 SQ.FT.
FILL AREA 20 SQ.FT.

STAGE 1
CUT VOLUME 2 CU.YD.
FILL VOLUME 465 CU.YD.

STAGE 2
CUT VOLUME 276 CU.YD.
FILL VOLUME 37 CU.YD.

HWY. 13
STA. 218+00 TO STA. 219+00

WM41715 7/24/2023
R061613.DGN

DATE REVISED	DATE REVISED	FED.RD. DIST.NO.	STATE	JOB NO.	SHEET NO.	TOTAL SHEETS
		6	ARK.	061613	206	215
		CROSS SECTIONS				

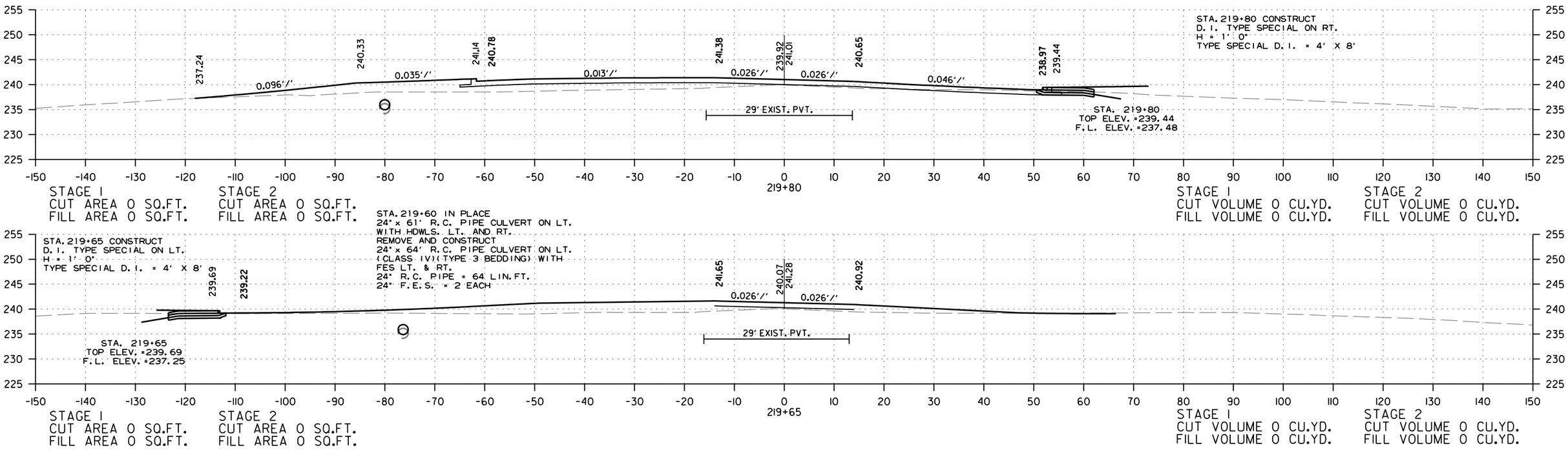

HWY. 13
STA. 219+56 TO STA. 219+80

MM41715 7/24/2023
R061613.DGN

DATE REVISED	DATE REVISED	FED.RD. DIST.NO.	STATE	JOB NO.	SHEET NO.	TOTAL SHEETS
		6	ARK.	061613	207	215
		CROSS SECTIONS				

STA. 220+75 CONSTRUCT
D. I. ON RT.
& 18" X 32' PIPE OUTLET
CONNECT TO JUNCTION BOX @ STA. 220+40 RT.
TY C = 4' X 3'
TY MO = 4' I.D.
H = 3' 10"
18" SLPCCS PIPE = 32 LIN.FT.
18" R.C. PIPE = 32 LIN.FT.

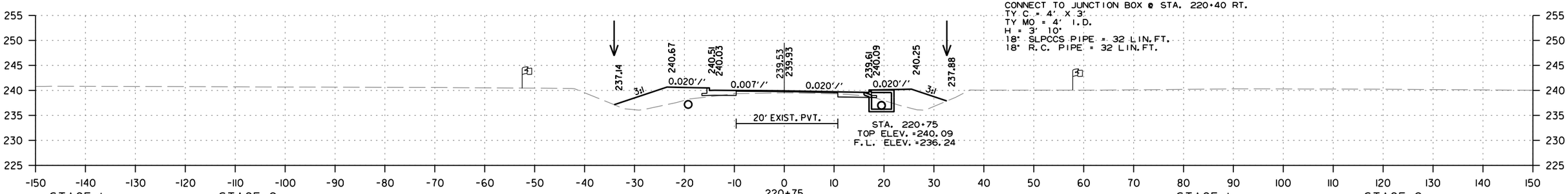

STAGE 1
CUT AREA 3 SQ.FT.
FILL AREA 38 SQ.FT.

STAGE 2
CUT AREA 1 SQ.FT.
FILL AREA 46 SQ.FT.

STAGE 1
CUT VOLUME 3 CU.YD.
FILL VOLUME 62 CU.YD.

STAGE 2
CUT VOLUME 1 CU.YD.
FILL VOLUME 31 CU.YD.

STA. 220+40 CONSTRUCT
JUNCTION BOX ON LT.
& 24" X 12' STUB INLET W/ F.E.S. LT.
& 24" X 42' PIPE OUTLET
CONNECT TO D. I. @ STA. 220+40 RT. H = 5' 10"
Q50= 12.56 CFS D.A. =8.00 ACRES
TYPE E JUNCTION BOX = 3' X 3'
24" R.C. PIPE (CLASS III) = 12 LIN.FT.
24" R.C. PIPE (CLASS IV) = 42 LIN.FT.
24" F.E.S. = 1 EACH

STA. 220+40 CONSTRUCT
JUNCTION BOX ON RT.
& 24" X 10' STUB OUTLET W/ F.E.S. RT.
TYPE E JUNCTION BOX = 3' X 3'
H = 5' 3"
24" R.C. PIPE = 10 LIN.FT.
24" F.E.S. = 1 EACH

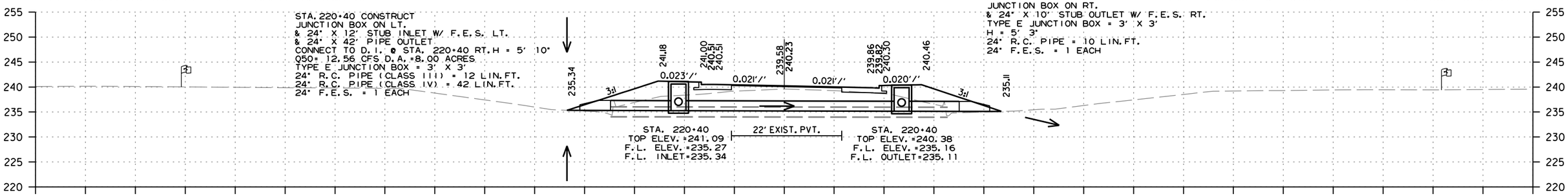

STAGE 1
CUT AREA 1 SQ.FT.
FILL AREA 57 SQ.FT.

STAGE 2
CUT AREA 0 SQ.FT.
FILL AREA 2 SQ.FT.

STAGE 1
CUT VOLUME 1 CU.YD.
FILL VOLUME 57 CU.YD.

STAGE 2
CUT VOLUME 0 CU.YD.
FILL VOLUME 1 CU.YD.

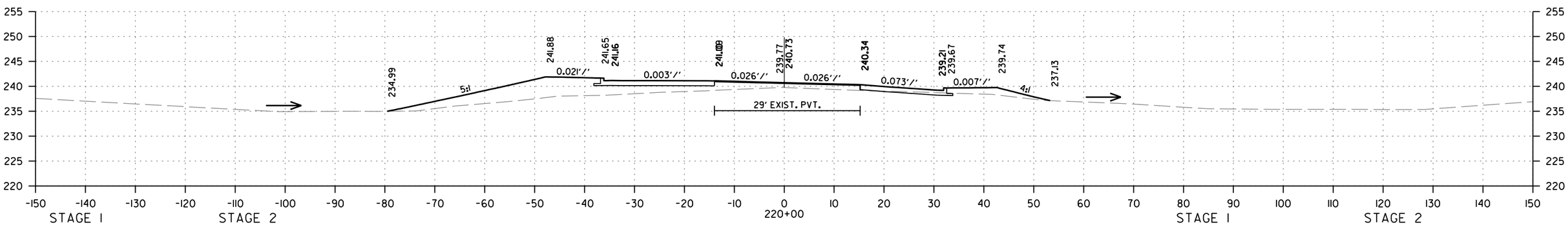

STAGE 1
CUT AREA 0 SQ.FT.
FILL AREA 20 SQ.FT.

STAGE 2
CUT AREA 0 SQ.FT.
FILL AREA 0 SQ.FT.

STAGE 1
CUT VOLUME 0 CU.YD.
FILL VOLUME 7 CU.YD.

STAGE 2
CUT VOLUME 0 CU.YD.
FILL VOLUME 0 CU.YD.

HWY. 13
STA. 220+00 TO STA. 220+75

MM41715 7/24/2023
R061613.DGN

DATE REVISED	DATE REVISED	FED.RD. DIST.NO.	STATE	JOB NO.	SHEET NO.	TOTAL SHEETS
		6	ARK.	061613	208	215
		CROSS SECTIONS				

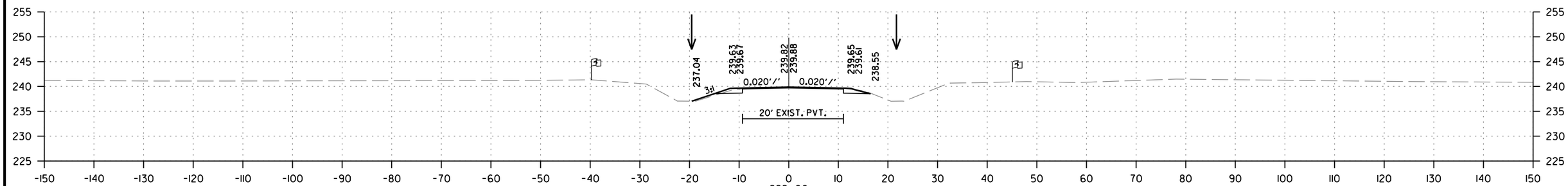

STAGE 1
CUT AREA 4 SQ.FT.
FILL AREA 0 SQ.FT.

STAGE 2
CUT AREA 2 SQ.FT.
FILL AREA 2 SQ.FT.

222+00
STA. 221+40.91 END SUPERELEVATION

STAGE 1
CUT VOLUME 12 CU.YD.
FILL VOLUME 19 CU.YD.

STAGE 2
CUT VOLUME 6 CU.YD.
FILL VOLUME 25 CU.YD.

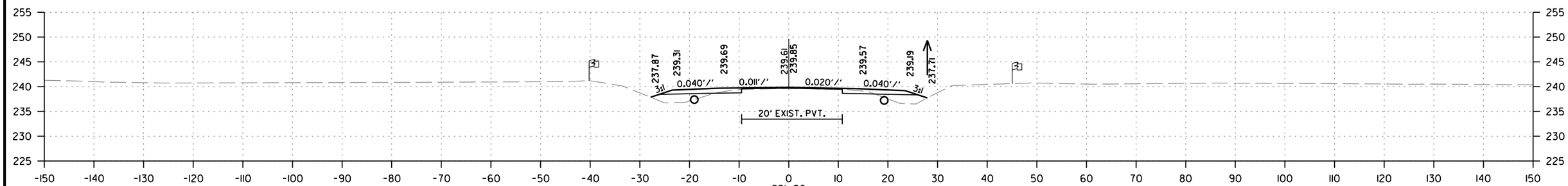

STAGE 1
CUT AREA 4 SQ.FT.
FILL AREA 13 SQ.FT.

STAGE 2
CUT AREA 2 SQ.FT.
FILL AREA 15 SQ.FT.

STA. 221+07 CONSTRUCT
D. I. ON LT.
& 18" X 30' STUB INLET W/ F.E.S. LT.
& 18" X 64' PIPE OUTLET
CONNECT TO JUNCTION BOX @ STA. 220+40 LT.
H = 3' 8"
TY C = 4' X 4'
TY MO = 4' I.D.
18" R.C. PIPE = 94 LIN.FT.
18" SLPCCS PIPE = 64 LIN.FT.
18" F.E.S. = 1 EACH

221+20
END SITE 2
END JOB 061613
BEGIN 100' TRANSITION

STA. 221+07 CONSTRUCT
D. I. ON RT.
& 18" X 30' STUB INLET W/ F.E.S. RT.
& 18" X 28' PIPE OUTLET
CONNECT TO D. I. @ STA. 220+75 RT.
TY C = 4' X 3'
TY MO = 4' I.D.
H = 3' 8"
18" R.C. PIPE = 58 LIN.FT.
18" SLPCCS PIPE = 28 LIN.FT.
18" F.E.S. PIPE = 1 EACH

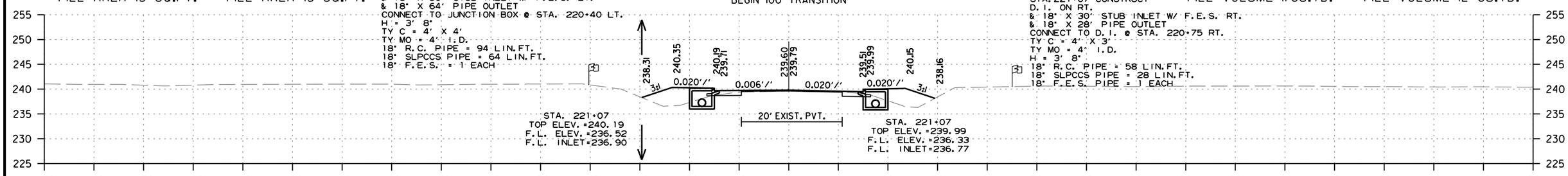

STAGE 1
CUT AREA 4 SQ.FT.
FILL AREA 32 SQ.FT.

STAGE 2
CUT AREA 2 SQ.FT.
FILL AREA 35 SQ.FT.

221+07
STA. 221+05 END 60' TAPER

STAGE 1
CUT VOLUME 1 CU.YD.
FILL VOLUME 9 CU.YD.

STAGE 2
CUT VOLUME 0 CU.YD.
FILL VOLUME 5 CU.YD.

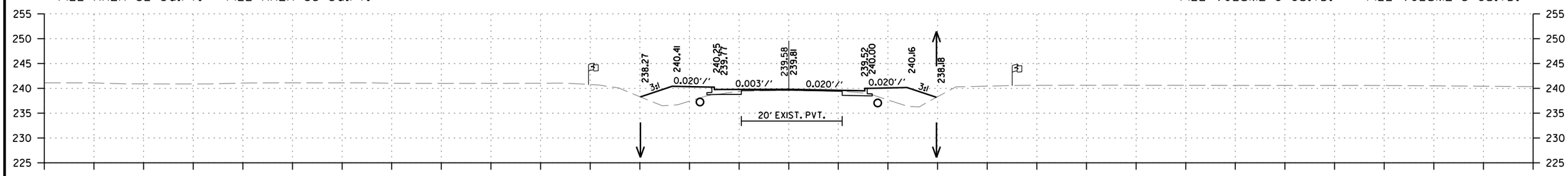

STAGE 1
CUT AREA 2 SQ.FT.
FILL AREA 36 SQ.FT.

STAGE 2
CUT AREA 0 SQ.FT.
FILL AREA 0 SQ.FT.

221+00

STAGE 1
CUT VOLUME 2 CU.YD.
FILL VOLUME 34 CU.YD.

STAGE 2
CUT VOLUME 0 CU.YD.
FILL VOLUME 21 CU.YD.

HWY. 13
STA. 221+00 TO STA. 222+00

MM41715 7/24/2023
R061613.DGN

DATE REVISED	DATE REVISED	FED.RD. DIST.NO.	STATE	JOB NO.	SHEET NO.	TOTAL SHEETS
		6	ARK.	061613	209	215
		CROSS SECTIONS				

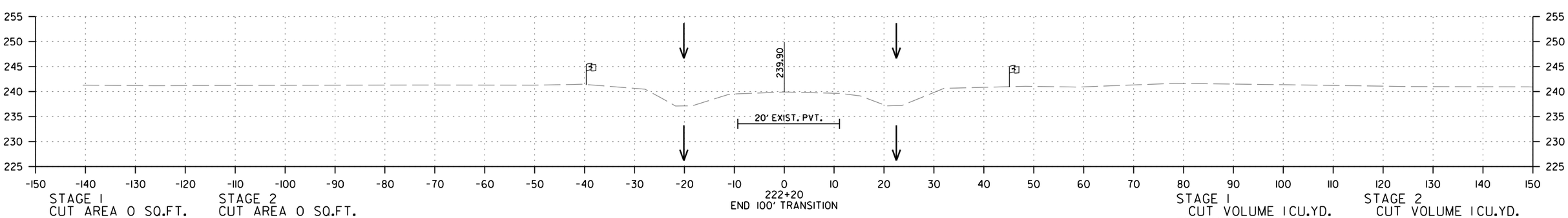

STAGE 1
CUT AREA 0 SQ.FT.
FILL AREA 0 SQ.FT.

STAGE 2
CUT AREA 0 SQ.FT.
FILL AREA 0 SQ.FT.

STAGE 1
CUT VOLUME 1 CU.YD.
FILL VOLUME 0 CU.YD.

STAGE 2
CUT VOLUME 1 CU.YD.
FILL VOLUME 1 CU.YD.

HWY. 13
STA. 222+20 TO STA. 222+20

MM41715 7/24/2023
R06161 3.DGN

DATE REVISED	DATE REVISED	FED.RD. DIST.NO.	STATE	JOB NO.	SHEET NO.	TOTAL SHEETS
		6	ARK.	061613	210	215
		CROSS SECTIONS				

STA 1003+68 IN PLACE
D. I. IN MEDIAN
& 24" X 90' R.C. PIPE INNLET
& 24" X 87' R.C. PIPE OUTLET
WITH HDWLS LT. AND RT.
RETAIN

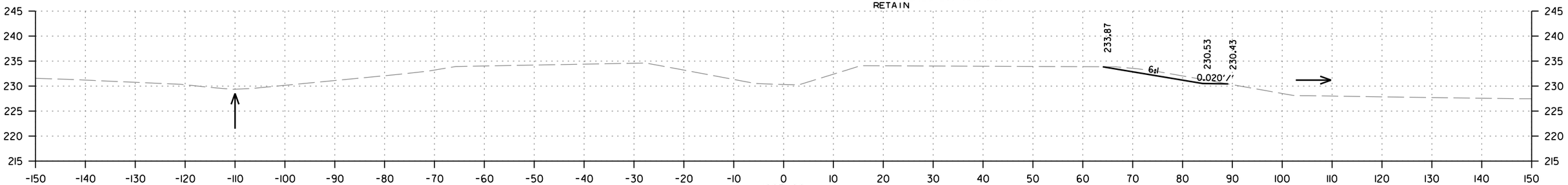

STAGE 1
CUT AREA 0 SQ.FT.
FILL AREA 0 SQ.FT.

STAGE 2
CUT AREA 16 SQ.FT.
FILL AREA 0 SQ.FT.

STAGE 1
CUT VOLUME 0 CU.YD.
FILL VOLUME 0 CU.YD.

STAGE 2
CUT VOLUME 70 CU.YD.
FILL VOLUME 0 CU.YD.

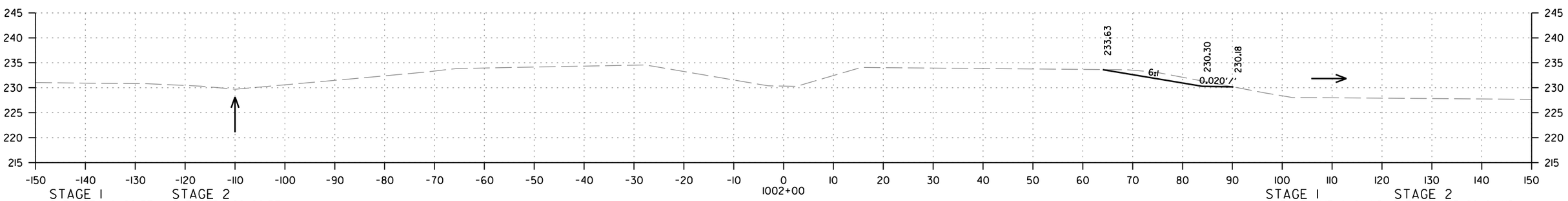

STAGE 1
CUT AREA 0 SQ.FT.
FILL AREA 0 SQ.FT.

STAGE 2
CUT AREA 22 SQ.FT.
FILL AREA 0 SQ.FT.

STAGE 1
CUT VOLUME 0 CU.YD.
FILL VOLUME 0 CU.YD.

STAGE 2
CUT VOLUME 28 CU.YD.
FILL VOLUME 0 CU.YD.

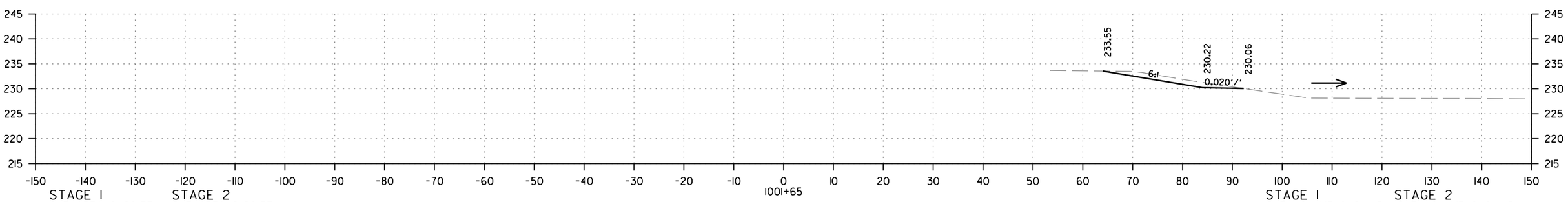

STAGE 1
CUT AREA 0 SQ.FT.
FILL AREA 0 SQ.FT.

STAGE 2
CUT AREA 21 SQ.FT.
FILL AREA 0 SQ.FT.

STAGE 1
CUT VOLUME 0 CU.YD.
FILL VOLUME 0 CU.YD.

STAGE 2
CUT VOLUME 0 CU.YD.
FILL VOLUME 0 CU.YD.

I-40 - SITE 1

STA. 1001+65 TO STA. 1003+00

MM41715 7/24/2023
R06161 3.DGN

DATE REVISED	DATE REVISED	FED.RD. DIST.NO.	STATE	JOB NO.	SHEET NO.	TOTAL SHEETS
		6	ARK.	061613	211	215
		CROSS SECTIONS				

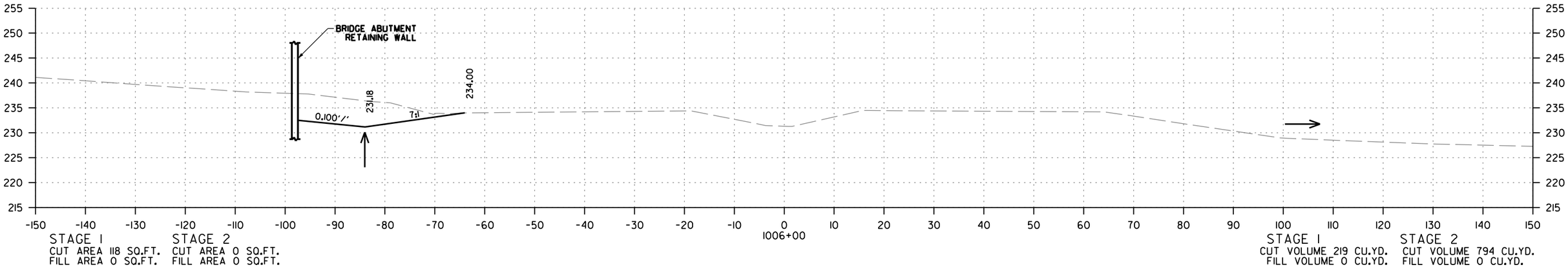

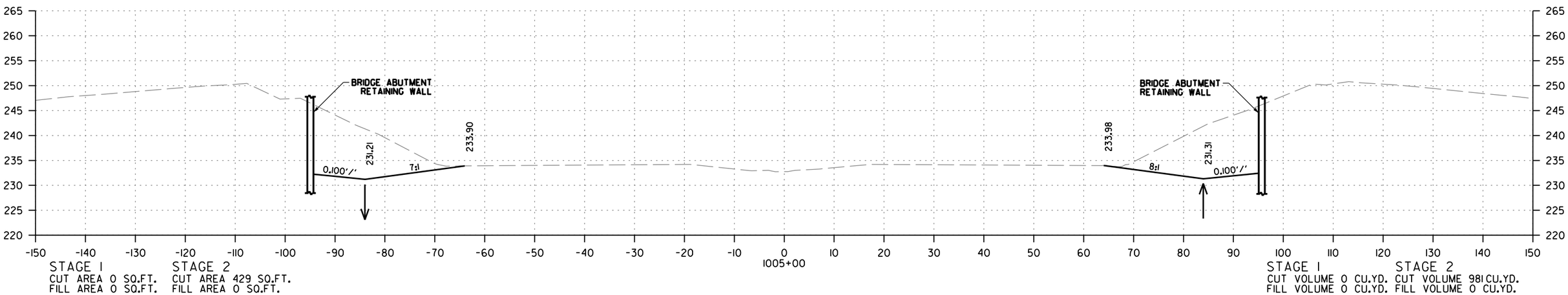

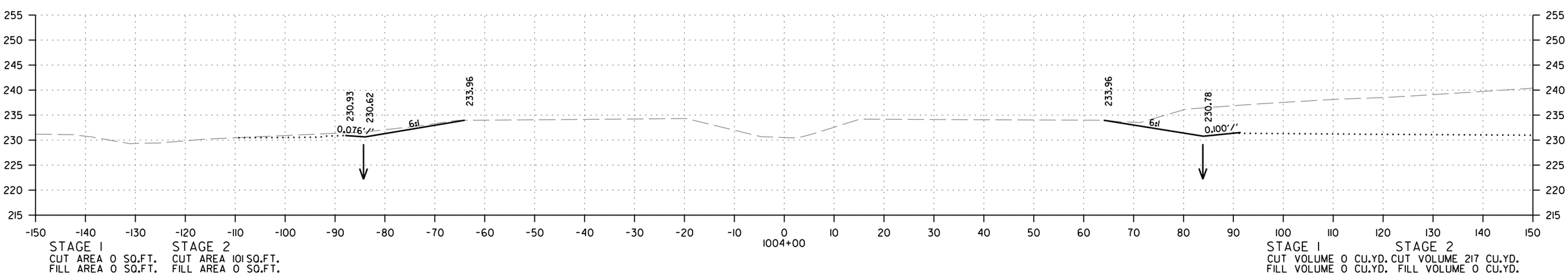

I-40 - SITE 1

STA. 1004+00 TO STA. 1006+00

MM41715 7/24/2023
R06161 3.DGN

DATE REVISED	DATE REVISED	FED.RD. DIST.NO.	STATE	JOB NO.	SHEET NO.	TOTAL SHEETS
		6	ARK.	061613	212	215
		CROSS SECTIONS				

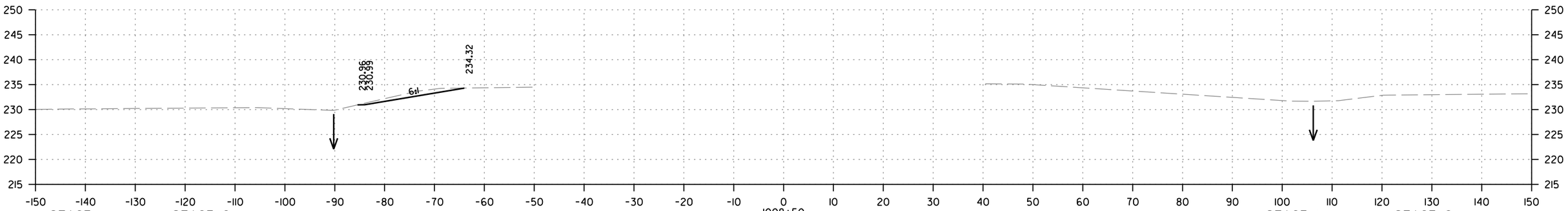

STAGE 1
CUT AREA 12 SQ.FT.
FILL AREA 0 SQ.FT.

STAGE 2
CUT AREA 0 SQ.FT.
FILL AREA 0 SQ.FT.

STAGE 1
CUT VOLUME 27 CU.YD.
FILL VOLUME 0 CU.YD.

STAGE 2
CUT VOLUME 0 CU.YD.
FILL VOLUME 0 CU.YD.

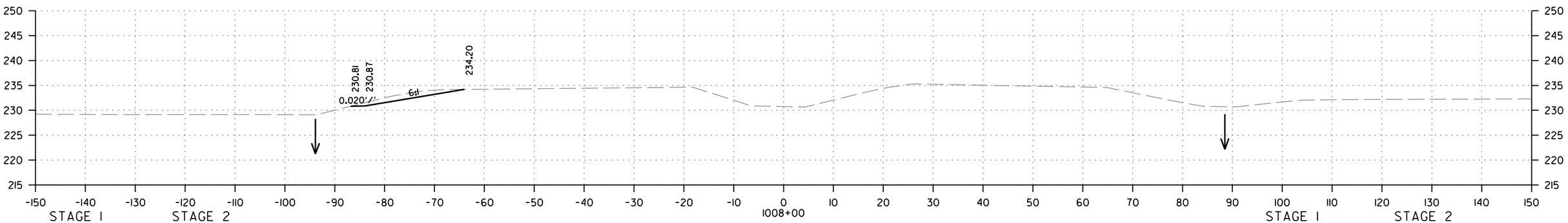

STAGE 1
CUT AREA 17 SQ.FT.
FILL AREA 0 SQ.FT.

STAGE 2
CUT AREA 0 SQ.FT.
FILL AREA 0 SQ.FT.

STAGE 1
CUT VOLUME 94 CU.YD.
FILL VOLUME 0 CU.YD.

STAGE 2
CUT VOLUME 0 CU.YD.
FILL VOLUME 0 CU.YD.

STA 1006+96 IN PLACE
D. I. IN MEDIAN
& 36" X 98' R.C. PIPE INNLET
& 36" X 102' R.C. PIPE OUTLET
WITH HDWLS LT. AND RT.
RETAIN

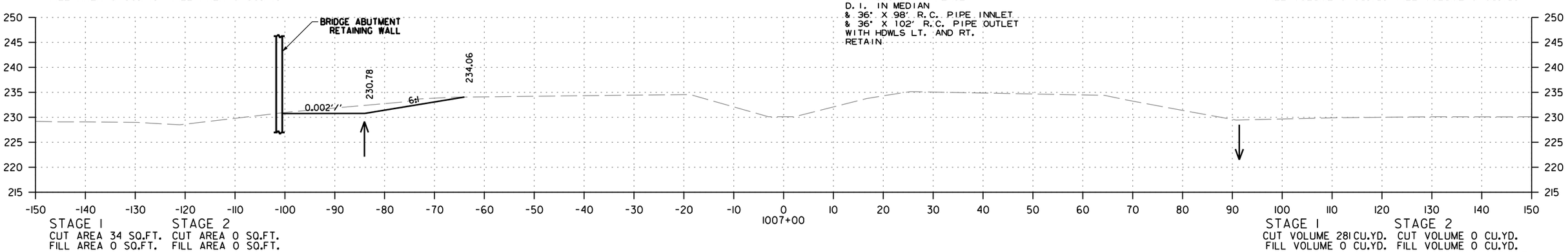

STAGE 1
CUT AREA 34 SQ.FT.
FILL AREA 0 SQ.FT.

STAGE 2
CUT AREA 0 SQ.FT.
FILL AREA 0 SQ.FT.

STAGE 1
CUT VOLUME 281 CU.YD.
FILL VOLUME 0 CU.YD.

STAGE 2
CUT VOLUME 0 CU.YD.
FILL VOLUME 0 CU.YD.

I-40 - SITE 1

STA. 1007+00 TO STA. 1008+50

MM41715 7/24/2023
R061613.DGN

DATE REVISED	DATE REVISED	FED.RD. DIST.NO.	STATE	JOB NO.	SHEET NO.	TOTAL SHEETS
		6	ARK.	061613	213	215
		CROSS SECTIONS				

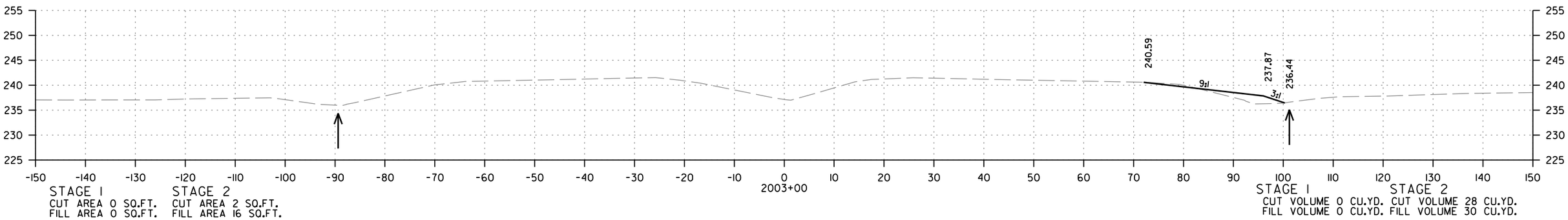

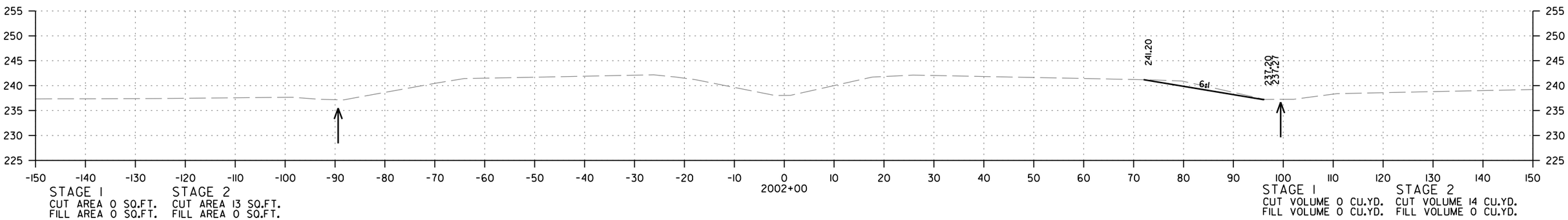

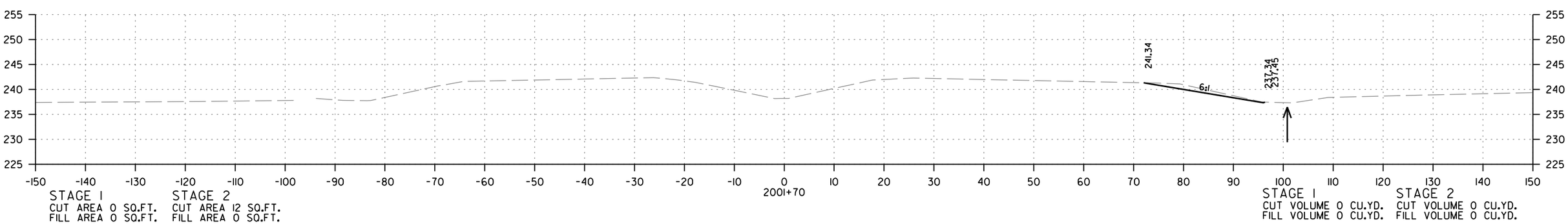

I-40 - SITE 2
STA. 2001+70 TO STA. 2003+00

MM41715 7/24/2023
R06161 3.DGN

DATE REVISED	DATE REVISED	FED.RD. DIST.NO.	STATE	JOB NO.	SHEET NO.	TOTAL SHEETS
		6	ARK.	061613	214	215
		CROSS SECTIONS				

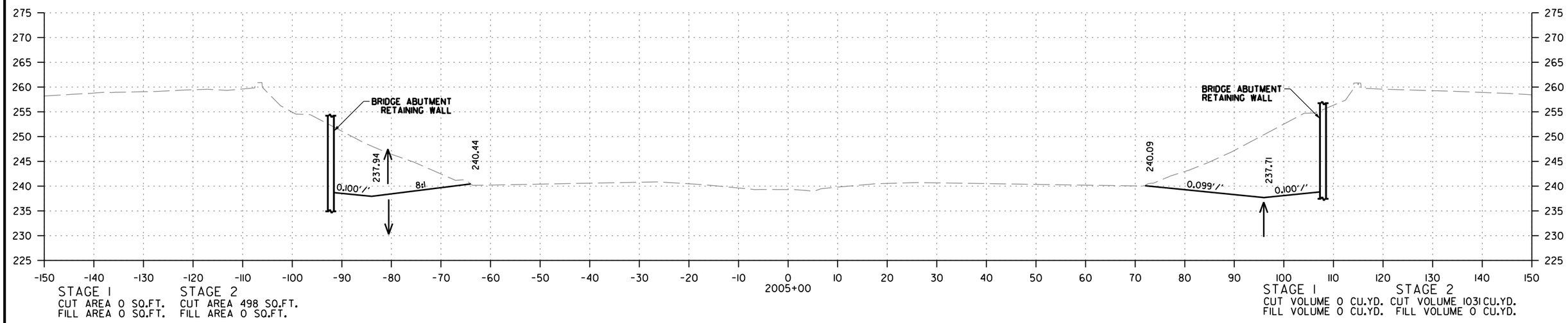

STAGE 1
CUT AREA 0 SQ.FT.
FILL AREA 0 SQ.FT.

STAGE 2
CUT AREA 498 SQ.FT.
FILL AREA 0 SQ.FT.

STAGE 1
CUT VOLUME 0 CU.YD.
FILL VOLUME 0 CU.YD.

STAGE 2
CUT VOLUME 1031 CU.YD.
FILL VOLUME 0 CU.YD.

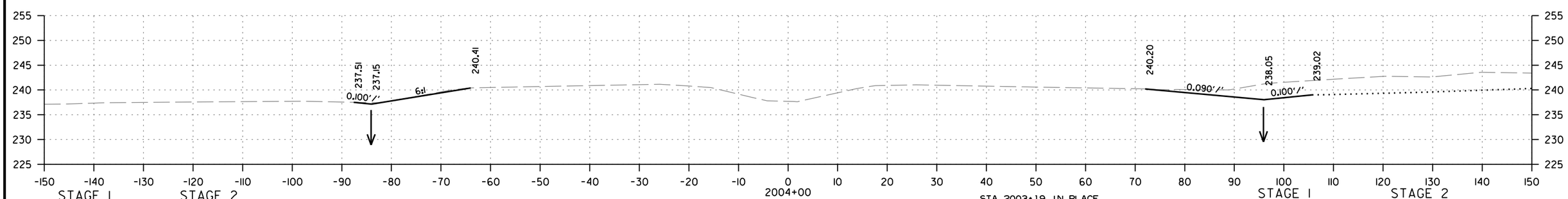

STAGE 1
CUT AREA 0 SQ.FT.
FILL AREA 0 SQ.FT.

STAGE 2
CUT AREA 59 SQ.FT.
FILL AREA 0 SQ.FT.

STA. 2003+19 IN PLACE
D. I. IN MEDIAN
& 24" X 82' R.C. PIPE OUNLET
& 24" X 87' R.C. PIPE INLET
WITH HDWLS LT. AND RT.
REMOVE HDWL RT. AND EXTEND R.C. PIPE INLET
6' RT.
FOR A COMPLETED LENGTH OF 93'
WITH FES RT.
(CLASS III)(TYPE 3 BEDDING)
24" R.C. PIPE = 10 LIN. FT.
24" F.E.S. = 1 EACH

STAGE 1
CUT VOLUME 0 CU.YD.
FILL VOLUME 0 CU.YD.

STAGE 2
CUT VOLUME 90 CU.YD.
FILL VOLUME 53 CU.YD.

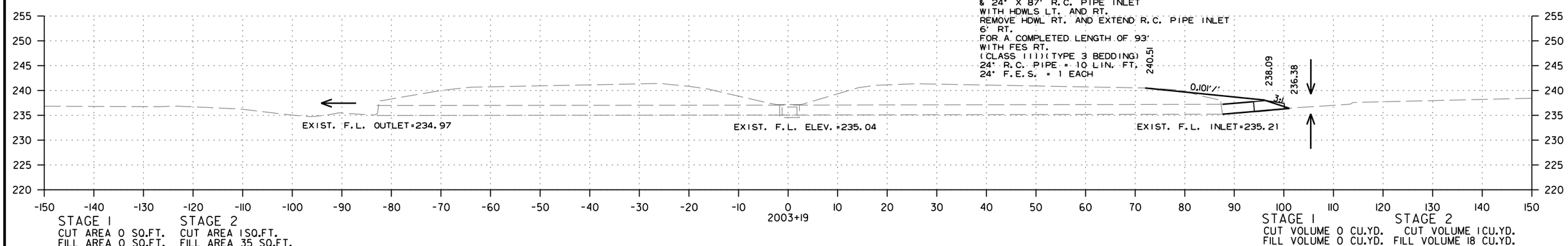

STAGE 1
CUT AREA 0 SQ.FT.
FILL AREA 0 SQ.FT.

STAGE 2
CUT AREA 1 SQ.FT.
FILL AREA 35 SQ.FT.

STAGE 1
CUT VOLUME 0 CU.YD.
FILL VOLUME 0 CU.YD.

STAGE 2
CUT VOLUME 1 CU.YD.
FILL VOLUME 18 CU.YD.

I-40 - SITE 2
STA. 2003+19 TO STA. 2005+00

MM41715 7/24/2023
R06161 3.DGN

DATE REVISED	DATE REVISED	FED.RD. DIST.NO.	STATE	JOB NO.	SHEET NO.	TOTAL SHEETS
		6	ARK.	061613	215	215
		CROSS SECTIONS				

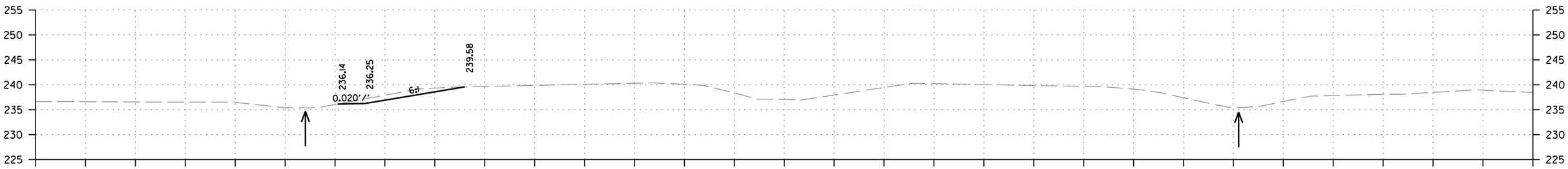

STAGE 1
CUT AREA 19 SQ.FT.
FILL AREA 0 SQ.FT.

STAGE 2
CUT AREA 0 SQ.FT.
FILL AREA 0 SQ.FT.

STAGE 1
CUT VOLUME 67 CU.YD.
FILL VOLUME 0 CU.YD.

STAGE 2
CUT VOLUME 0 CU.YD.
FILL VOLUME 0 CU.YD.

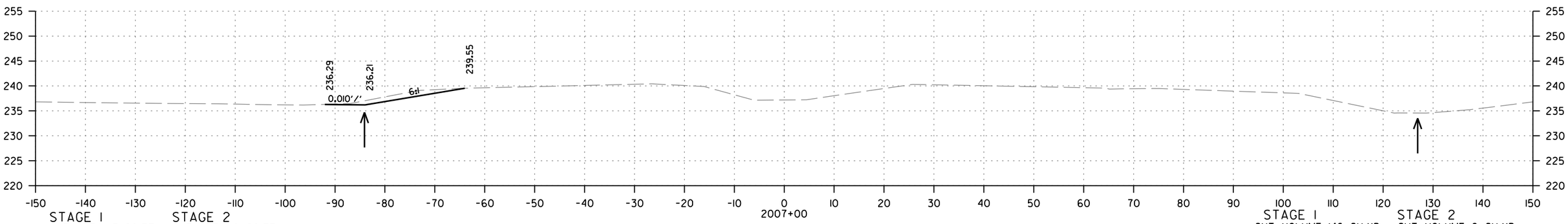

STAGE 1
CUT AREA 17 SQ.FT.
FILL AREA 0 SQ.FT.

STAGE 2
CUT AREA 0 SQ.FT.
FILL AREA 0 SQ.FT.

STAGE 1
CUT VOLUME 146 CU.YD.
FILL VOLUME 9 CU.YD.

STAGE 2
CUT VOLUME 0 CU.YD.
FILL VOLUME 0 CU.YD.

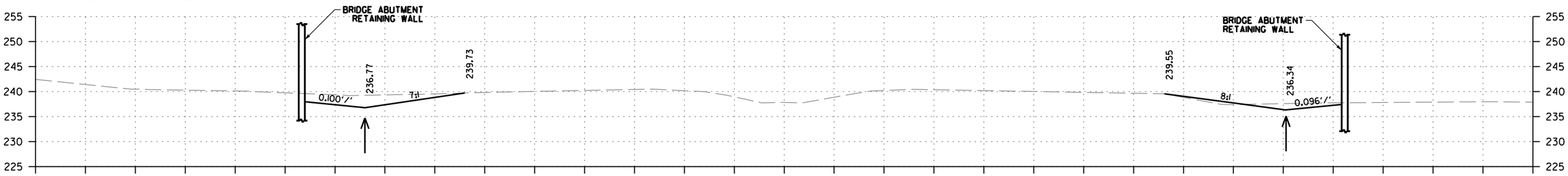

STAGE 1
CUT AREA 62 SQ.FT.
FILL AREA 5 SQ.FT.

STAGE 2
CUT AREA 0 SQ.FT.
FILL AREA 0 SQ.FT.

STAGE 1
CUT VOLUME 115 CU.YD.
FILL VOLUME 9 CU.YD.

STAGE 2
CUT VOLUME 922 CU.YD.
FILL VOLUME 0 CU.YD.

I-40 - SITE 2
STA. 2006+00 TO STA. 2008+00

MM41715 7/24/2023
R06161 3.DGN

DATE REVISED	DATE FILMED	DATE REVISED	DATE FILMED	FED. ROAD DIST. NO.	STATE	FED. AID PROJ. NO.	SHEET NO.	TOTAL SHEETS
				6	ARK.			
				JOB NO.				
				1	EMBANKMENT & BACKFILL		55000	

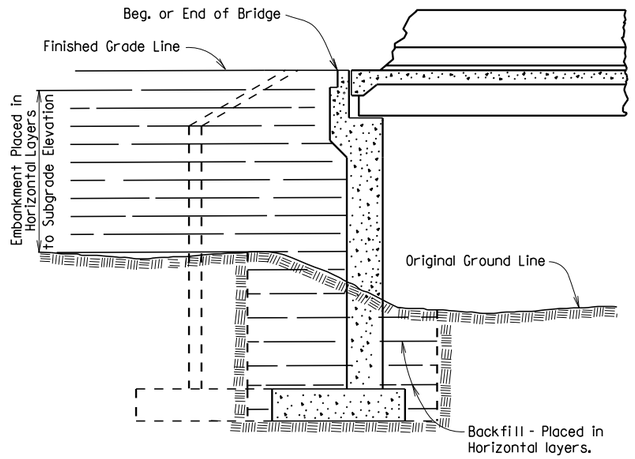

EMBANKMENT CONSTRUCTION AND FOOTING BACKFILL AT VERTICAL WALL ABUTMENTS

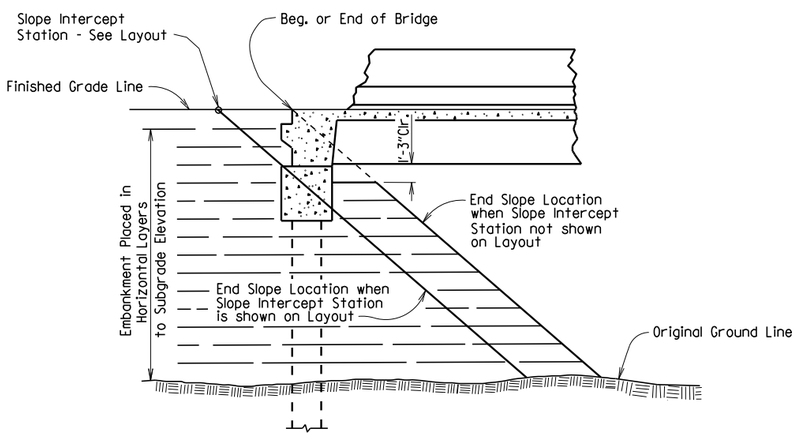

EMBANKMENT CONSTRUCTION AT SPILL-THROUGH PILE END BENTS

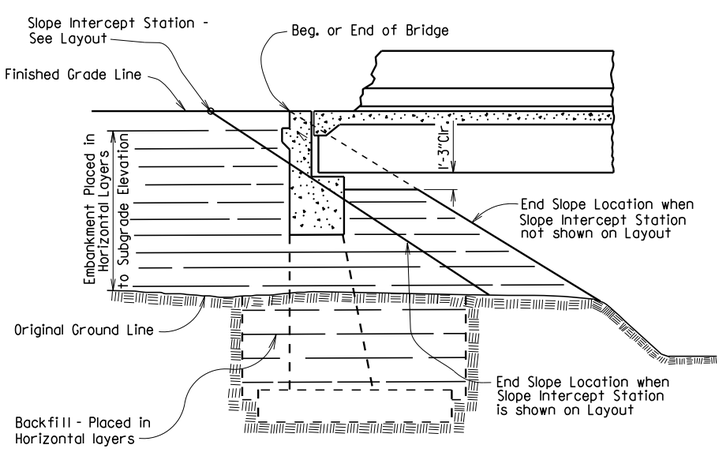

EMBANKMENT CONSTRUCTION AND FOOTING BACKFILL AT SPILL-THROUGH END BENTS

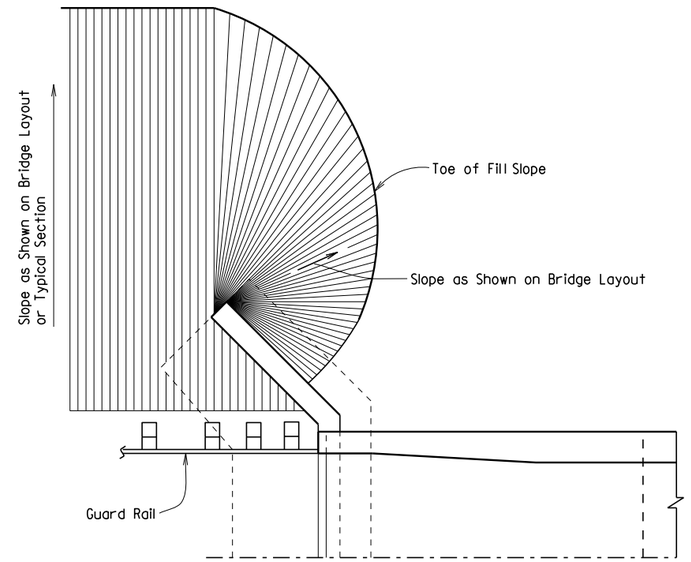

VERTICAL WALL ABUTMENTS

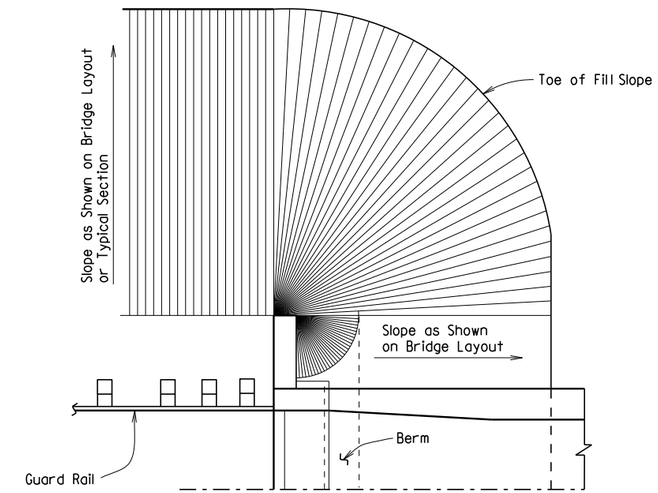

SPILL-THROUGH END BENTS WITH STUB WING

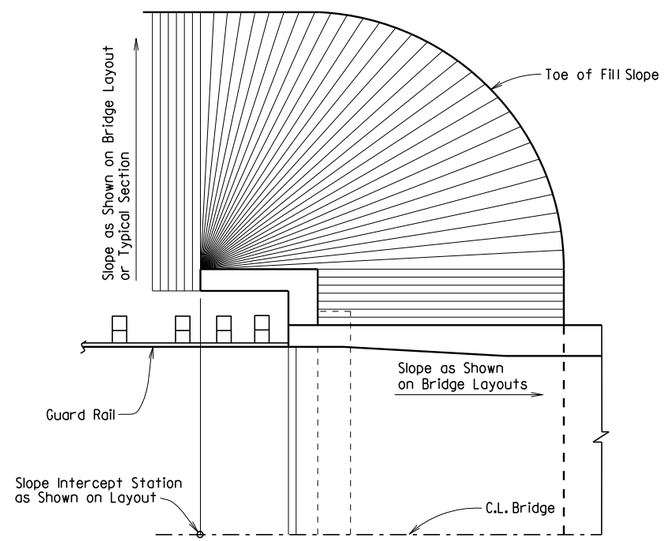

SPILL-THROUGH END BENTS WITH TURNBACK WING

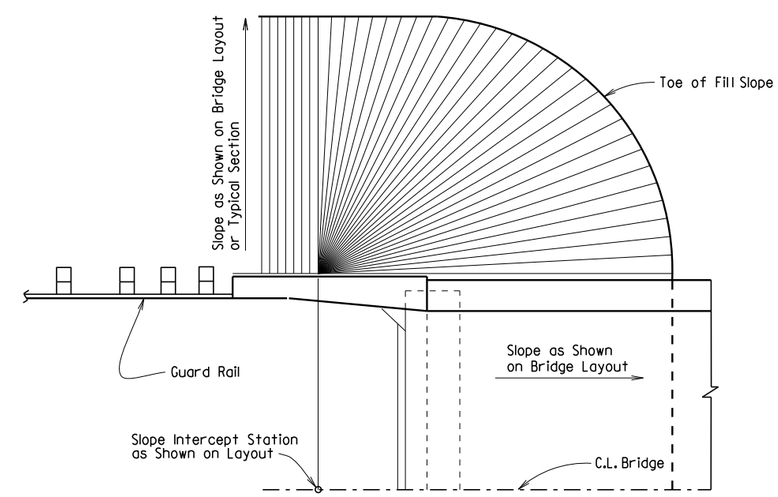

SPILL-THROUGH END BENTS WITH TRANSITION WING

METHOD OF DETERMINING FILL SLOPE LOCATION AT BRIDGE ENDS

GENERAL NOTES

The Bridge End Embankment shall be defined as a section of embankment, not less than 20 feet long adjacent to the bridge end, together with the side slopes and slopes under the bridge end including around the end of wingwalls. Embankment adjacent to structures shall be constructed in 6 inch horizontal layers (loose measure) and compacted by the use of mechanical equipment to the satisfaction of the Engineer. Refer to Subsections 210.09, 210.10 and 801.08 for construction requirements.

STANDARD DETAILS FOR EMBANKMENT CONSTRUCTION AND BACKFILL AT BRIDGE ENDS

ARKANSAS STATE HIGHWAY COMMISSION

LITTLE ROCK, ARK.

DRAWN BY:	KDH	DATE:	2-27-2014	FILENAME:	b55000.dgn
CHECKED BY:	BEF	DATE:	2-27-2014	SCALE:	NO SCALE
DESIGNED BY:	STD.	DATE:	-		

DRAWING NO. 55000

DATE REVISED	DATE FILMED	DATE REVISED	DATE FILMED	FED. ROAD DIST. NO.	STATE	FED. AID PROJ. NO.	SHEET NO.	TOTAL SHEETS
				6	ARK.			
				JOB NO.				
				1	RIPRAP & EXCAV. 55001			

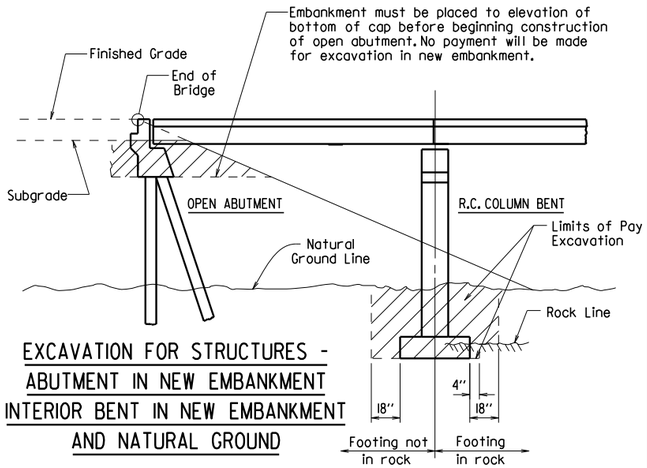

EXCAVATION FOR STRUCTURES - ABUTMENT IN NEW EMBANKMENT INTERIOR BENT IN NEW EMBANKMENT AND NATURAL GROUND

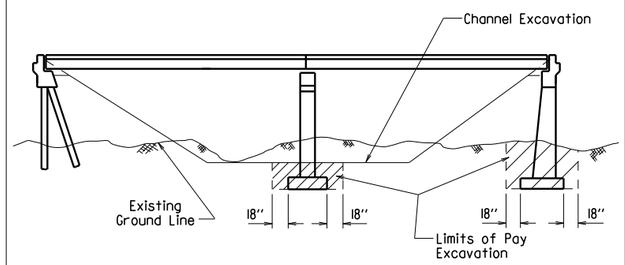

EXCAVATION FOR STRUCTURES - BRIDGE LOCATION WITH DESIGNATED CHANNEL CHANGE

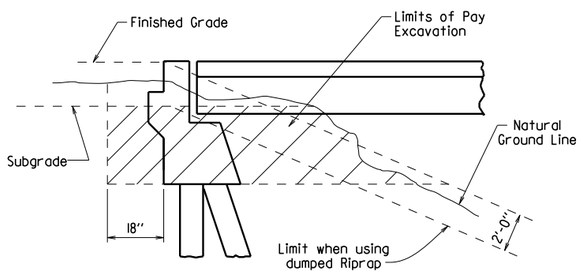

EXCAVATION FOR STRUCTURES - ABUTMENT IN NATURAL GROUND

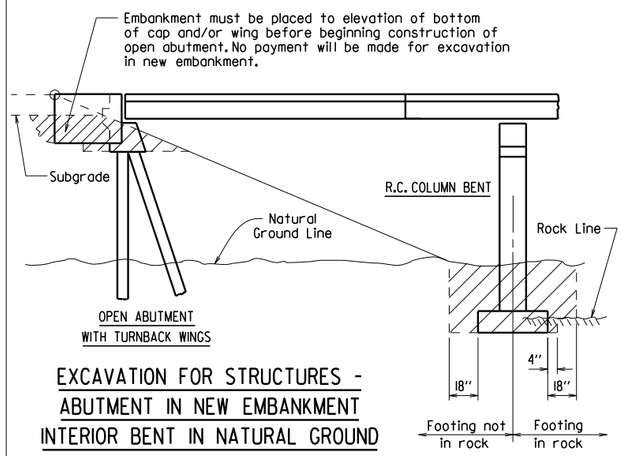

EXCAVATION FOR STRUCTURES - ABUTMENT IN NEW EMBANKMENT INTERIOR BENT IN NATURAL GROUND

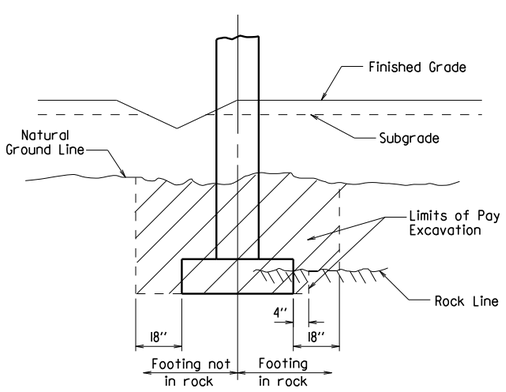

EXCAVATION FOR STRUCTURES - BENT IN ROADWAY FILL SECTION AND NATURAL GROUND

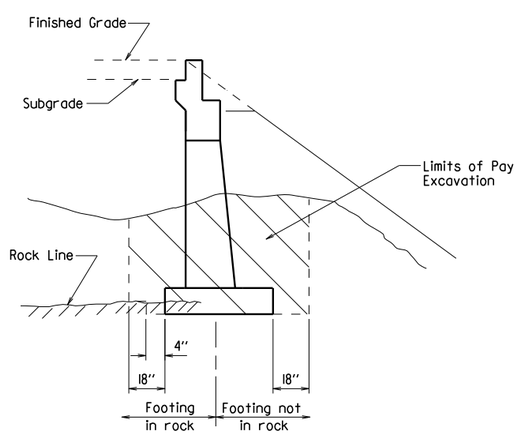

EXCAVATION FOR STRUCTURES - ABUTMENT IN NATURAL GROUND AND NEW EMBANKMENT

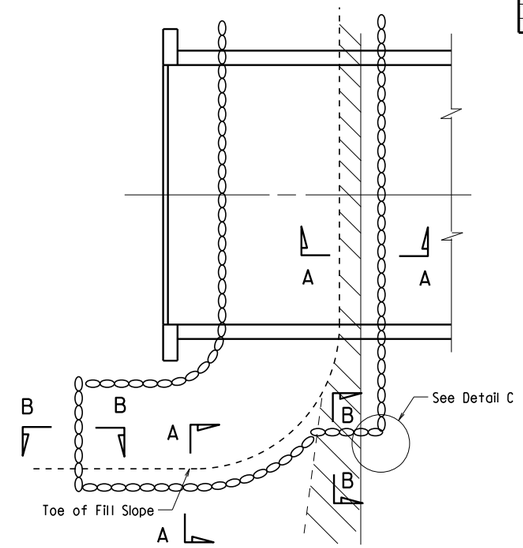

PLAN OF DUMPED RIPRAP

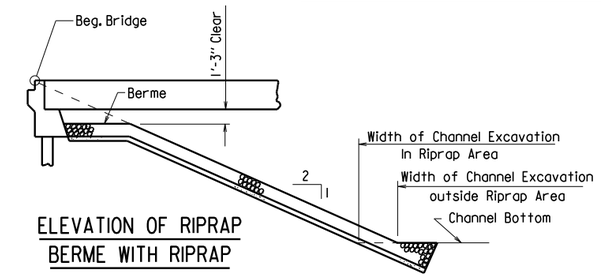

ELEVATION OF RIPRAP BERME WITH RIPRAP

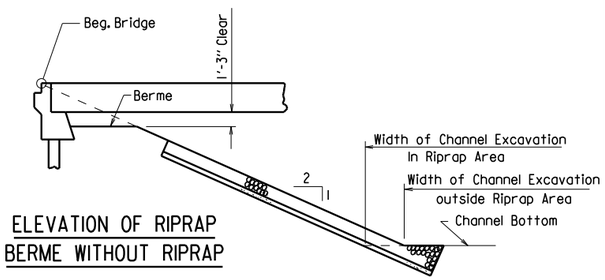

ELEVATION OF RIPRAP BERME WITHOUT RIPRAP

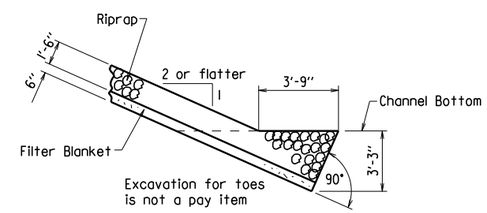

SECTION A-A

(Toe Excavation in Soil)

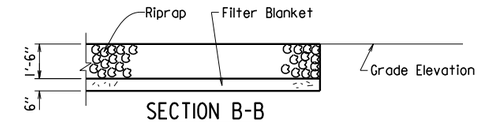

SECTION B-B

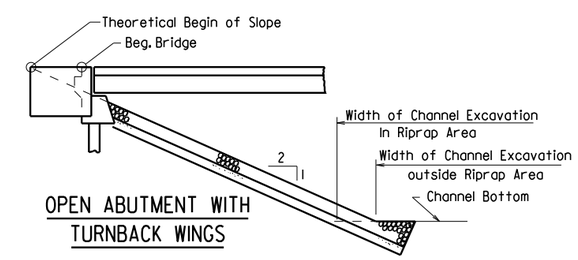

OPEN ABUTMENT WITH TURNBACK WINGS

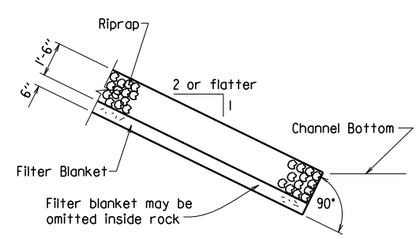

SECTION A-A

(Toe Excavation in Rock)

Note : Use this type of toe when rock is encountered which is in a stable condition.

Note : In lieu of an aggregate filter blanket, a synthetic fiber geotextile fabric complying with the requirements of Subsection 816.02(e) may be used.

Note : Details for computing excavation for structures are included for information as to how plan quantities were calculated and for use when adjusting quantities when changing footing elevation.

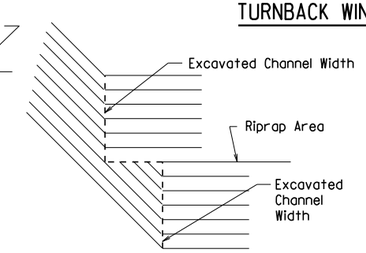

DETAIL C

STANDARD DETAILS FOR DUMPED RIPRAP AND FILTER BLANKET AND COMPUTING EXCAVATION FOR STRUCTURES

ARKANSAS STATE HIGHWAY COMMISSION

LITTLE ROCK, ARK.

DRAWN BY:	KDH	DATE:	2-27-2014	FILENAME:	b55001.dgn
CHECKED BY:	BEF	DATE:	2-27-2014	SCALE:	NO SCALE
DESIGNED BY:	STD.	DATE:			

DRAWING NO. 55001

DATE REVISED	DATE FILMED	DATE REVISED	DATE FILMED	FED. ROAD DIST. NO.	STATE	FED. AID PROJ. NO.	SHEET NO.	TOTAL SHEETS
				6	ARK.			
				JOB NO.				
				1	CONCRETE RIPRAP 55002			

Note:
Sloped surfaces of concrete riprap to be marked off into blocks (construction joints optional) with an approved grooving tool, spacing the grooved lines about 5' apart.

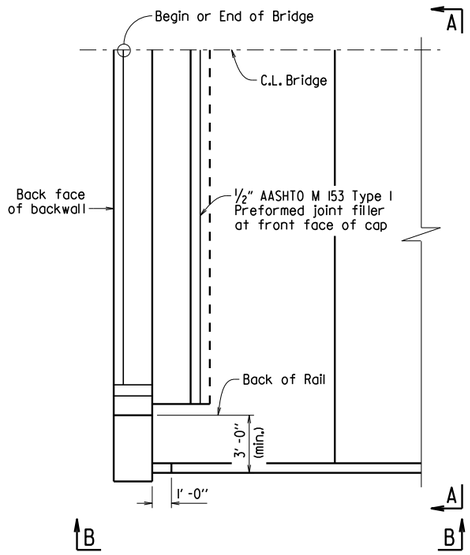

PLAN OF CONCRETE RIPRAP PERPENDICULAR TO WING
1/4" = 1'-0"

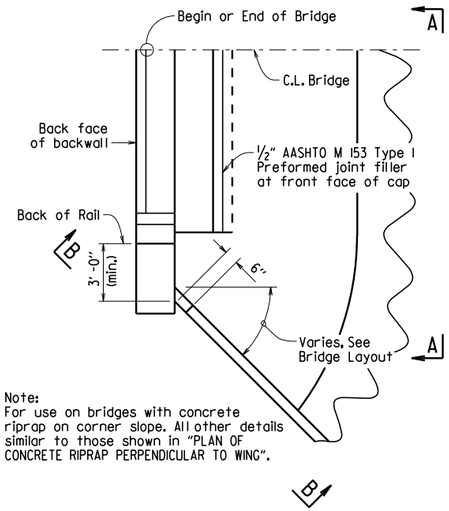

Note:
For use on bridges with concrete riprap on corner slope. All other details similar to those shown in "PLAN OF CONCRETE RIPRAP PERPENDICULAR TO WING".

PLAN OF CONCRETE RIPRAP AT ANGLE TO WING
1/4" = 1'-0"

Note:
For use on bridges with turned back wings. All other details similar to those shown in "PLAN OF CONCRETE RIPRAP PERPENDICULAR TO WING".

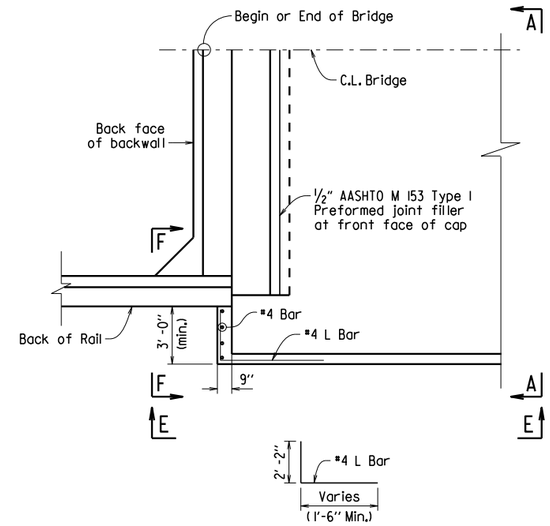

PLAN OF CONCRETE RIPRAP PERPENDICULAR TO TURNED BACK WING
1/4" = 1'-0"

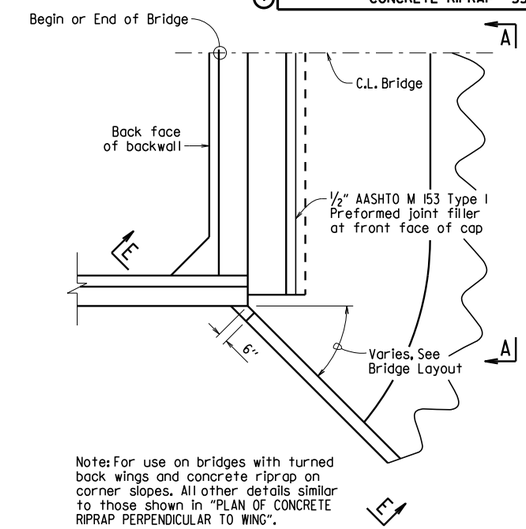

Note: For use on bridges with turned back wings and concrete riprap on corner slopes. All other details similar to those shown in "PLAN OF CONCRETE RIPRAP PERPENDICULAR TO WING".

PLAN OF CONCRETE RIPRAP AT ANGLE FROM TURNED BACK WING
1/4" = 1'-0"

Note:
Wing is shown perpendicular to concrete riprap. Details are similar when wing is at an angle to riprap.

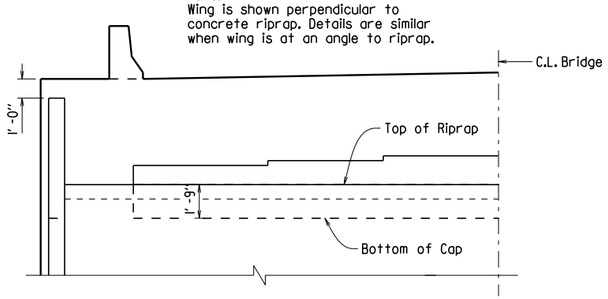

VIEW A-A
1/4" = 1'-0"

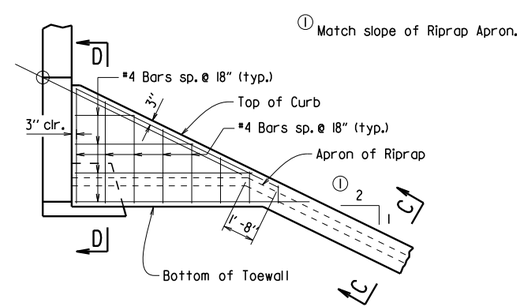

VIEW B-B
1/4" = 1'-0"

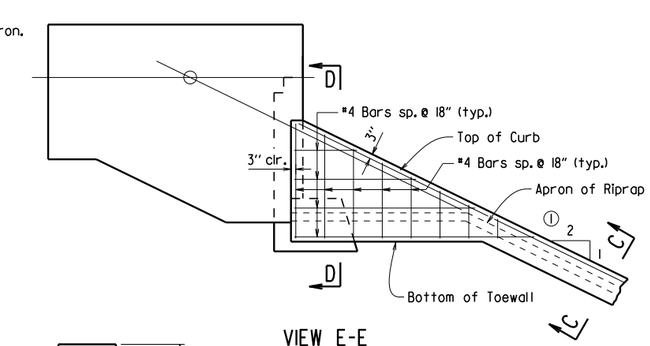

VIEW E-E
1/4" = 1'-0"

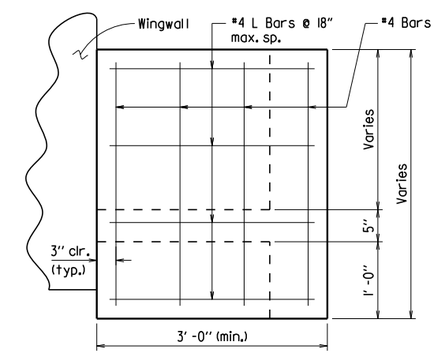

VIEW F-F
1" = 1'-0"

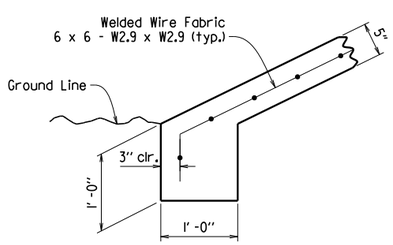

TOE OF CONCRETE RIPRAP
1" = 1'-0"

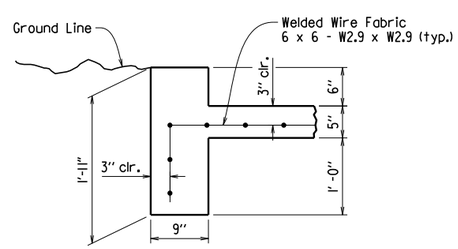

SECTION C-C
1" = 1'-0"

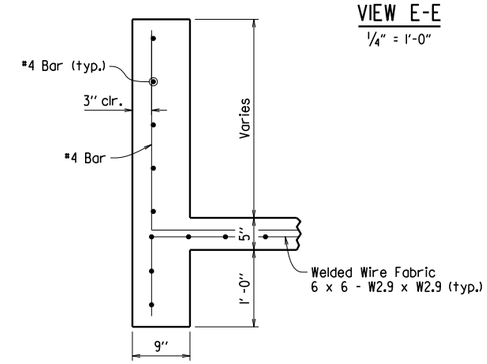

SECTION D-D
1" = 1'-0"

GENERAL NOTES

All concrete shall be Class A with a minimum compressive strength, f'c = 2,100 psi.

Welded wire fabric shall conform to AASHTO M55 or M221.

STANDARD DETAILS FOR CONCRETE RIPRAP

ARKANSAS STATE HIGHWAY COMMISSION

LITTLE ROCK, ARK.

DRAWN BY:	ACP	DATE:	2/27/2014	FILENAME:	b55002.dgn
CHECKED BY:	BEF	DATE:	2/27/2014	SCALE:	AS SHOWN
DESIGNED BY:	Std.	DATE:	---		

DRAWING NO. 55002

DATE REVISED	DATE FILMED	DATE REVISED	DATE FILMED	FED. ROAD DIST. NO.	STATE	FED. AID PROJ. NO.	SHEET NO.	TOTAL SHEETS
3/24/16				6	ARK.			
				JOB NO.				
				① BRIDGE DECK FORMS			55005	

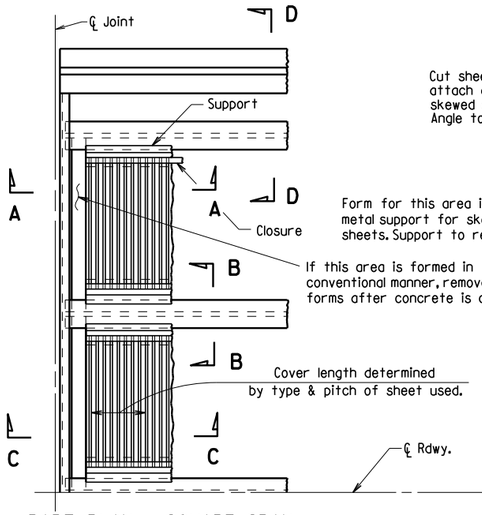

PART PLAN - SQUARE SPAN

3/8" = 1'-0"

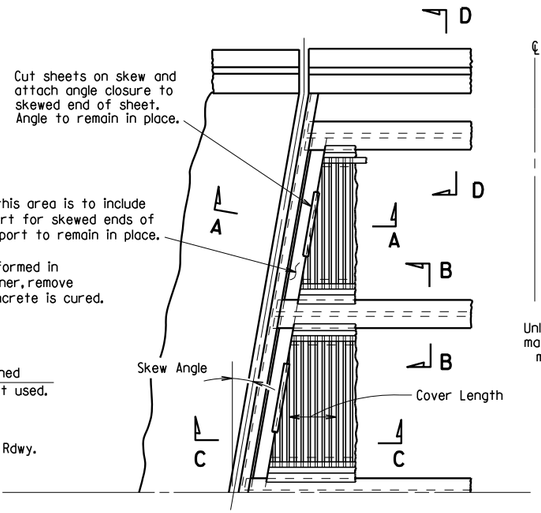

PART PLAN - SKEWED SPAN

3/8" = 1'-0"

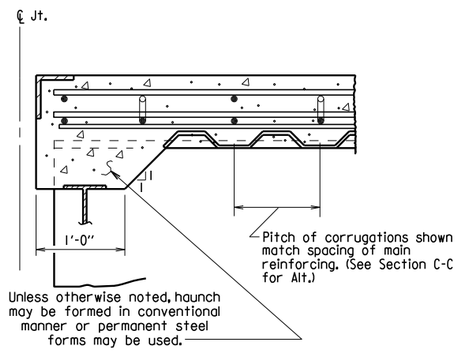

SECTION A-A

N.T.S.
(Angle at end of span)

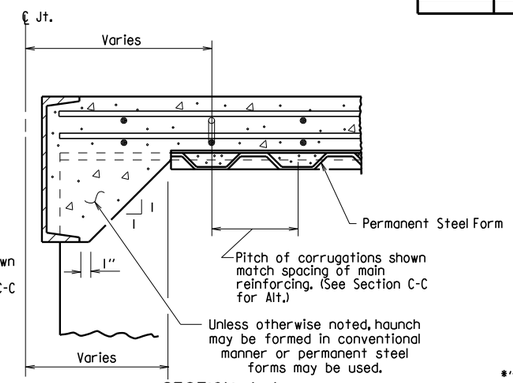

SECTION A-A

N.T.S.
(Channel at end of span)

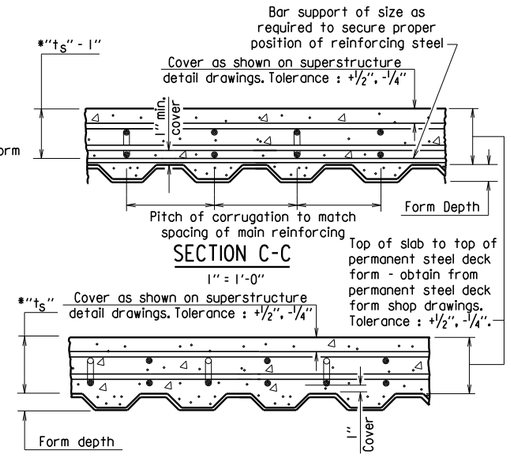

SECTION C-C

1" = 1'-0"

SECTION C-C - ALTERNATE

1" = 1'-0"
(Applicable when corrugations do not match spacing of main reinforcement)

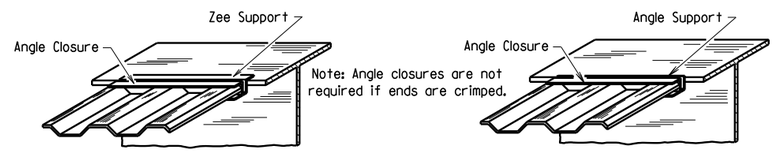

SKETCH OF PERMISSIBLE SUPPORTS

N.T.S.

$*t_s$ = slab thickness as shown on superstructure detail drawings.

GENERAL NOTES

Permanent steel deck forms may be used at the Contractor's option and shall be at no additional cost to the Department. Such use may result in changes to the dead load deflection of the girder. Any cost for adjustments due to a change in the dead load deflection will be borne by the Contractor. Payment for deck concrete and structural steel will not be increased due to use of permanent steel deck forms.

Permanent steel deck forms shall conform to Subsection 802.14(b). Detailed plans, including detailed calculations and manufacturer's technical brochure, shall be submitted to and approved by the Engineer before work of forming the bridge deck is started.

Welding of form supports to the tension flange of steel girders will be permitted only in areas where shear connectors are used. When welding is not allowed, the method of fastening Z or ∠ supports to the flange must be approved by the Engineer.

Form sheets shall be fastened to supporting members and to each other with galvanized metal screws sufficient in size and number to provide a secure attachment. Alternate methods of attachment must be approved by the Engineer.

When the pitch of form corrugations match the reinforcing spacing, transversely align form sheets across the bridge to maintain the correct orientation of continuous reinforcing bars in the corrugations.

Bar support rods, when used, shall be sized and spaced to adequately support the bottom reinforcing mat at the required position.

High chairs shall be sized to support the top mat of reinforcing at the proper position. High chairs shall be placed at locations shown on the detail drawings.

Specifications: Arkansas State Highway and Transportation Department Standard Specifications for Highway Construction (2014 Edition), with applicable Supplemental Specifications and Special Provisions.

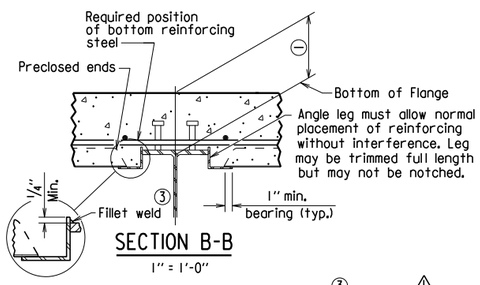

SECTION B-B

1" = 1'-0"
(Showing permissible support for tension flange where shear connectors are used, and for all compression flanges)

③ ⚠ Minimum weld: 1/8" x 1" @ 18". More weld may be required; maximum length per weld = 1 1/2" (typ.)

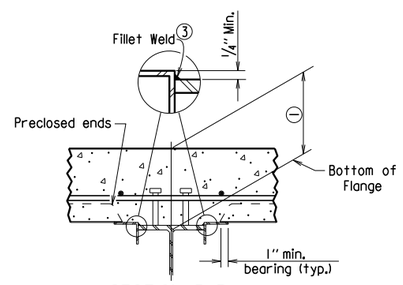

SECTION B-B

1" = 1'-0"
(Showing permissible support for tension flange where shear connectors are used and for all compression flanges)

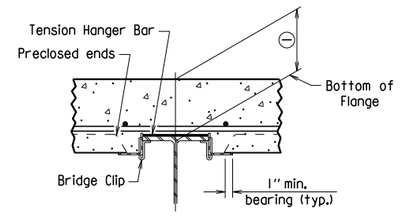

SECTION B-B

1" = 1'-0"
(Showing permissible support for tension flange where shear connectors are not used)

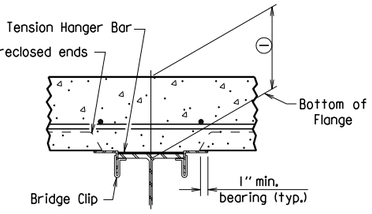

SECTION B-B

1" = 1'-0"
(Showing permissible support for tension flange where shear connectors are not used)

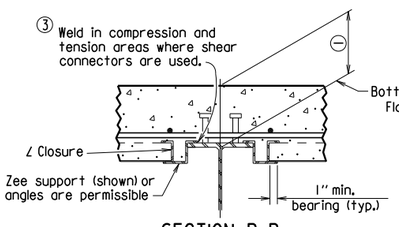

SECTION B-B

1" = 1'-0"
(Showing ∠ Closure)

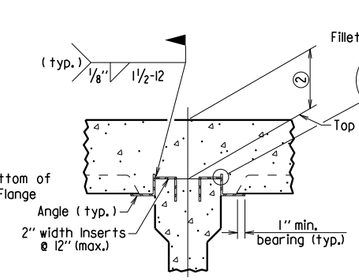

SECTION B-B
(FOR CONCRETE GIRDERS)

1" = 1'-0"
(Showing support by Insert cast in girder)

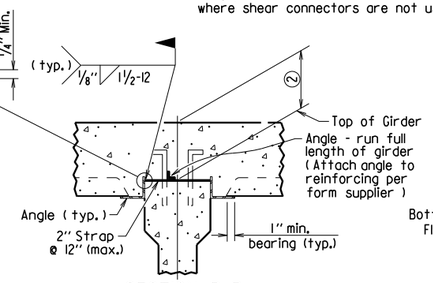

SECTION B-B
(FOR CONCRETE GIRDERS)

1" = 1'-0"
(Showing support by Strap)

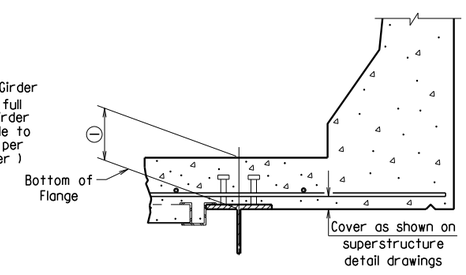

SECTION D-D

1" = 1'-0"
Note: Only Bottom Reinforcing is shown.

① Distance from top of slab to bottom of top flange as measured at centerline girder and as shown on superstructure detail drawings. This dimension may vary within the following limits to maintain the grade and slab thickness tolerances : Minimum - occurs when either the top flange or the support angle leg contacts the bottom reinforcing steel; Maximum = t_s + 1 3/4" + flange thickness. See Section C-C for slab thickness tolerance between adjacent girder flanges.

② Distance from top of slab to top of girder as measured at centerline girder and as shown on superstructure detail drawings. This dimension may vary within the following limits to maintain the grade and slab thickness tolerances : Minimum - occurs when either the top of girder or the support angle leg contacts the bottom reinforcing steel; Maximum - value shown on the superstructure detail drawings when removable forms are used. See Section C-C for slab thickness tolerance between adjacent girder flanges.

⚠ Revised weld dimension by KWY, Ck'd. by BEF, 3/24/16.

STANDARD DETAILS FOR PERMANENT STEEL BRIDGE DECK FORMS FOR STEEL & CONCRETE GIRDER SPANS

ARKANSAS STATE HIGHWAY COMMISSION

LITTLE ROCK, ARK.

DRAWN BY:	KDH	DATE:	2-27-2014	FILENAME:	b55005.dgn
CHECKED BY:	BEF	DATE:	2-27-2014	SCALE:	NONE
DESIGNED BY:	STD.	DATE:	—		

DRAWING NO. 55005

DATE REVISED	DATE FILMED	DATE REVISED	DATE FILMED	FED. ROAD DIST. NO.	STATE	FED. AID PROJ. NO.	SHEET NO.	TOTAL SHEETS
				6	ARK.			
				JOB NO.				
				1		GENERAL NOTES	55006	

GENERAL NOTES

These GENERAL NOTES are applicable unless otherwise shown in the Plan Details, Special Provisions, or Supplemental Specifications.

CONSTRUCTION SPECIFICATIONS: Arkansas State Highway and Transportation Department Standard Specifications for Highway Construction (2014 Edition) with applicable Supplemental Specifications and Special Provisions. Section and Subsection refer to the Standard Specifications.

DESIGN SPECIFICATIONS: See Bridge Layout(s).

SUPERSTRUCTURE NOTES:

MATERIALS AND STRENGTHS:

Class S(AE) Concrete	f'c =	4,000 psi
Reinforcing Steel (Gr. 60, AASHTO M 31 or M 322, Type A)	fy =	60,000 psi
Structural Steel (AASHTO M 270, Gr. 36)	Fy =	36,000 psi
Structural Steel (AASHTO M 270, Gr. 50)	Fy =	50,000 psi
Structural Steel (AASHTO M 270, Gr. 50W)	Fy =	50,000 psi
Structural Steel (AASHTO M 270, Gr. HPS70W)	Fy =	70,000 psi

See Plan Details for Grade(s) of Structural Steel required.

CONCRETE:

All concrete shall be Class S(AE) with a minimum 28 day compressive strength f'c = 4,000 psi. Concrete shall be poured in the dry and all exposed corners shall be chamfered 3/4" unless otherwise noted.

The superstructure details shown are for use when removable deck forming is used and are the basis for measurement of Class S(AE) Concrete. See Standard Drawing No. 55005 for allowable modifications and for tolerances when Permanent Steel Bridge Deck Forms are used.

Use of a longitudinal screed is not permitted on any span of a bridge deck with horizontal curvature.

The concrete deck (roadway surface) shall be given a tine finish in accordance with Subsection 802.19 for Class 5 Tined Bridge Roadway Surface Finish. Sidewalks shall receive a broomed finish as specified for final finishing in Subsection 802.19 for Class 6 Broomed Finish. Movement of the finishing machine across new concrete shall be on planks placed on the surface and shall be prohibited for 72 hours after finishing the pour. Sufficient concrete must be placed ahead of the strike-off to fully load the beam or girder. When permitted, the use of a longitudinal strike-off will require that a vertical camber adjustment be made in the strike-off to account for the future dead load deflection due to any railings, median barrier, and sidewalks.

REINFORCING STEEL:

All reinforcing steel shall be Grade 60 conforming to AASHTO M 31 or M 322, Type A, with mill test reports and shall be epoxy coated. The reinforcing steel is to be accurately located in the forms and firmly held in place by steel wire supports, sufficient in number and size to prevent displacement during the course of construction. The wire supports will not be paid for directly, but will be considered subsidiary to the item "Epoxy Coated Reinforcing Steel (Grade 60)".

STRUCTURAL STEEL (COMMON TO W-BEAMS AND PLATE GIRDERS):

Structural steel shall be AASHTO M 270 with grade and payment as specified in the plans. Grade 50W steel shall not be painted and all exposed surfaces shall be cleaned in accordance with Subsection 807.84(e). Grade 36 and Grade 50 steel shall be painted unless otherwise noted and all exposed surfaces shall be cleaned in accordance with Subsection 807.84. Structural steel completely embedded in concrete may be AASHTO M 270, Gr. 36, Gr. 50 or Gr. 50W unless otherwise noted.

Drawings show general features of design only. Shop drawings shall be made in accordance with the specifications, submitted and approval secured before fabrication is begun.

Requests for substitution of structural steel shapes shown with shapes of greater size must be submitted by the Contractor to the Engineer for approval. Steels of equal or greater strengths will be accepted only when shown on the approved shop drawings. Payment will be based on the basis of shapes and materials shown in the plans, and no additional compensation will be made for any adjustments due to substitutions.

All welding that is to be done during fabrication of structural steel, including temporary welds, shall be detailed on the shop drawings and submitted for approval. If additional welds are required, whether permanent or temporary, a formal request with detailed drawings shall be submitted to the Engineer for approval; however, additional welds used for attaching falsework support devices or screed rail supports to the structural steel that do not exceed the limitations of Subsection 802.13 will not require approval prior to construction. All welding shall conform to Subsection 807.26.

Unless otherwise noted, field connections shall be bolted with 3/4" ø high-strength bolts using 13/16" ø open holes. Holes for 3/4" ø high-strength bolts may be 15/16" ø if a washer is supplied for use under both the nut and head of the bolt. The use of oversized holes will not be allowed on main members unless otherwise noted. Bolts shall be placed with heads on the outside face of the exterior beam or girder webs and on the bottom of the beam or girder flanges.

All stud shear connectors shall be granular flux filled, solid fluxed, or equal and shall be automatically end welded in accordance with recommendations of the Manufacturer.

When painting is required, all structural steel except galvanized steel and steel completely encased in concrete shall be painted in accordance with Subsection 807.75. The color of paint shall be as specified in the plans.

STRUCTURAL STEEL (W-BEAMS):

All beams and field splice plates, and all diaphragms and connection plates attached to horizontally curved beams are considered main load carrying members and shall meet the Longitudinal Charpy V-Notch Test specified in Subsection 807.05. This work and material will not be paid for directly, but shall be considered subsidiary to the item "Structural Steel in Beam Spans (M 270, Gr. ___)".

All beams in continuous units and simple spans with field splices shall be blocked in their true position in the shop in groups as specified in Subsection 807.54(b)(2) with the webs horizontal. The camber, length of sections, distance between bearings, and openings of joints shall be measured and this information shall become part of the permanent records. The component parts shall be match marked in this assembly and these marks shall be shown on the erection diagram.

All beams in simple spans without field splices shall be blocked in their true position with webs horizontal. The camber, distance between bearings, and openings of joints shall be measured and this information shall become part of the permanent records.

Flange field splice plates shall be cut and fabricated so that the primary direction of rolling is parallel to the direction of the main tensile and/or compressive stresses.

All beam dimensions are based on a temperature of 60 degrees F. A tolerance of 1/4" +/- is allowed for camber.

Bent plate diaphragms for horizontally curved beams shall be cut and fabricated so that the primary direction of rolling is parallel to the direction of the main tensile and/or compressive stresses. Bent plate diaphragms for straight beams may be cut and fabricated in accordance with Subsection 807.35 or as required for horizontally curved beams.

Unless otherwise noted, diaphragms shall be installed as beams are erected. All bolts in diaphragms and field splices shall be installed and tightened in accordance with Subsection 807.71 prior to pouring the concrete deck.

STRUCTURAL STEEL (PLATE GIRDERS):

All references to cross-frames shall include "X" or "K" types.

All girder web and flange plates, all field splice plates, and all diaphragms, cross-frames and connection plates attached to horizontally curved girders are considered main load carrying members and shall meet the Longitudinal Charpy V-Notch Test specified in Subsection 807.05. This work and material will not be paid for directly, but shall be considered subsidiary to the item "Structural Steel in Plate Girder Spans (M 270, Gr. ___)".

All girders in continuous units and simple spans with field splices shall be assembled in the shop as specified in Subsection 807.54(b)(2) and blocked in their true position with webs horizontal. The camber, length of sections, distance between bearings, and openings of joints shall be measured and this information shall become part of the permanent records. The component parts shall be match marked in this assembly and these marks shall be shown on the erection diagram.

All girders in simple spans without field splices shall be blocked in their true position with webs horizontal. The camber, distance between bearings, and openings of joints shall be measured and this information shall become part of the permanent records.

Web and flange plates for main members and flange splice plates for main members shall be cut and fabricated so that the primary direction of rolling is parallel to the direction of the main tensile and/or compressive stresses.

Girder webs may be made by shop splicing with minimum lengths of 25 feet for sections. Flange plates longer than 50 feet may be made by shop splicing with minimum lengths of 25 feet for sections. No additional payment will be made for shop welded splices.

All girder dimensions are based on a temperature of 60 degrees F. A tolerance of 1/4" +/- is allowed for camber.

Groove welds in web and flange plates shall be Quality Control (Q.C.) tested by nondestructive testing, as required in Subsection 807.23(b). Fillet welds at flange to web plate connections shall be Q.C. tested by the magnetic particle method. All Q.C. testing shall be considered subsidiary to the item "Structural Steel in Plate Girder Spans (M 270, Gr. ___)".

Bent plate diaphragms for horizontally curved girders shall be cut and fabricated so that the primary direction of rolling is parallel to the direction of the main tensile and/or compressive stresses. Bent plate diaphragms for straight girders may be cut and fabricated in accordance with Subsection 807.35 or as required for horizontally curved girders.

Unless otherwise noted, cross-frames and diaphragms shall be installed as girders are erected. All bolts in cross-frames, diaphragms, and field splices shall be installed and tightened in accordance with Subsection 807.71 prior to pouring the concrete deck.

SUBSTRUCTURE NOTES:

CONCRETE:

Unless otherwise noted, concrete in caps, columns and footings (except seal footings) shall be Class "S" with a minimum 28 day compressive strength f'c = 3,500 psi and shall be poured in the dry. Seal Concrete for footings shall have a minimum 28 day compressive strength f'c = 2,100 psi.

Concrete in drilled shafts shall be Class "S" as modified by Job SP "Drilled Shaft Foundations".

All exposed corners shall be chamfered 3/4" unless otherwise noted.

REINFORCING STEEL:

All reinforcing steel shall be Grade 60 (yield strength = 60,000 psi) conforming to AASHTO M 31 or M 322, Type A, with mill test reports.

Top reinforcing bars in cap shall be properly placed to avoid interference with anchor bolts or sheet metal sleeves.

STRUCTURAL STEEL:

Structural steel in end bents shall be AASHTO M 270 with grade and payment as specified in the plans.

FOR ADDITIONAL INFORMATION AND NOTES, SEE LAYOUT(S) AND PLAN DETAILS.

STANDARD GENERAL NOTES
FOR STEEL BRIDGE STRUCTURES

ARKANSAS STATE HIGHWAY COMMISSION
LITTLE ROCK, ARK.

DRAWN BY:	A.M.S.	DATE:	9-2-2015	FILENAME:	b55006.dgn
CHECKED BY:	B.E.F.	DATE:	9-2-2015	SCALE:	NO SCALE
DESIGNED BY:	STD.	DATE:			

DRAWING NO. 55006

PRINT DATE: 11/7/2019

DATE REVISED	DATE FILMED	DATE REVISED	DATE FILMED	FED. ROAD DIST. NO.	STATE	FED. AID PROJ. NO.	SHEET NO.	TOTAL SHEETS
				6	ARK.			
				JOB NO.				
				1	STEEL BRIDGE STRUCTURES 55007			

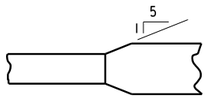

Plan-Unequal Width (Flg.)

FLANGE SPLICE

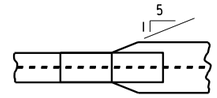

FLANGE SPLICE AT UNEQUAL BOTTOM FLANGE WIDTHS

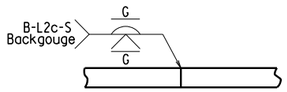

Equal Thickness

WEB & FLANGE SPLICE

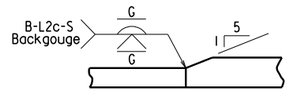

Unequal Thickness

FLANGE SPLICE

(Use when Base Metal Thickness is Equal to or Less than 2")

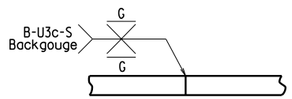

Equal Thickness

WEB & FLANGE SPLICE

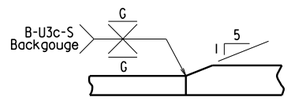

Unequal Thickness

FLANGE SPLICE

(Use when Base Metal Thickness is Greater than 2")

DETAILS OF WELDED SPLICES FOR PLATE GIRDERS

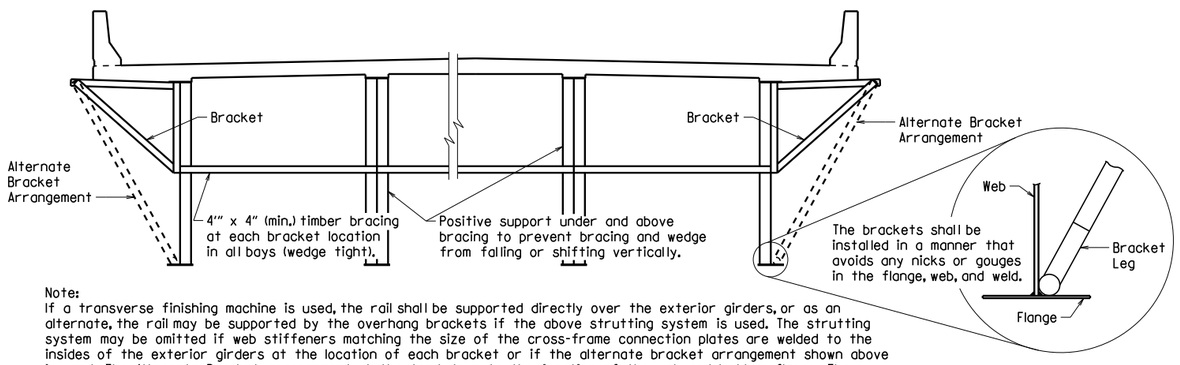

Note:
If a transverse finishing machine is used, the rail shall be supported directly over the exterior girders, or as an alternate, the rail may be supported by the overhang brackets if the above strutting system is used. The strutting system may be omitted if web stiffeners matching the size of the cross-frame connection plates are welded to the insides of the exterior girders at the location of each bracket or if the alternate bracket arrangement shown above is used. The Alternate Bracket arrangement shall extend down to the junction of the web and bottom flange. The stiffener shall conform to the details for cross frame connection plates shown on the plans. No direct payment will be made for brackets, timber bracing, supports, or welded stiffeners. Payment shall be subsidiary to "Structural Steel in Plate Girder Spans (____)".

SCREED RAIL SUPPORT FOR PLATE GIRDERS

(USE WHEN WEB DEPTHS ARE 48" OR GREATER)

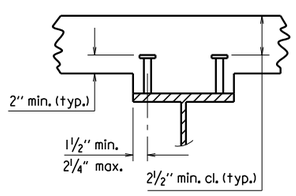

2 STUDS PER ROW

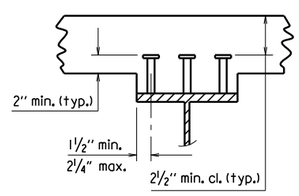

3 STUDS PER ROW

Stud Shear Connectors shall be automatically end welded to the beam or girder flange in accordance with the recommendations of the Manufacturer. See plan details for number and size.

SHEAR CONNECTOR DETAIL

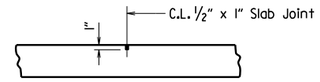

Use Type 3 or 4 Joint Sealer. See Subsections 501.02(h) and 501.05(j). Backer Rod filler will not be required. Joint Sealer shall be measured and paid for as Class S(AE) Concrete-Bridge. Slab Joints shall extend to the outside edge of the deck slab and shall align with open joints at the front face of the parapet. Slab joints shall be installed before the parapet railing is poured. If slab joints are to be sawed, they shall be sawed as soon as the concrete has sufficiently set to allow sawing of the joint without damage to the slab. Slab joints shall be placed at all pouring sequence construction joints and required slab joint locations. The joint sealer shall extend across the deck from gutterline to gutterline.

ADDITIONAL NOTES IF SIDEWALKS OR RAISED MEDIANS ARE REQUIRED:
Slab Joints shall be installed before the sidewalk or raised median is poured. After installation of the joint in the sidewalk or raised median and prior to pouring the parapet rail, the joint sealer shall be placed extending across the deck slab from gutterline to gutterline and acrosss the top of the sidwalk or raised median to the edge of the slab. No joint sealer shall be placed on the deck slab under the sidewalk or raised median.

TRANSVERSE SLAB JOINT DETAIL

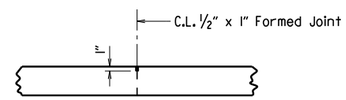

Use ½" x 1" Type 3 or 4 Joint Sealer. See Subsections 501.02(h) and 501.05(j). Backer Rod filler will not be required. Joint sealer shall be measured and paid for as Class S(AE) Concrete-Bridge. This joint shall be formed. Seal color shall be gray or other color similar to concrete.

LONGITUDINAL CONSTRUCTION JOINT

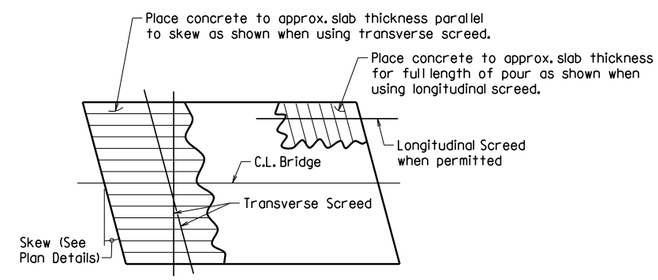

Note: At the Contractor's option, the transverse screed may be placed parallel to the skew or perpendicular to C.L. Bridge.

CONCRETE PLACEMENT PROCEDURE FOR BRIDGES WITH SKEW

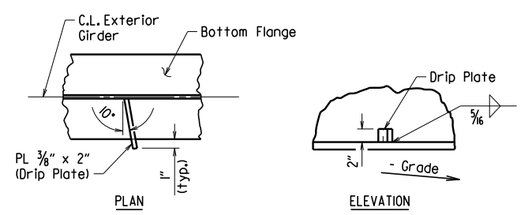

Drip Plate to be welded to the outer side of the bottom flange of the exterior girders.

Locate drip plate 5'-0" from C.L. Bearing on high side of each Bent, unless otherwise noted in the plans.

BOTTOM FLANGE DRIP PLATE

(USE WHEN WEB DEPTHS ARE 54" OR GREATER AND UNIT OR SPAN IS NOT IN LEVEL GRADE)

t_s = slab thickness. See "Typical Roadway Section" in the plans.

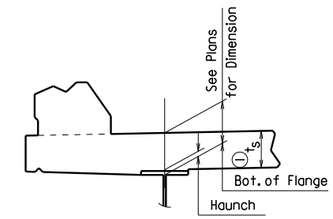

EXTERIOR BEAM OR GIRDER

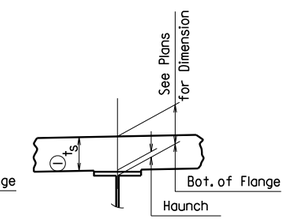

INTERIOR BEAM OR GIRDER

(1) Tolerance when removable deck forming is used is + ½", - ¼". Haunch forming is required and shall be adjusted to maintain slab thickness tolerance.

NOTES:
Haunch dimension may vary within the following limits to maintain the grade and slab thickness tolerance: Minimum occurs when top flange contacts bottom reinforcing steel; Maximum = top flange thickness plus 1¾" unless otherwise noted in the plans. No increase in concrete and structural steel quantities will be made to maintain tolerances.

Tolerances shown are applicable only when removable deck forming is used. See Std. Dwg. No. 55005 for tolerances when permanent steel deck forms are used. Payment for concrete shall be based on removable deck forming.

ADJUSTMENT FOR SLAB THICKNESS TOLERANCE

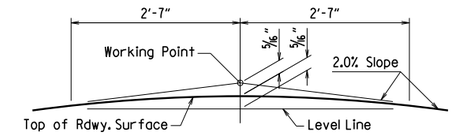

NOTE: Working Point matches Theoretical Roadway Grade.

ROUNDING DETAIL

BRIDGES IN NORMAL CROWN

WELD TABLE

Material Thickness of Thicker Part Joined (Inches)	Minimum Size of Fillet Weld (Inches)	Single Pass Weld Must Be Used
To ¾" Inclusive	¼"	
Over ¾"	5/16"	

NOTE: When a fillet weld size, as shown on the plans, is larger than the minimum, the first pass shall be that specified for minimum size of fillet weld.

SECTION AND SUBSECTION REFER TO THE ARKANSAS STATE HIGHWAY AND TRANSPORTATION DEPARTMENT STANDARD SPECIFICATIONS FOR HIGHWAY CONSTRUCTION (2014 EDITION).

THESE DETAILS ARE APPLICABLE UNLESS OTHERWISE SHOWN IN THE PLAN DETAILS, SPECIAL PROVISIONS, OR SUPPLEMENTAL SPECIFICATIONS.

STANDARD DETAILS FOR STEEL BRIDGE STRUCTURES

ARKANSAS STATE HIGHWAY COMMISSION

LITTLE ROCK, ARK.

DRAWN BY:	JYP	DATE:	2/11/2016	FILENAME:	b55007.dgn
CHECKED BY:	AMS	DATE:	2/11/2016	SCALE:	No Scale
DESIGNED BY:	STD.	DATE:	—		

DRAWING NO. 55007

DATE REVISED	DATE FILMED	DATE REVISED	DATE FILMED	FED. ROAD DIST. NO.	STATE	FED. AID PROJ. NO.	SHEET NO.	TOTAL SHEETS
				6	ARK.			
				JOB NO.				
				1	POURED SILICONE JOINT			55008

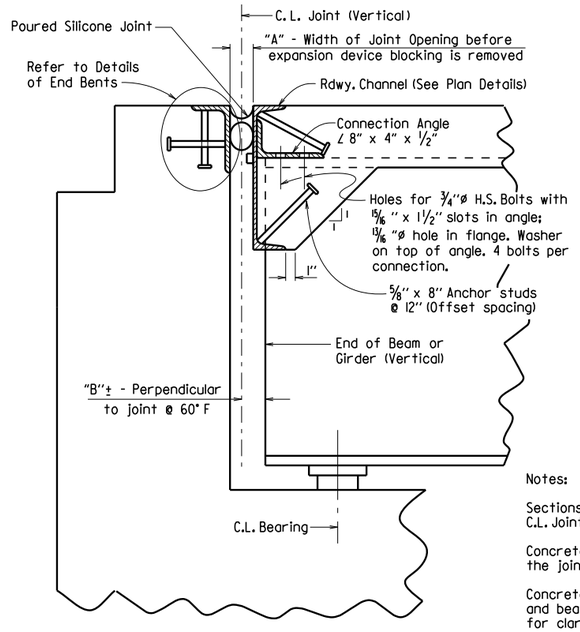

SECTION THRU JOINT AT END BENT

Notes:

Sections are taken perpendicular to C.L. Joint.

Concrete shall be hand packed under the joint armor.

Concrete diaphragms, steel diaphragms and bearing stiffeners are not shown for clarity. See plans for details.

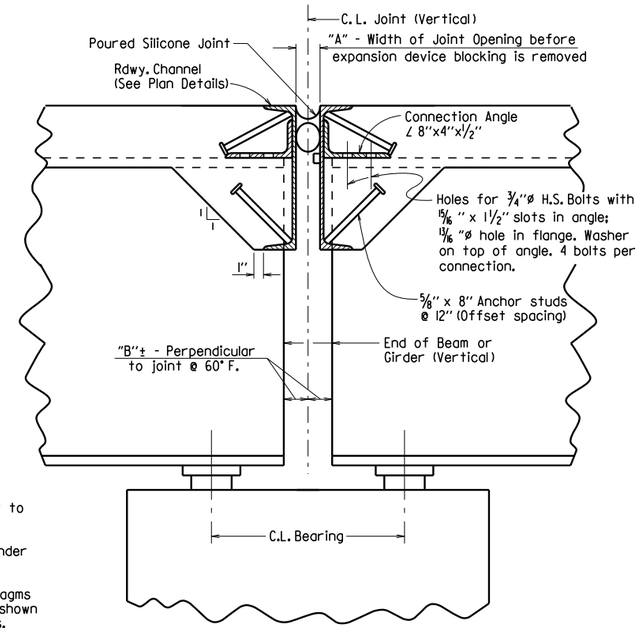

SECTION THRU JOINT AT INTERMEDIATE BENT

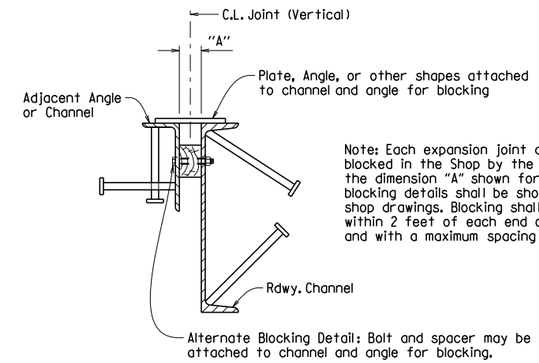

Note: Each expansion joint device shall be blocked in the Shop by the Fabricator to the dimension "A" shown for 60° F and the blocking details shall be shown on the shop drawings. Blocking shall be placed within 2 feet of each end of the device and with a maximum spacing of 8 feet.

DETAILS FOR BLOCKING EXPANSION JOINT DEVICE

EXPANSION DEVICE INSTALLATION AT END BENTS:

The Contractor may elect to install the expansion device using one of the following two alternatives:

1) The concrete span pour adjacent to joint shall be placed before the end bent backwall is placed. After the end bent backwall forms are in place and the beams or girders erected, the blocked expansion device shall be installed and adjusted for grade. All connection bolts shall be fully tightened prior to placing the deck concrete adjacent to the bent. Immediately prior to pouring the backwall concrete, the blocking shall be removed, and the opening adjusted for temperature and grade.

2) The backwall shall be poured to the optional construction joint after beams or girders are erected. The blocked expansion device shall be installed and adjusted for grade. All connection bolts shall be fully tightened prior to placing the deck concrete adjacent to the bent. Immediately prior to pouring the remainder of the backwall concrete, the blocking shall be removed and the opening adjusted for temperature and grade.

EXPANSION DEVICE INSTALLATION AT INTERMEDIATE BENTS:

After all beams or girders on each side of the joint are erected the blocked expansion device shall be installed and adjusted for grade. Deck concrete shall be placed for the entire unit or span on one side of the joint before deck concrete on the other side is placed. Connection bolts for the first side to have deck concrete placed shall be completely bolted. Bolts on the other side shall be loosely installed so that thermal and rotational movements will not be restricted during concrete placement on the first side.

Connection bolts on the second side shall remain loose until the concrete pour adjacent to the joint is to be placed. Immediately prior to pouring the span concrete on the second side, the blocking shall be removed, the joint adjusted for temperature and grade, and the connection bolts tightened.

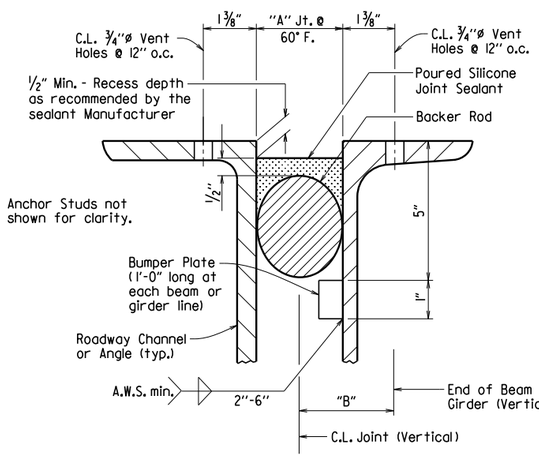

DETAIL OF POURED SILICONE JOINT

Silicone joint material and installation shall conform to Section 809. The temperature limitations recommended by the sealant Manufacturer shall be observed. The sealant shall be installed only when the average 24 hour air temperature is between 40° and 80° F.

Use an appropriately sized backer rod at the depth shown in the Manufacturer's literature based on the joint width at the time of sealing. Unless otherwise noted, do not install more backer rod than can be sealed in the same day.

The Contractor shall verify separation of the backer rod from the joint material after the joint material has set.

When bridge deck is constructed in stages, backer rods shall be extended beyond length of poured joint in initial construction stage so that the two pieces can be properly spliced together prior to installing sealant in subsequent stages. Manufacturer's recommendations shall be followed to prevent sealant from "running out of joint" during stage construction.

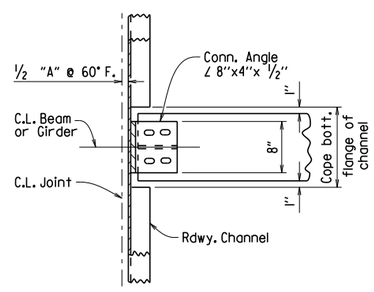

CHANNEL CONNECTION DETAIL

BENTS WITHOUT SKEW

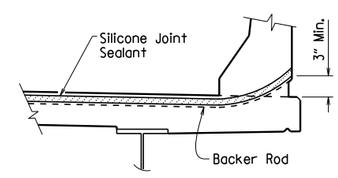

JOINT SEAL PLACEMENT AT RAIL

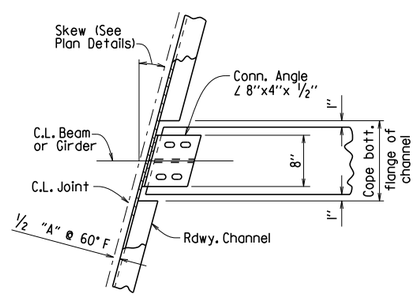

CHANNEL CONNECTION DETAIL

BENTS WITH SKEW

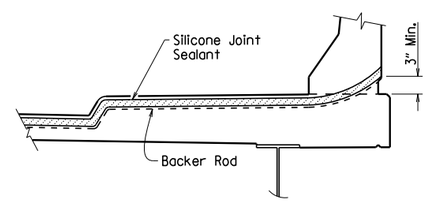

JOINT SEAL PLACEMENT AT SIDEWALK

SECTION AND SUBSECTION REFER TO THE ARKANSAS STATE HIGHWAY AND TRANSPORTATION DEPARTMENT STANDARD SPECIFICATIONS FOR HIGHWAY CONSTRUCTION (2014 EDITION).

THESE DETAILS ARE APPLICABLE UNLESS OTHERWISE SHOWN IN THE PLAN DETAILS, SPECIAL PROVISIONS, OR SUPPLEMENTAL SPECIFICATIONS. SEE "TABLE OF SILICONE JOINT DATA" IN PLAN DETAILS FOR VARIABLES "A" AND "B", AND BUMPER PLATE SIZE.

STANDARD DETAILS FOR POURED SILICONE JOINTS

ARKANSAS STATE HIGHWAY COMMISSION

LITTLE ROCK, ARK.

DRAWN BY:	A.C.P.	DATE:	2/11/2016	FILENAME:	b55008.dgn
CHECKED BY:	A.M.S.	DATE:	2/11/2016	SCALE:	No Scale
DESIGNED BY:	STD.	DATE:	—		

DRAWING NO. 55008

DATE REVISED	DATE REVISED	FED. RD. DIST. NO.	STATE	JOB NO.	SHEET NO.	TOTAL SHEETS
4-14-23		6	ARK.			
		TYPE D NAME PLATE - 55010				

The name of the bridge as shown on the plans shall be placed on Lines 1 & 2 using ⅛" raised letters and numerals ⅜" high.

	Example 1	Example 2	Example 3	Example 4
Line 1	RED RIVER	SOUTHERN RAILROAD	SALINE RIVER	HIGHWAY 5
Line 2	RELIEF	OVERPASS	RELIEF	

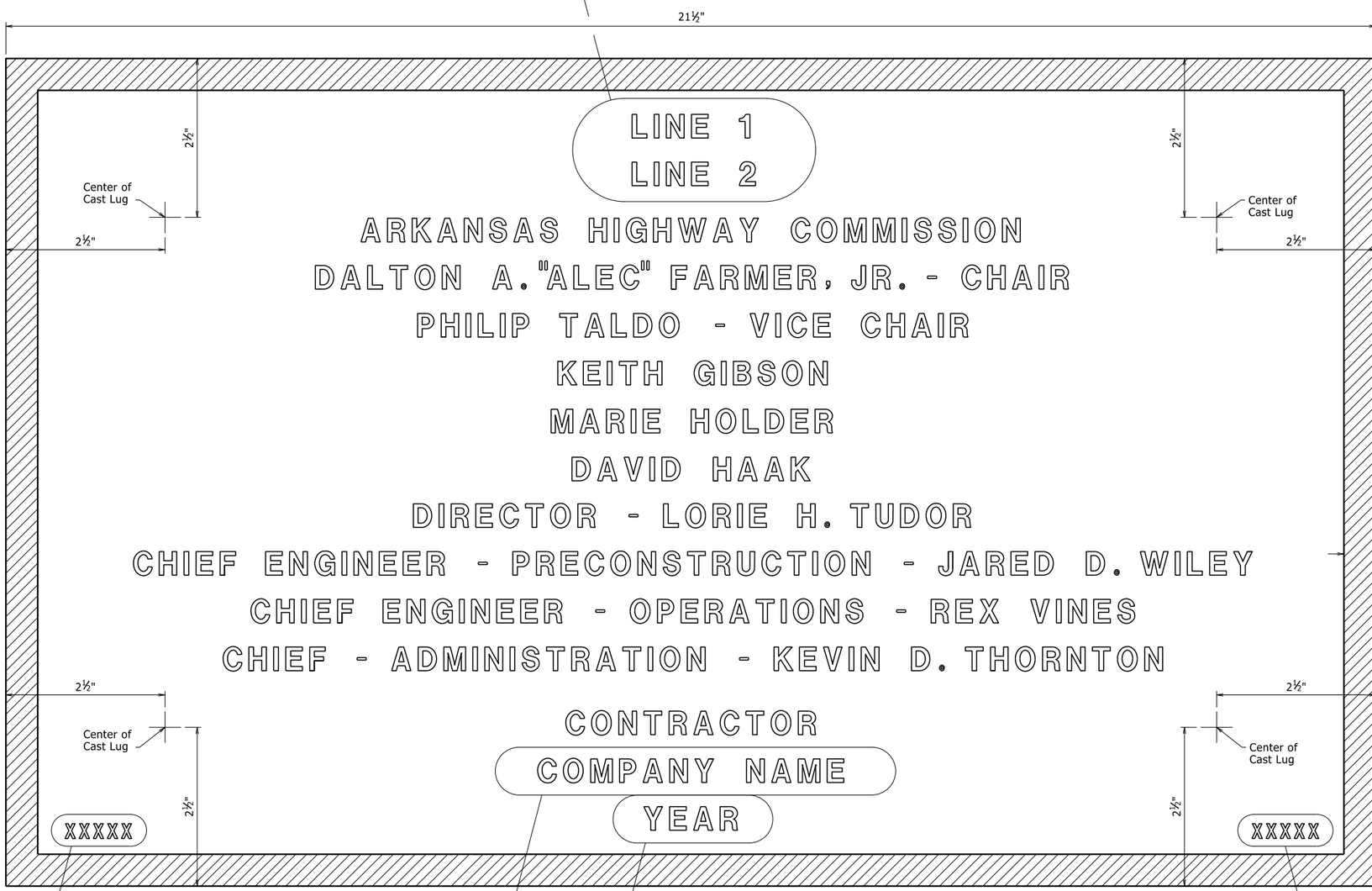

TYPICAL BRIDGE NAME PLATE

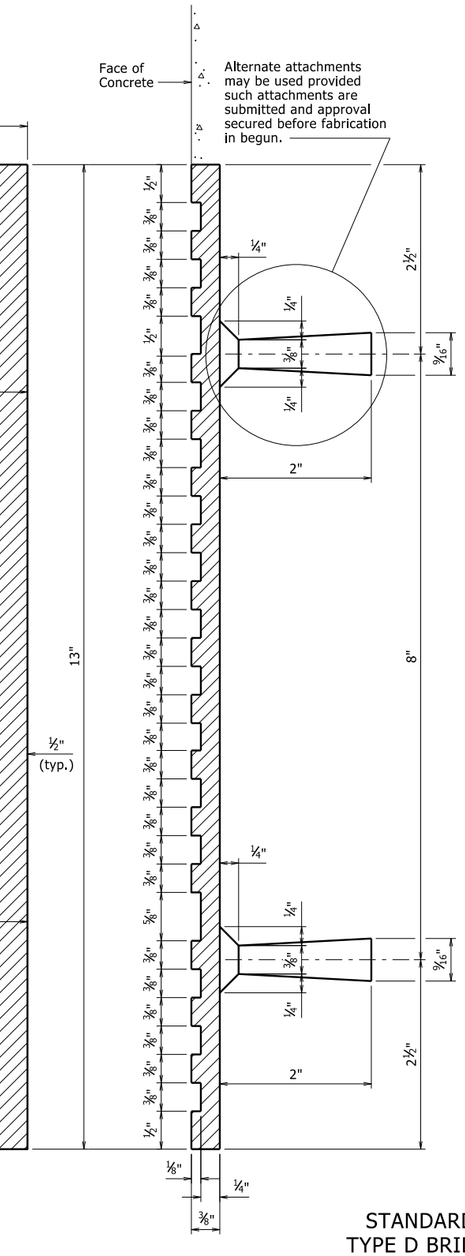

GENERAL NOTES

Specifications: Arkansas State Highway and Transportation Department Standard Specifications for Highway Construction, (2014 Edition) with applicable Supplemental Specifications and Special Provisions.

Name plates shall be cast bronze and shall meet the material requirements as specified in Section 812.

Body of plate shall be ¼" thick and shall include four tapering cone lugs ⅜" to 9/16" x 2" long. The border and all lettering shall be raised ⅛" above the face of plate and shall be polished.

All lettering shall be plain gothic, square cut and not tapered.

The number of plates required and the location and name on the plate for each bridge shall be as designated on the plans.

1 Revised and Redrawn
4-14-23 CGP Checked By: CRE

STANDARD DETAILS FOR
TYPE D BRIDGE NAME PLATE

ROUTE SEC.

ARKANSAS STATE HIGHWAY COMMISSION
LITTLE ROCK, ARK.

DRAWN BY: KDH DATE: 2-27-2014 FILENAME: b55010.dgn
CHECKED BY: BEF DATE: 2-27-2014 SCALE: NO SCALE
DESIGNED BY: STD. DATE:

DRAWING NO. 55010

PRINT DATE: 4/20/2023

DATE REVISED	DATE FILMED	DATE REVISED	DATE FILMED	FED. ROAD DIST. NO.	STATE	FED. AID PROJ. NO.	SHEET NO.	TOTAL SHEETS
				6	ARK.			
				JOB NO.				

1 TRANSITIONAL RAIL - 55013A

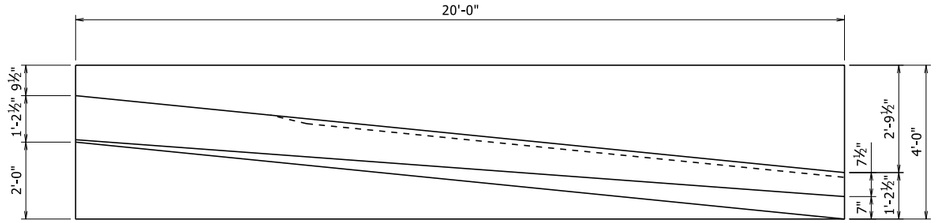

PLAN OF TRANSITIONAL APPROACH RAILING

Railings on each side of roadway are opposite hand to each other

½" = 1'-0"

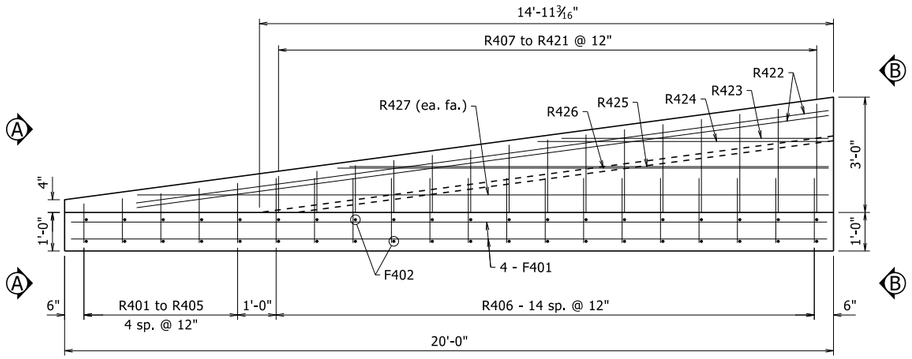

ELEVATION OF TRANSITIONAL APPROACH RAILING

½" = 1'-0"

1 Recess height varies as shown from 2'-0" to 0".

2 Eliminate recess when formliner with architectural finish is used. See Plans for additional Information.

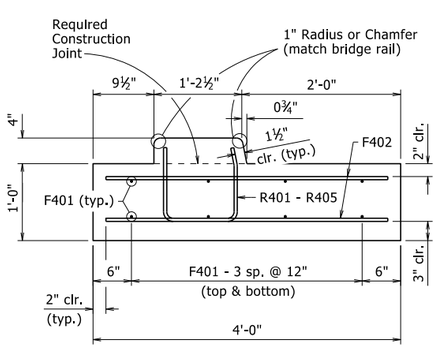

VIEW A-A

1" = 1'-0"

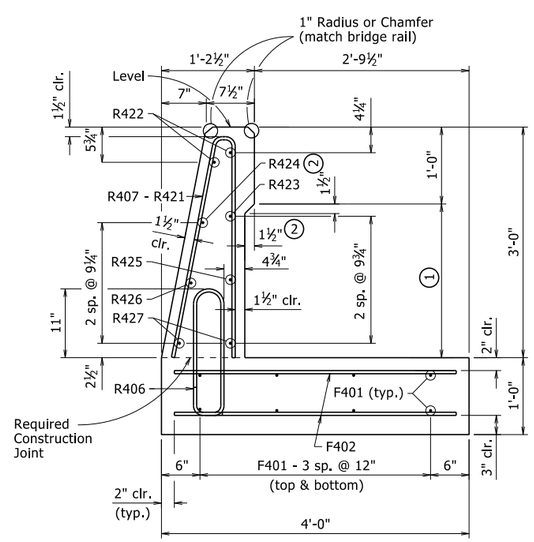

VIEW B-B

1" = 1'-0"

GENERAL NOTES

Transitional Approach Railing Type SSTR36 shall be placed at locations shown in plans.

All concrete shall be Class "S" with a minimum 28 day compressive strength f'c = 3,500 psi and shall be poured in the dry. All exposed corners to be chamfered 1" unless otherwise noted.

All reinforcing steel shall be Grade 60 conforming to AASHTO M 31 or M 322, Type A, with mill test reports.

All longitudinal lines within the limits of horizontal curves shall be on curves concentric to C.L. Construction. Adjustment to longitudinal bar lengths may be required. Transverse reinforcing shall be placed on radial lines to C.L. Construction.

Unless otherwise required in the plans, curing and finishing shall be in accordance with Subsection 806.05(c) and the surface finish type and areas of application shall match that used on the adjacent bridge railing or barrier wall. See Subsection 802.19(3) for Class 3 Textured Coating Finish or Subsection 803.03(a) or 803.03(b) for Class 1 or 2 Protective Surface Treatment, respectively. Surface finishes shall not be paid for directly, but shall be considered incidental to the unit price bid for "Transitional Approach Railing."

When alternate surface and/or architectural finishes are specified in the plans, no direct payment will be made, and the alternate finish shall be considered incidental to the unit price bid for "Transitional Approach Railing". See plan details for additional Information when architectural finishes are specified.

Transitional Approach Railing Type SSTR36 shall be paid for at the contract unit price bid for "Transitional Approach Railing". See Section 806 for additional information.

Scales shown are for 22"x34" drawings. When using 11"x17" drawings, reduce scale by one half.

BAR LIST - ONE TRANSITIONAL APPROACH RAILING

MARK	NO. REQ'D	LENGTH	P.D.
F401	8	19'-8"	Str.
F402	40	3'-8"	Str.
R401 to R405	1 ea.	2'-10" - 3'-11"	2"
R406	15	4'-5"	2"
R407 to R421	1 ea.	2'-5" - 5'-9"	2"
R422	2	18'-2"	Str.
R423	1	6'-11"	Str.
R424	1	7'-6"	Str.
R425	1	12'-6"	Str.
R426	1	12'-9"	Str.
R427	2	17'-11"	Str.

BENDING DIAGRAMS

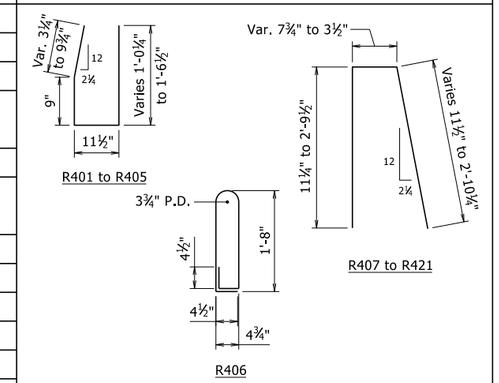

Dimensions are out to out of bars.

FOR INFORMATION ONLY
SCHEDULE OF QUANTITIES PER RAIL UNIT

CLASS "S" CONCRETE	REINFORCING STEEL (GRADE 60)	CLASS 1 PROTECTIVE SURFACE TREATMENT	CLASS 2 PROTECTIVE SURFACE TREATMENT	CLASS 3 TEXTURED COATING FINISH
4.1 Cu. Yds.	374 Lbs.	0.2 Gal.	8.1 Sq. Yd.	15.6 Sq. Yd.

Only one of the above three surface treatments shall be applied to the transitional approach railing. See "General Notes" on this sheet.

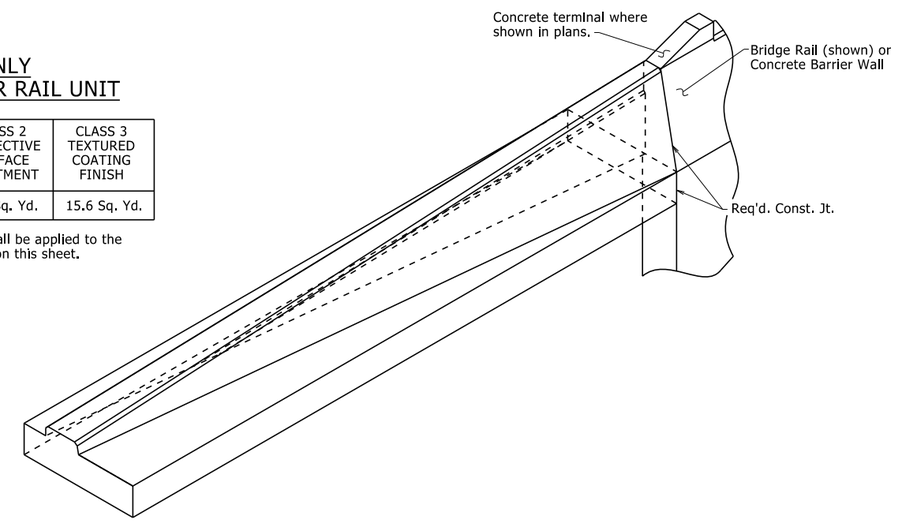

PICTORIAL OF TRANSITIONAL APPROACH RAILING

Sidewalk not shown for clarity
No Scale

SECTION AND SUBSECTION REFER TO THE ARKANSAS STATE HIGHWAY AND TRANSPORTATION DEPARTMENT STANDARD SPECIFICATIONS FOR HIGHWAY CONSTRUCTION (2014 EDITION).

THESE DETAILS ARE APPLICABLE UNLESS OTHERWISE SHOWN IN THE PLAN DETAILS, SPECIAL PROVISIONS, OR SUPPLEMENTAL SPECIFICATIONS.

STANDARD DETAILS FOR TRANSITIONAL APPROACH RAILING TYPE SSTR36

ARKANSAS STATE HIGHWAY COMMISSION

LITTLE ROCK, ARK.

DRAWN BY:	KWY	DATE:	4/8/2021	FILENAME:	b55013a.dgn
CHECKED BY:	BHS	DATE:	4/8/2021	SCALE:	As Shown
DESIGNED BY:	STD.	DATE:	--		

DRAWING NO. 55013A

PRINT DATE: 4/9/2021

DATE REVISED	DATE FILMED	DATE REVISED	DATE FILMED	FED. ROAD DIST. NO.	STATE	FED. AID PROJ. NO.	SHEET NO.	TOTAL SHEETS
				6	ARK.			
				JOB NO.				

1 TYPE H2 RAILING - 55015

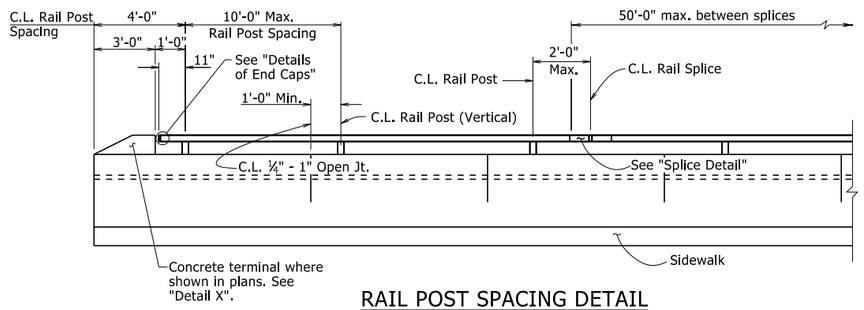

RAIL POST SPACING DETAIL

(Horizontal dimensions are along face of rail)

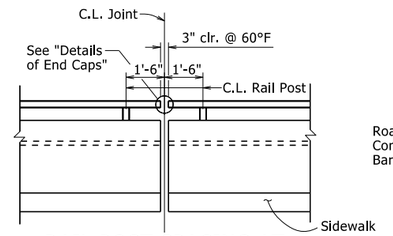

RAIL POST SPACING AT EXPANSION JOINTS

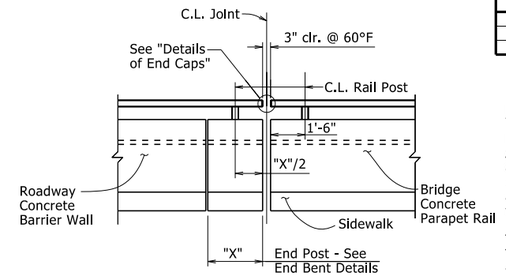

RAIL POST SPACING AT BRIDGE ENDS WITH CONCRETE BARRIER WALL

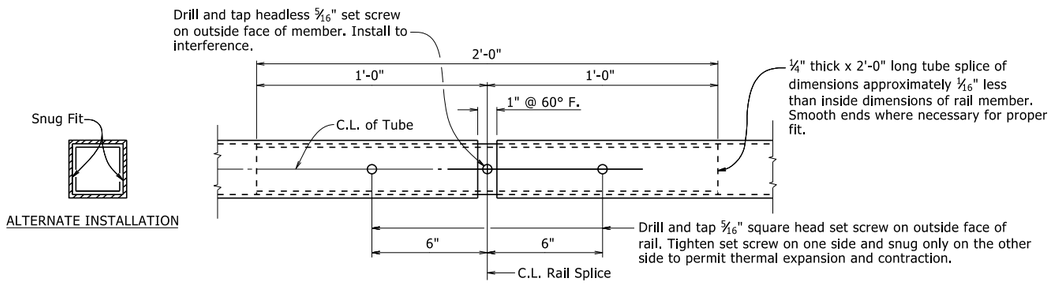

SPLICE DETAIL

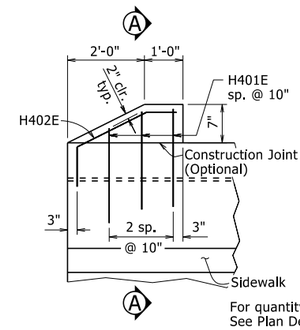

DETAIL X

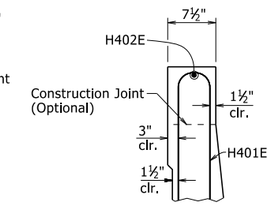

SECTION A-A

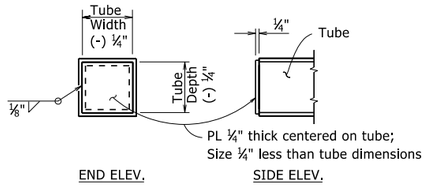

DETAILS OF END CAPS

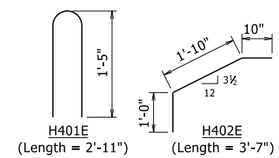

Pin diameter for bending is 2". Bars shall be epoxy coated.

BENDING DIAGRAMS

(Dimensions are Out-to-Out of Bars)

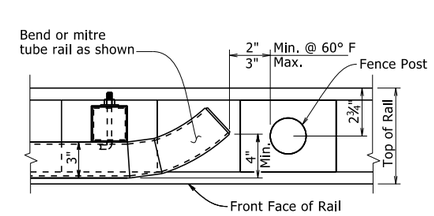

DETAILS OF RAIL TERMINUS AT FENCE POST

(When Chain Link Fence is Required)

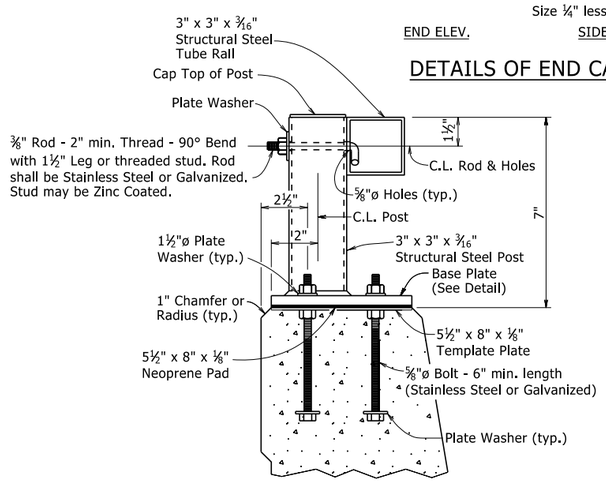

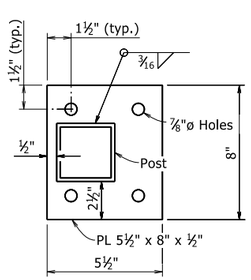

DETAILS OF POST ANCHOR SYSTEM

(Cast-in-Place Bolts)

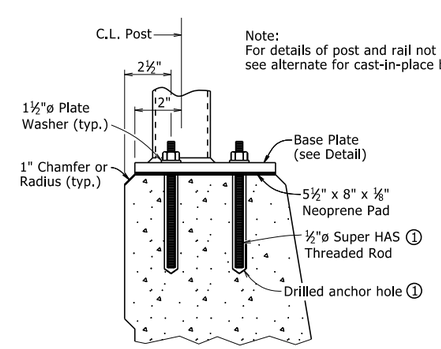

Note:
For details of post and rail not shown, see alternate for cast-in-place bolts.

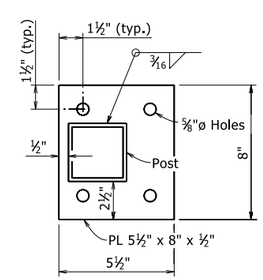

1 HILTI HIT RE 500 Epoxy Adhesive Anchor System with 4½" embedment or approved equal.

The Hilti Epoxy Adhesive Anchor System (or approved equal) shall be installed in accordance with Manufacturer's recommendations.

DETAILS OF ALTERNATE POST ANCHOR SYSTEM

(Epoxy Adhesive Anchors)

MATERIALS:

Rail tubing, posts, end caps, and base plates shall conform to ASTM A709, Grade 36 or ASTM A500-Grade B, and shall be galvanized after fabrication in accordance with Subsection 806.02(c). When required elsewhere in the plans, steel rail members shall receive a powder coating process after galvanizing. Galvanized surfaces shall be prepared in accordance with Subsection 807.87 and the manufacturer's recommendations prior to application of the powder coating process.

The powder coating process shall be a two coat system applied using electrostatic spray. The base coat shall be a thermosetting epoxy powder with a minimum thickness of 2 to 4 mils. The top coat shall be tough polyester powder with a minimum thickness of 2 to 4 mils. The color shall be as shown in the plans. Coated galvanized framework shall have a salt spray resistance of 3,000 hours using ASTM B117 without loss of adhesion. The powder coating process shall be in accordance with manufacturer's recommendations. Any damage to the powder coated finish shall be repaired with a compatible touch-up system in accordance with the manufacturer's recommendations and to the satisfaction of the Engineer at the Contractor's expense.

Cast-in-place anchor bolts, nuts, washers, and set screws shall be galvanized high-strength steel or stainless steel. Mixing of galvanized and stainless steel fasteners will not be permitted.

High-Strength Steel:
Cast-in-place anchor bolts shall conform to ASTM F3125, Grade A325, Type 1.
Nuts shall conform to ASTM A563, Grade DH or AASHTO M 292, Grade 2H.
Washers shall conform to ASTM F436.
Plate Washers shall conform to ASTM A709, Grade 36.
Template Plates shall conform to ASTM A709, Grade 36.
Splice Set Screws shall conform to ASTM A307, Grade A.
Anchor bolts, nuts, washers, plate washers, and set screws shall be galvanized in accordance with AASHTO M 232, Class C or ASTM B695, Class 50.

Stainless Steel:
Cast-in-place anchor bolts shall conform to ASTM A193, Grade B8, Class 2 or A320, Grade B8, Class 2 with a minimum yield strength of 80,000 psi.
Nuts shall conform to ASTM A194, Grade 8.
Washers shall conform to ASTM A240, Type 302.
Plate Washers shall conform to ASTM A240, Type 302.
Template Plates shall conform to ASTM A240, Type 302.
Splice Set Screws shall conform to ASTM A193, Grade B8, Class 1 or A320, Grade B8, Class 1.

Threads on bolts, screws, and nuts shall conform to American Standard Coarse Series, Class 2 FIT, ASA Specification B1.1. Plate washers shall have dimensions meeting the requirements of ANSI/ASME B18.22.1, Type A plain washer (Wide Series) unless otherwise noted. Neoprene pads shall conform to the requirements of Subsection 807.15(b).

GENERAL NOTES FOR BRIDGE RAILING:

Rail layout shall conform to vertical and horizontal alignment of bridge. All posts shall be vertical. Rail sections shall be fabricated to attach to at least three posts.

Base plates shall not be placed upon areas that are improperly finished, deformed or irregular.

Bridge railing, including posts, templates, and base plates, fasteners, and neoprene pads shall be paid for at the contract unit price bid per linear foot for "Metal Bridge Railing (Type H2)". When required elsewhere in the plans, powdered coating finish and repair of powdered coating finish shall be considered subsidiary to the item "Metal Bridge Railing (Type H2)".

Shop drawings showing details of railing shall be submitted and approval secured prior to fabrication.

SECTION AND SUBSECTION REFER TO THE ARKANSAS STATE HIGHWAY AND TRANSPORTATION DEPARTMENT STANDARD SPECIFICATIONS FOR HIGHWAY CONSTRUCTION (2014 EDITION).

THESE DETAILS ARE APPLICABLE UNLESS OTHERWISE SHOWN IN THE PLAN DETAILS, SPECIAL PROVISIONS, OR SUPPLEMENTAL SPECIFICATIONS.

STANDARD DETAILS FOR
TYPE H2 RAILING

ARKANSAS STATE HIGHWAY COMMISSION

LITTLE ROCK, ARK.

DRAWN BY:	KJT	DATE:	6/25/2020	FILENAME:	b55015.dgn
CHECKED BY:	KWY	DATE:	6/25/2020	SCALE:	No Scale
DESIGNED BY:	STD.	DATE:	-		

DRAWING NO. 55015

PRINT DATE: 4/6/2021

DATE REVISED	DATE FILMED	DATE REVISED	DATE FILMED	FED. ROAD DIST. NO.	STATE	FED. AID PROJ. NO.	SHEET NO.	TOTAL SHEETS
3/24/16				6	ARK.			
				JOB NO.				
						STEEL SHELL PILES		55021

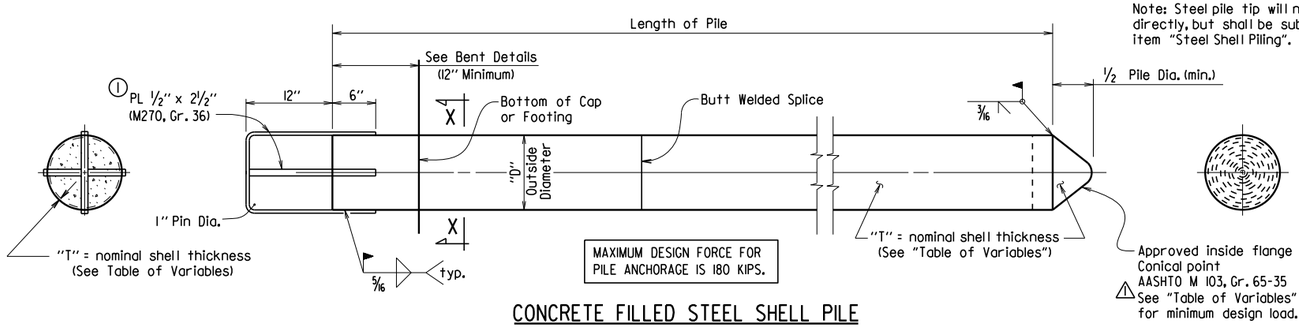

Note: Steel pile tip will not be paid for directly, but shall be subsidiary to the item "Steel Shell Piling".

CONCRETE FILLED STEEL SHELL PILE

① Pile anchorage shall be placed to minimize interference with anchor bolts and reinforcing in cap or footing.

② Welding shall comply with ANSI/AWS D1.4 Structural Welding Code-Reinforcing Steel and applicable portions of ANSI/AWS D1.5 Bridge Welding Code.

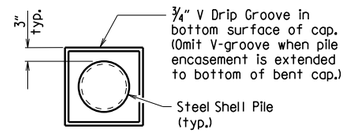

VIEW X-X

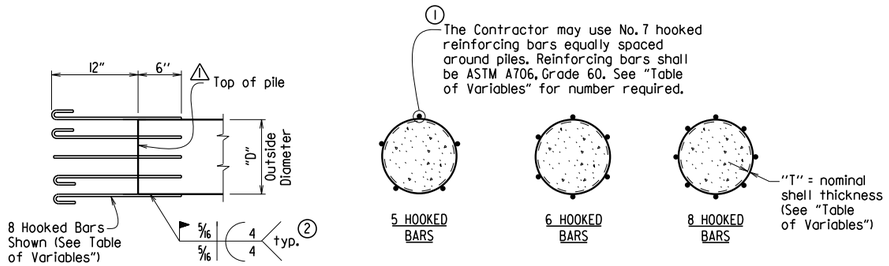

ALTERNATE PILE ANCHORAGE DETAIL

Note: Hooked bars shall be oriented to provide the required concrete clearances shown in the plans.

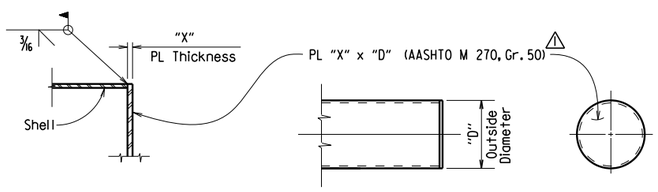

PART SECTION

ELEVATION

ALTERNATE FLAT TIP DETAIL

Note: The alternate flat tip detail shall not be used on steel shell piling to be driven through embankments constructed with internal geosynthetic reinforcement.

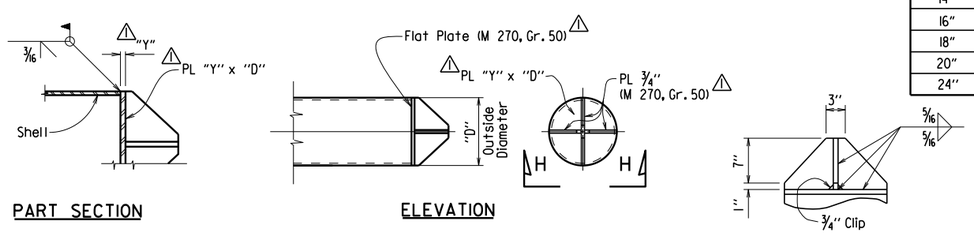

PART SECTION

ELEVATION

VIEW H-H

ALTERNATE VANED TIP DETAIL

GENERAL NOTES FOR CONCRETE FILLED STEEL SHEEL PILES:

Steel shells shall conform ASTM A252, Grade 3 (Fy = 45,000 psi.)

Concrete used for filling of steel shell shall be Class S with a minimum 28-day compressive strength, f'c = 3,500 psi. and shall be poured in the dry.

Steel shell piling that extends above the ground and is not protected by pile encasement shall be painted in accordance with Subsection 805.02.

See Bridge Layout for size and estimated length of steel shell piles and for driving information.

Concrete, structural steel, reinforcing steel (including welding), and painting shall not be paid for directly, but shall be considered subsidiary to the item "Steel Shell Piling".

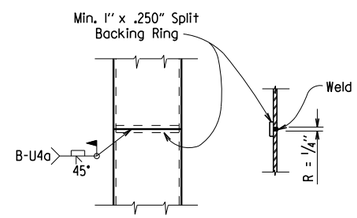

TYPICAL SPLICE DETAILS

TABLE OF VARIABLES

OUTSIDE DIAMETER "D"	NOMINAL SHELL THICKNESS "T"	⚠ PLATE THICKNESS "X"	⚠ PLATE THICKNESS "Y"	NO. OF HOOKED BARS FOR ALTERNATE PILE ANCHORAGE	⚠ MINIMUM CONICAL TIP DESIGN LOAD (KIPS)
14"	0.50"	2 1/4"	1 1/2"	5	859
16"	0.50"	2 1/4"	1 1/2"	5	986
18"	0.50"	2 1/2"	1 1/2"	6	1,114
20"	0.50"	2 1/2"	1 3/4"	6	1,241
24"	0.50"	2 3/4"	1 3/4"	8	1,495

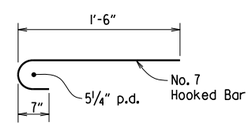

HOOKED BAR DETAIL

⚠ Revised and added various details by KWY, Ck'd. by BEF, 3/24/16.

GENERAL NOTES FOR PILE ENCASEMENTS:

⚠ See Bridge Layout for additional notes, any pile encasement restrictions and required location of pile encasements.

Concrete shall be Class S with a minimum 28-day compressive strength, f'c = 3,500 psi. If concrete cannot be placed in the dry, Seal Concrete may be used from top to bottom of encasement.

Reinforcing steel shall be Grade 60 conforming to AASHTO M 31 or M 322, Type A.

Welded wire fabric shall conform to AASHTO M 55 or M 221.

Concrete, welded wire fabric or reinforcing steel, and galvanized pipe shall not be paid for directly, but shall be considered subsidiary to the item "Pile Encasement".

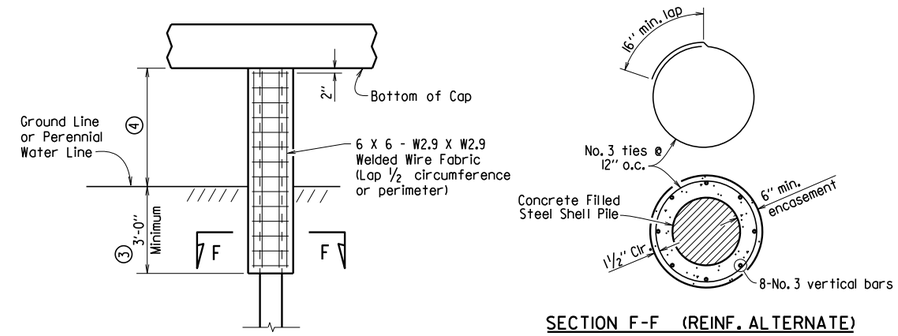

SECTION F-F (REINF. ALTERNATE)

PILE ENCASEMENT DETAIL FOR STEEL SHELL PILES

⑤ (Shown with Encasement to Bottom of Cap)

③ Unless otherwise noted on Bridge Layout.

④ See Bridge Layout for height of pile encasement (3'-0" Minimum).

⑤ Pile encasement, when not extended to bottom of cap, shall have 2" concrete taper for water runoff as shown in the detail for partial height encasement.

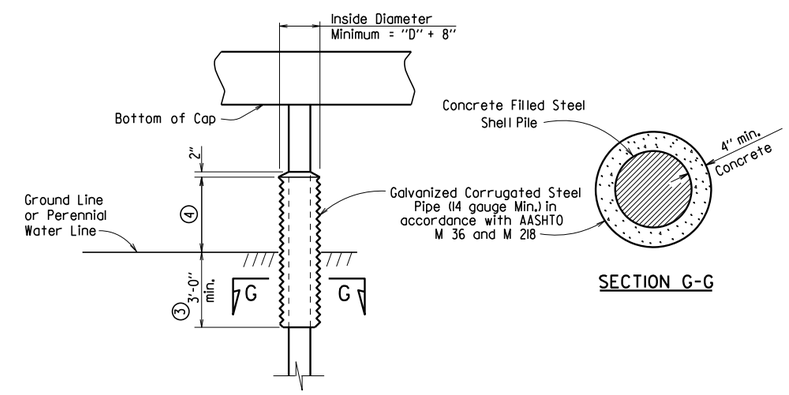

SECTION G-G

ALTERNATE PILE ENCASEMENT DETAIL FOR STEEL SHELL PILES

(Shown with Partial Height Encasement)

This document was originally issued and sealed by Charles R. Ellis, PE No. 9235, on March 24, 2016. This copy is not a signed and sealed document.

STATE OF ARKANSAS
REGISTERED PROFESSIONAL ENGINEER
No. 9235
CHARLES R. ELLIS

BRIDGE ENGINEER

STANDARD DETAILS FOR CONCRETE FILLED STEEL SHELL PILES AND PILE ENCASEMENTS

ARKANSAS STATE HIGHWAY COMMISSION

LITTLE ROCK, ARK.

DRAWN BY:	A.M.S.	DATE:	2/27/2014	FILENAME:	b55021.dgn
CHECKED BY:	B.E.F.	DATE:	2/27/2014	SCALE:	NO SCALE
DESIGNED BY:	STD.	DATE:	—		

DRAWING NO. 55021

DATE REVISED	DATE FILMED	DATE REVISED	DATE FILMED	FED. ROAD DIST. NO.	STATE	FED. AID PROJ. NO.	SHEET NO.	TOTAL SHEETS
09/27/2022				6	ARK.			
				JOB NO.				

1 TYPE SSTR36 - 55070

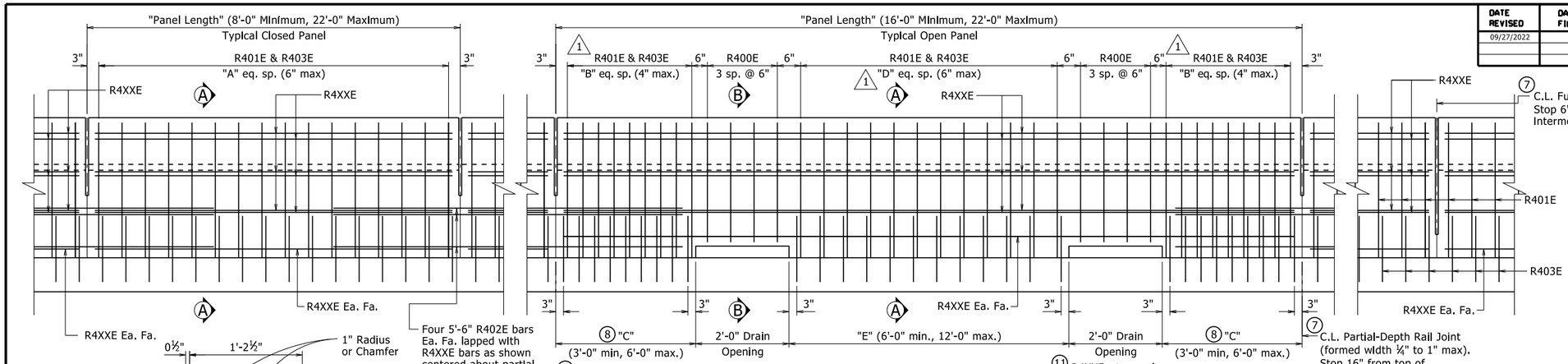

1 ELEVATION - SINGLE SLOPE TRAFFIC RAIL

¾" = 1'-0"

1. All measurements shown are along gutterline at base of rail.
2. Minimum embedment into deck/slab.
3. Eliminate recess when formliner with architectural finish is used. See Plans for additional information.
4. C.L. 1" ø formed holes for ⅞" ø bolts. See Standard Drawings GR-10 and GR-12 for additional information.
5. Only applicable for bridges with rail cast directly on bridge deck/slab surface. Increase height as necessary for sidewalks, see Plans for additional information.
6. Field bend front leg of R401E bar as required to maintain minimum 1½" front face clearance within limits of taper.
7. When optional slip forming is used: to control cracking, all rail joints must be V-grooved around the perimeter of the rail prior to concrete set and sawing. Depth of V-groove shall be ½". Sawing of the joints shall be done as soon as practical to a width of ¼", and must be controlled so it will follow the V-Groove.
8. End posts shall be the same length within a panel.

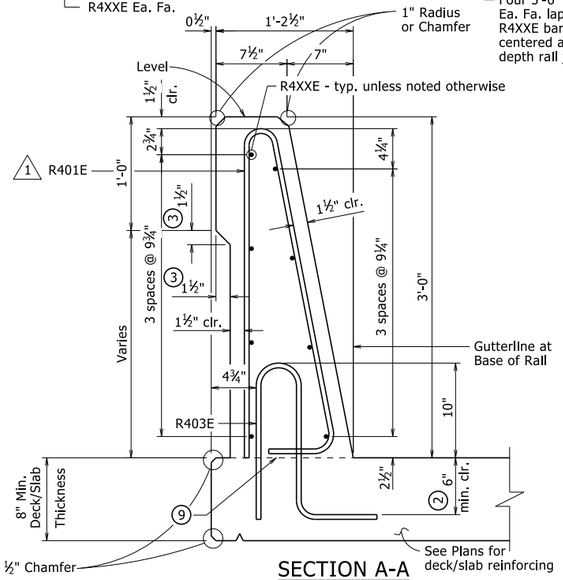

SECTION A-A

1½" = 1'-0"

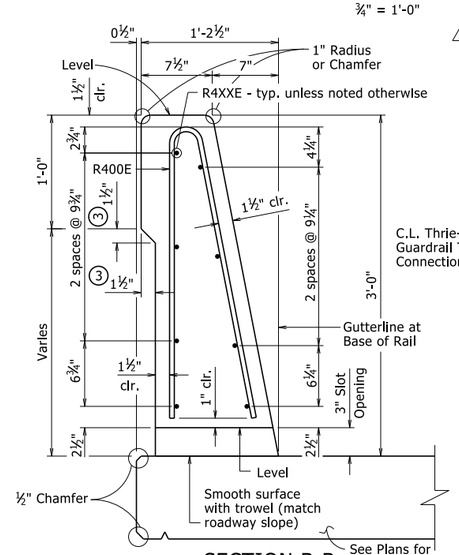

SECTION B-B

1½" = 1'-0"

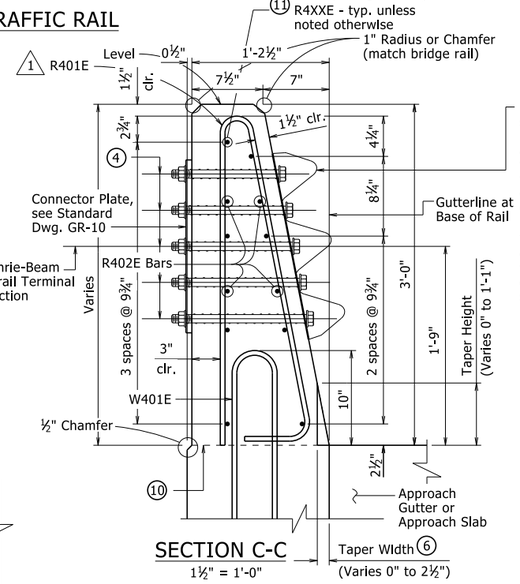

Bolt Special End Shoe to face of rail as shown. Tapered washers are not required between the head of the bolts and the sloped face of the rail. Tighten the five terminal connection bolts in a well distributed pattern to prevent damage or distortion of the thrie-beam connection. Cut bolts off after installation so as to extend no more than ¾" beyond nut. Paint ends of cut-off bolts with zinc-rich paint. This work and material will not be paid for directly but shall be considered subsidiary to associated contract items.

SECTION C-C

1½" = 1'-0"

BENDING DIAGRAM

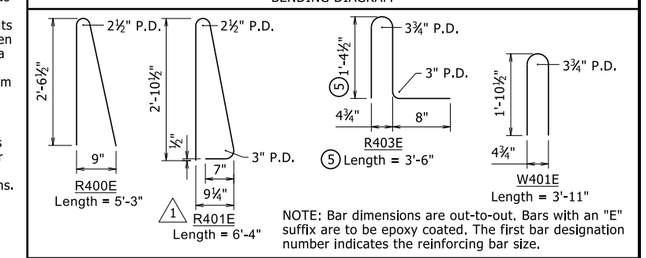

NOTE: Bar dimensions are out-to-out. Bars with an "E" suffix are to be epoxy coated. The first bar designation number indicates the reinforcing bar size.

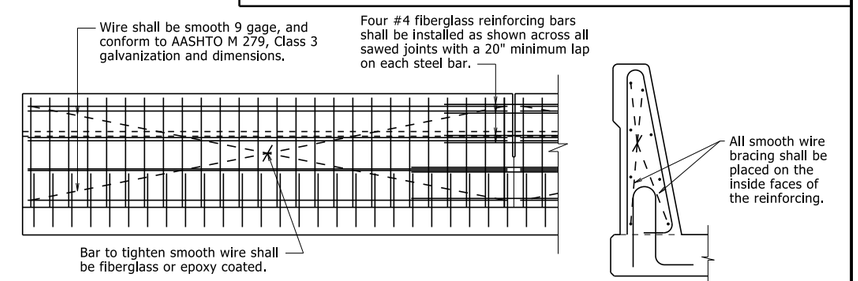

The extruded rail shall conform to the horizontal and vertical lines shown on the plans or as directed by the Engineer and shall present a smooth, uniform appearance and texture. Unless otherwise noted, exposed surfaces may be given a light brush finish or a Class 3, Textured Coating Finish in place of Class 2, Rubbed Finish.

All panels shall be braced as required to prevent racking.

Slip forming will not be allowed on bridges where formliner with architectural treatment is used unless approval from the Engineer is obtained.

DETAILS OF OPTIONAL SLIP FORMING OF BRIDGE TRAFFIC RAIL

No Scale

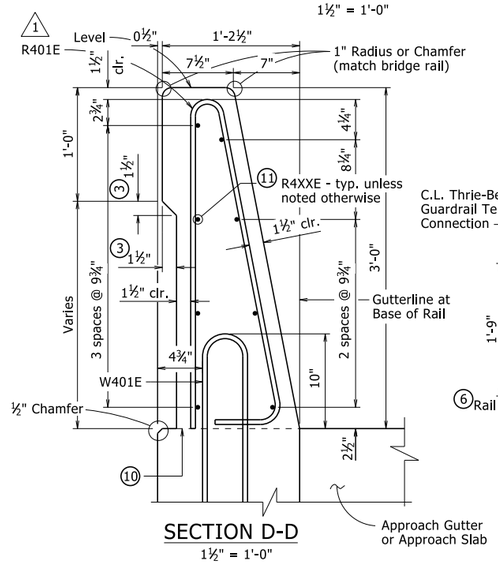

SECTION D-D

1½" = 1'-0"

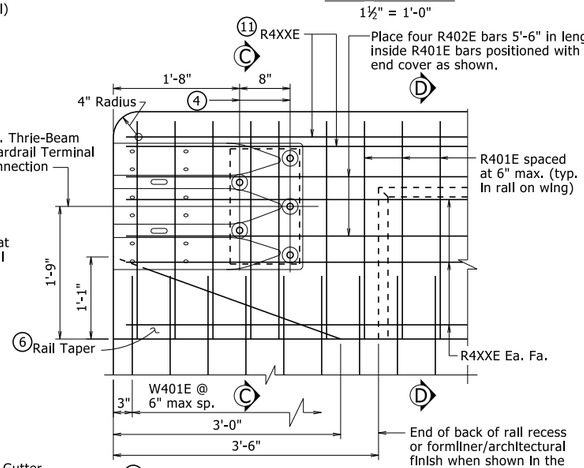

1 RAIL TERMINUS DETAILS

1" = 1'-0"

9 Required Construction Joint. Level where water flows away from rail, match roadway slope where water flows toward rail.

10 Top of Abutment Wing & Required Construction Joint (match bridge deck/slab construction joint slope). See Plans for Wing reinforcing.

11 These bars will not be included in the "Table of Variables". See Plans for details.

TABLE OF VARIABLES

Closed Rail Panels			Open Rail Panels					
Panel Length	A	R4XXE	Panel Length	B	C	D	E	R4XXE

See Plans for table with values.

GENERAL NOTES

This rail has been successfully evaluated by full-scale crash test to meet MASH TL-4 criteria.

Details shown are general for bridges without sidewalks. See Plans for additional details and requirements specific to bridges with sidewalks.

For Table of Variables, Rail Bar List, locations of Full and Partial Depth Rail Joints, and Wing & Rail Bar Lists, see Plans.

For location of drain openings, see Plans. Drain openings shown are not applicable for bridges with sidewalks. Drain openings will not be allowed over Railroad Right of Way, travelled roadways, and protected waterways.

Rail Terminus details, including Rail Taper, are not applicable for bridges with sidewalks or when bridge railing is continuous with roadway railing.

Scales shown are for 22"x34" drawings. When using 11"x17" drawings, reduce scale by one half.

1 Modified bending diagram and spacing for R401E bar.

By: CGP, Checked by: CMW 09/27/2022

This document was originally issued and sealed by Charles R. Ellis, PE No. 9235, on November 5, 2020. This copy is not a signed and sealed document.

STATE OF ARKANSAS
LICENSED PROFESSIONAL ENGINEER
No. 9235
CHARLES R. ELLIS

BRIDGE ENGINEER

THESE DETAILS ARE APPLICABLE UNLESS OTHERWISE SHOWN IN THE PLAN DETAILS, SPECIAL PROVISIONS, OR SUPPLEMENTAL SPECIFICATIONS.

STANDARD DETAILS FOR BRIDGE TRAFFIC RAIL TYPE SSTR36

ARKANSAS STATE HIGHWAY COMMISSION

LITTLE ROCK, ARK.

DRAWN BY:	KWY	DATE:	11/5/2020	FILENAME:	b55070.dgn
CHECKED BY:	LJB	DATE:	11/5/2020	SCALE:	As Noted
DESIGNED BY:	STD.	DATE:	-----		

DRAWING NO. 55070

PRINT DATE: 10/6/2022

REFER TO TABULATION OF QUANTITIES FOR "W" & "B" DIMENSIONS

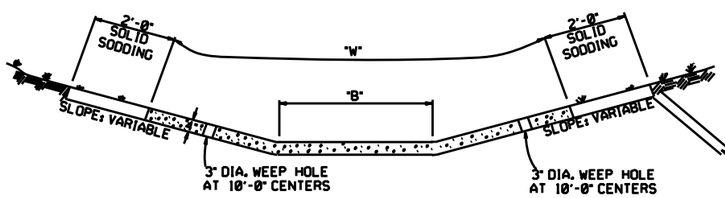

TYPE A

EXCAVATE TO NEAT LINES TO CONSTRUCT DITCH PAVING AND SOLID SODDING.

REFER TO TABULATION OF QUANTITIES FOR "W" DIMENSIONS

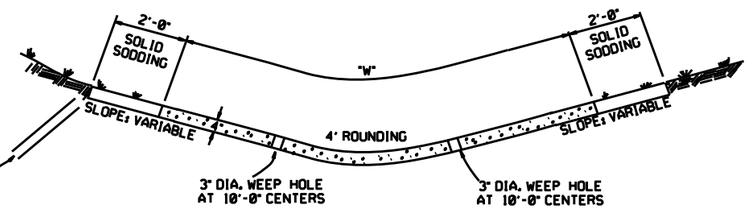

TYPE B

THE STEEL AND ADDITIONAL CONCRETE FOR THE WALLS SHALL NOT BE PAID FOR DIRECTLY, BUT SHALL BE CONSIDERED TO BE INCLUDED IN THE PRICE BID FOR "CONCRETE DITCH PAVING."

TOE WALL DEPTH MAY BE ALTERED TO 1'-0" WHEN DIRECTED BY THE ENGINEER IN ROCK EXCAVATION

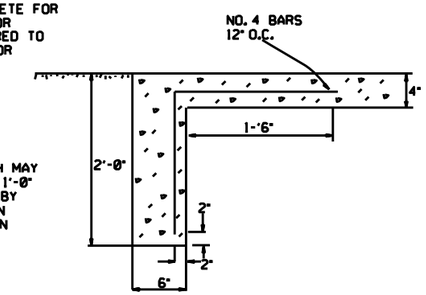

TOE WALL DETAIL FOR CONCRETE DITCH PAVING

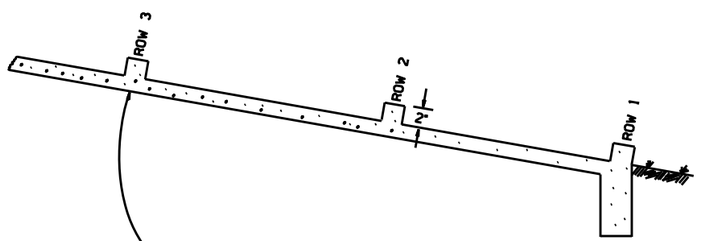

NUMBER OF ELEMENTS PER ROW VARIES WITH WIDTH OF PAVING SPECIFIED

ENERGY DISSIPATORS TO BE USED FOR THE ENTIRE LENGTH OF DITCH WHEN SLOPE OF DITCH PAVING EXCEEDS 7%. THE DISSIPATORS WILL NOT BE PAID FOR DIRECTLY, BUT SHALL BE CONSIDERED TO BE INCLUDED IN THE PRICE BID FOR CONCRETE DITCH PAVING.

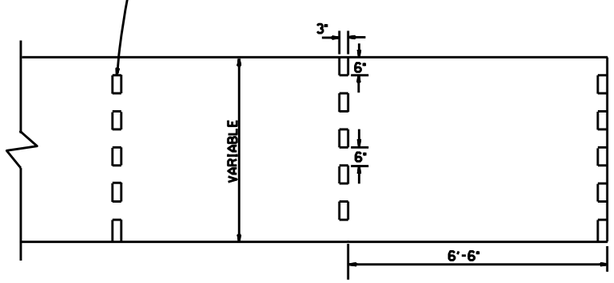

ENERGY DISSIPATORS
(NO SCALE)

GENERAL NOTES:

THE FULL WIDTH OF EACH SECTION SHALL BE POURED MONOLITHICALLY.

TOE WALLS TO BE CONSTRUCTED FULL WIDTH AT EACH END OF DITCH PAVING, AND POURED MONOLITHICALLY.

SOLID SOD ALONG DITCH PAVING TO BE PLACED WITHIN 14 DAYS OF DITCH PAVING CONSTRUCTION.

1" WIDE TRANSVERSE EXPANSION JOINTS SHALL BE PLACED IN CONCRETE DITCH PAVING AT 45' INTERVALS. THE SPACE SHALL BE FILLED WITH APPROVED JOINT FILLER COMPLYING WITH AASHTO M213.

DATE	REVISION	DATE FILMED
12-8-16	CORRECTED ENERGY DISSIPATOR DRAWING AND NOTE	
11-17-10	ADDED GENERAL NOTE	
6-2-94	ADDED GENERAL NOTE ABOUT SOLID SODDING	
11-30-8	ELIMINATED MIN. ROWS OF ELEMENTS	111-30-89
7-15-88	REVISED DISSIPATOR NOTE	653-7-15-88
4-3-87	REVISED ENERGY DISSIPATOR	671-4-3-87
1-9-87	MODIFIED NOTE ON ENERGY DISS.	532-1-9-87
11-3-86	ADDED NOTE TO ENERGY DISS.	599-12-1-86
11-1-84	ENERGY DISSIPATOR DETAILS ADDED	508-11-1-84
11-1-84	EXCAVATION DETAILS ADDED TYPED A & B	
10-2-72	REVISED AND REDRAWN	508-10-2-72

ARKANSAS STATE HIGHWAY COMMISSION

CONCRETE DITCH PAVING

STANDARD DRAWING CDP-1

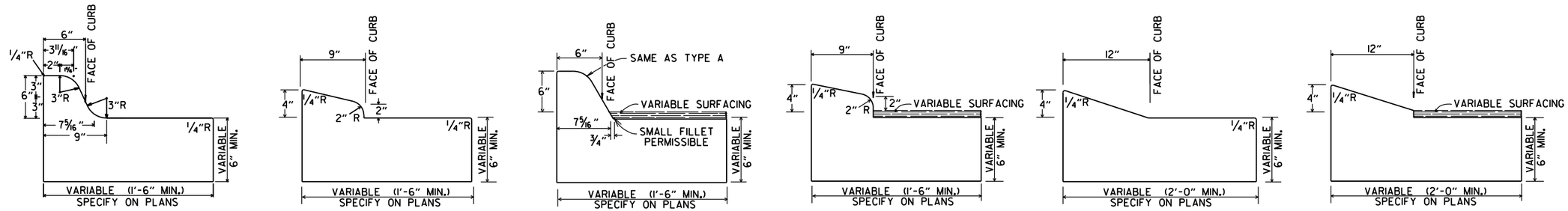

CONCRETE COMBINATION CURB AND GUTTER

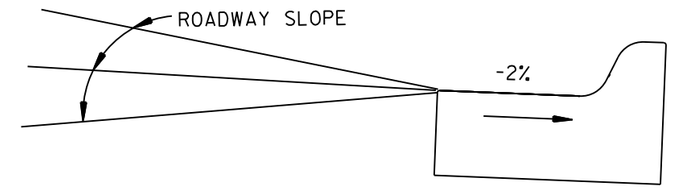

DETAIL OF GUTTER SLOPE

GUTTER SHALL BE CONSTRUCTED ON 2% SLOPE AWAY FROM ROADWAY, REGARDLESS OF ROADWAY SLOPE.

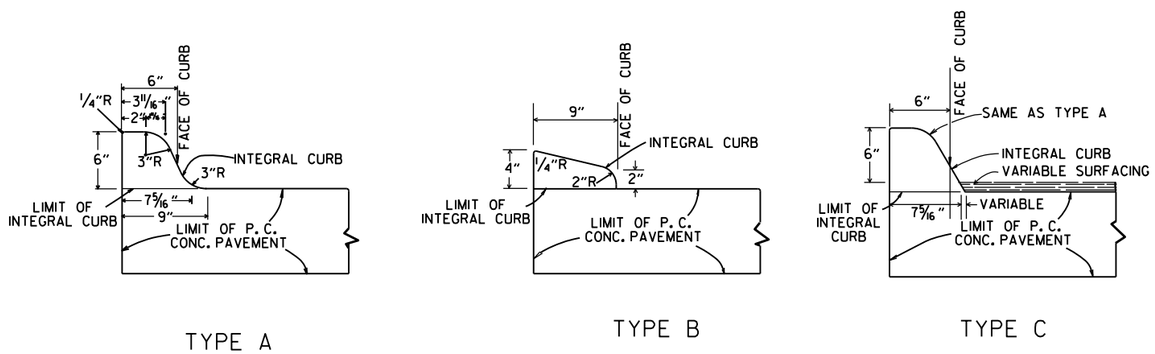

INTEGRAL CURB

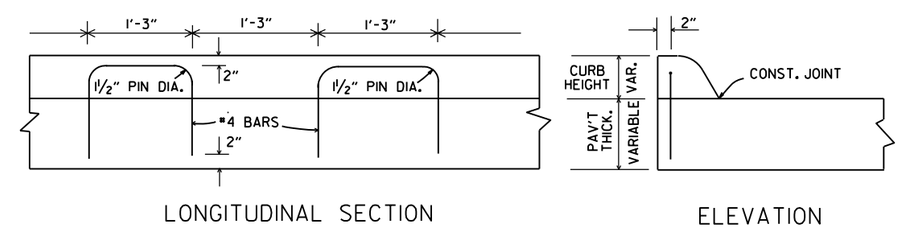

ALTERNATE CONSTRUCTION METHOD FOR INTEGRAL CURB

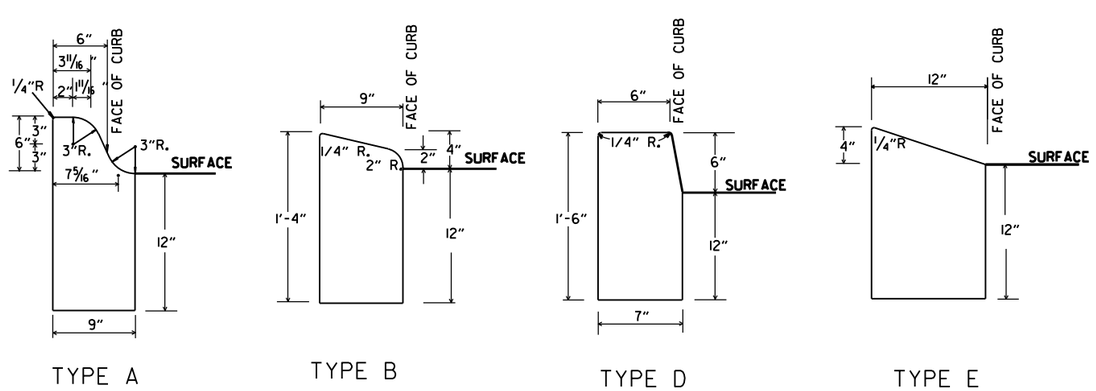

CONCRETE CURB

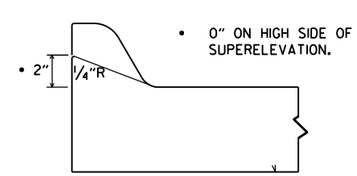

NOTE: USE MODIFIED CURB AS SPECIFIED ON STD. DR-1. COMPENSATION FOR MODIFIED CURB WILL BE CONSIDERED INCLUDED IN THE PRICE BID FOR THE TYPE OF CURB OR CURB AND GUTTER SPECIFIED.

DETAILS OF MODIFIED CURB

DATE	REVISION	DATE FILMED
11-29-07	REVISED GUTTER SLOPE & MODIFIED CURB DETAILS	
11-10-05	ADDED DETAILS OF TYPE E CURBS	
11-16-01	REVISED CONCRETE CURB TYPE B	
11-18-98	REVISED MODIFIED CURB	
6-2-94	ADDED NOTE TO SPECIAL MODIFIED CURB	
8-5-93	CORRECTED GUTTER SLOPE	8-5-93
10-1-92	ADDED DETAILS OF GUTTER SLOPE	10-1-92
5-24-90	ADDED DETAILS OF MODIFIED CURB	5-24-90
11-30-89	VARIBLE DEPTH TYPE A & B I	11-30-89
7-15-88	REVISED MODIFIED CURB	630-7-15-88
11-1-73	REVISED MODIFIED CURB	500-11-1-73
10-2-72	REVISED AND REDRAWN	512-10-2-72

ARKANSAS STATE HIGHWAY COMMISSION

CURBING DETAILS

STANDARD DRAWING CG-1

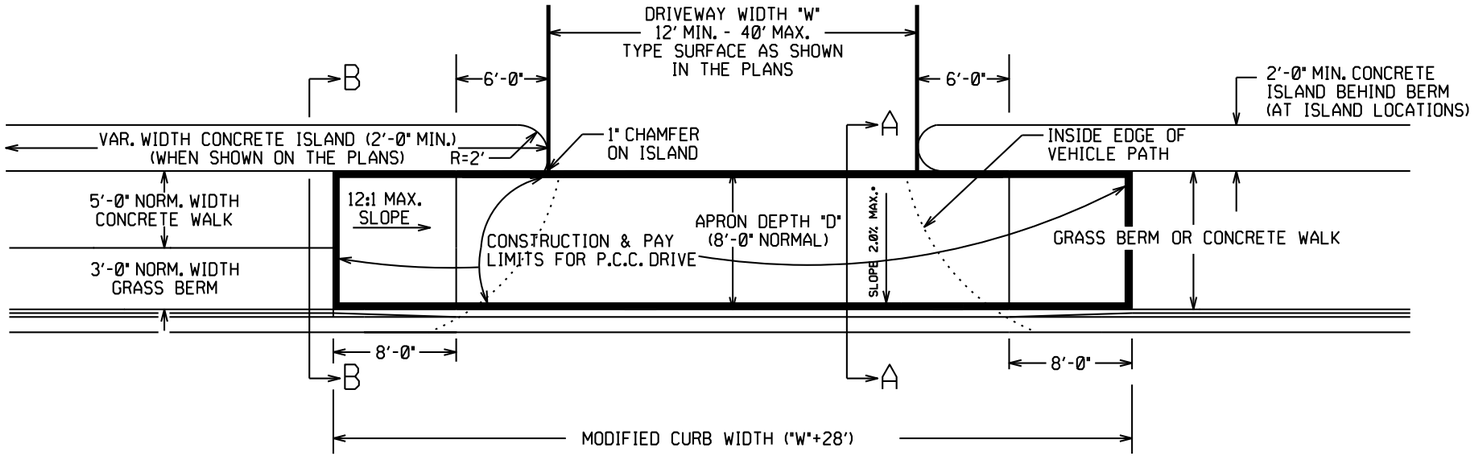

PLAN VIEW

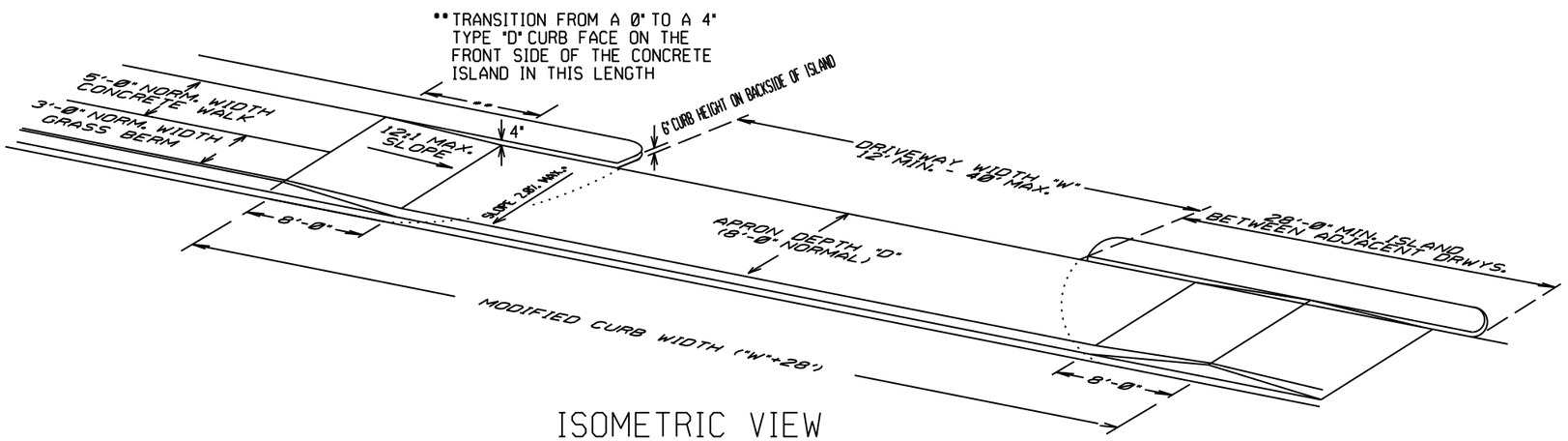

ISOMETRIC VIEW

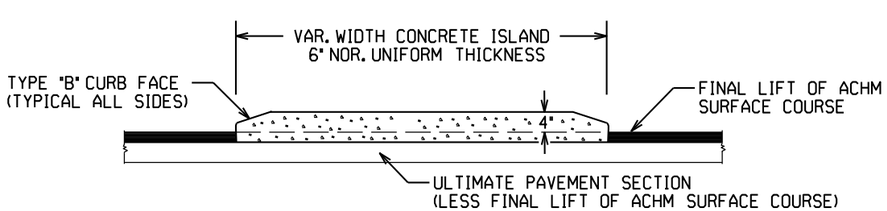

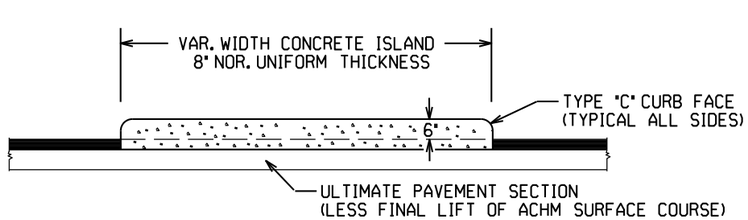

CURBED ISLANDS FOR CHANNELIZATION

CONCRETE ISLAND NOTES:

1. REFER TO PLANS FOR TYPE OF CURB FACE TO BE USED. NO DIRECT PAYMENT WILL BE MADE FOR THE CURB FACES SHOWN ON THE ISLAND DETAILS. PAYMENT FOR THE CURB FACE WILL BE INCLUDED IN THE UNIT PRICE BID FOR THE ITEM "CONCRETE ISLAND".

2. TRANSVERSE EXPANSION JOINTS, NOT LESS THAN 1/2" WIDE, SHALL BE PLACED AT MINIMUM INTERVAL OF 45'. TRANSVERSE JOINT SHALL BE CONSTRUCTED USING A JOINT FILLER COMPLYING WITH AASHTO M213.

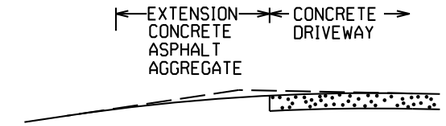

EXTENSION TYPICAL SECTIONS

1: CONCRETE - 6" P.C. CONCRETE DRIVEWAY

2: ASPHALT - 2" ACHM SURFACE COURSE (1/2")
4" ACHM BINDER COURSE (1") OR
4" ACHM BASE COURSE (1-1/2")

3: ASPHALT - 2" ACHM SURFACE COURSE (1/2")
7" AGGREGATE BASE COURSE

4: AGGREGATE - 6" AGGREGATE BASE COURSE

THE TYPE OF EXTENSION SHALL BE AS SHOWN IN THE PLANS. THE CONTRACTOR MAY, WITH THE APPROVAL OF THE ENGINEER, SUBSTITUTE A LOWER NUMBERED TYPE OF EXTENSION IN LIEU OF THE TYPE SPECIFIED IN THE PLANS, BUT AT NO ADDITIONAL COST TO THE DEPARTMENT.

DRIVEWAY EXTENSION DETAILS

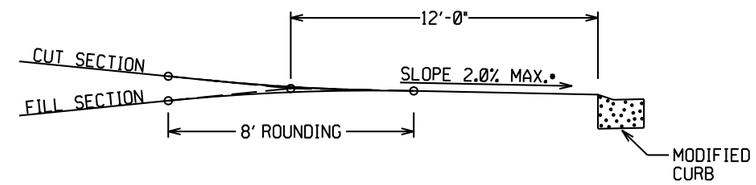

DRIVEWAY VERTICAL ALIGNMENT DETAILS

• NOTE: DRIVEWAYS MAY NOT BE SLOPED AWAY FROM THE ROADWAY UNLESS APPROVED BY THE ENGINEER.

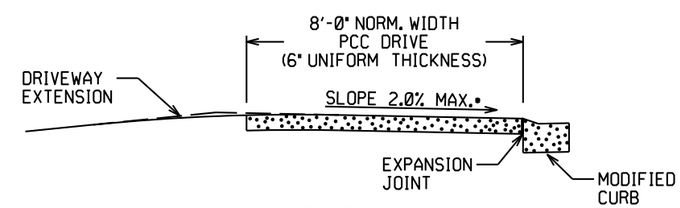

SECTION A-A

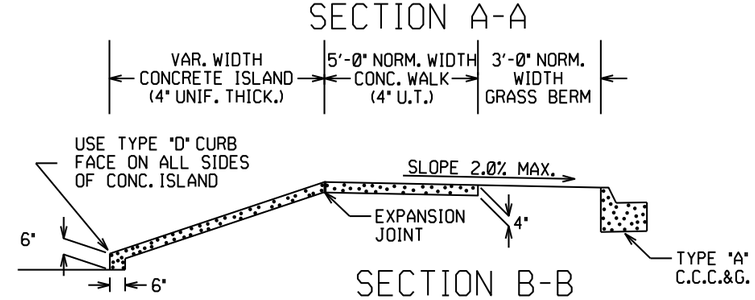

SECTION B-B

CURBED ISLAND BEHIND WALK

DATE REV	DATE FILMED	DESCRIPTION
5-19-22		REVISED ISLAND NOTES
11-07-19		REVISED WALK DETAILS
2-27-14		REVISED PLAN & ISOMETRIC VIEW
11-29-07		ADDED CHANNELIZATION ISLAND WITH TYPE C CURB FACE & REVISED DRIVEWAY SLOPE NOTE & VERTICAL ALIGNMENT DETAIL
11-10-05		REV. APRON SLOPE & DEPTH OF AGG. BASE.
8-22-02		ADDED ISLAND DETAILS & NOTES
3-30-00		REV. MOD. CURB WIDTH & TRANS. NOTE
11-19-98		REVISED NOTES
11-18-98		REDRAWN AND REISSUED

ARKANSAS STATE HIGHWAY COMMISSION

DETAILS OF DRIVEWAYS & ISLANDS

STANDARD DRAWING DR-1

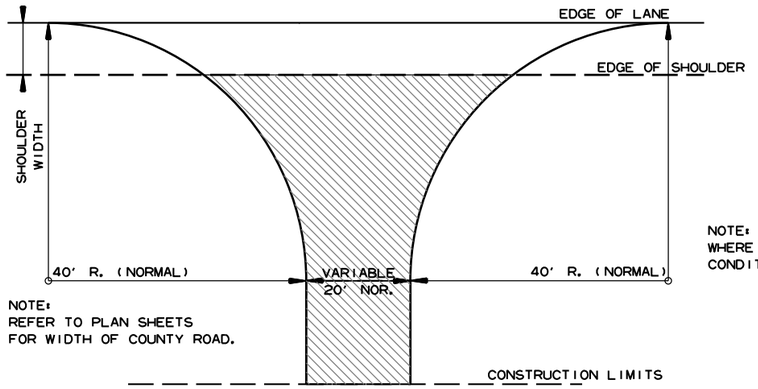

NOTE:
REFER TO PLAN SHEETS
FOR WIDTH OF COUNTY ROAD.

NOTE: TURNOUTS SHALL BE MODIFIED WHERE NECESSARY TO MEET LOCAL CONDITIONS AS DIRECTED BY THE ENGINEER.

ACHM SURFACE COURSE (1/2") (220 LBS. PER SQ. YD.) AND AGGREGATE BASE COURSE (CLASS 7) 7" COMP. DEPTH, UNLESS OTHERWISE SPECIFIED IN PLANS.

DETAIL FOR COUNTY ROAD TURNOUTS OPEN SHOULDER SECTION

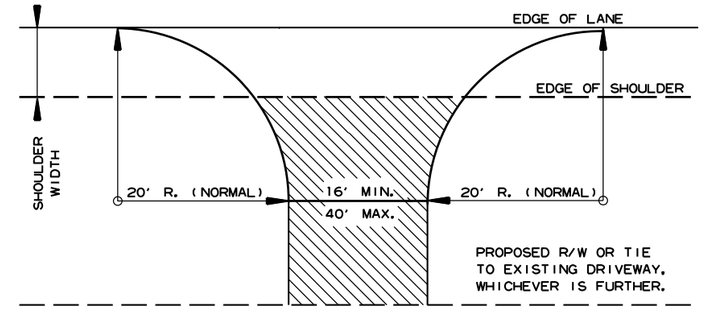

NOTE: TURNOUTS AND PRIVATE DRIVES SHALL BE MODIFIED WHERE NECESSARY TO MEET LOCAL CONDITIONS AS DIRECTED BY THE ENGINEER.

ACHM SURFACE COURSE (1/2") (220 LBS. PER SQ. YD.) AND AGGREGATE BASE COURSE (CLASS 7) 7" COMP. DEPTH IF ASPHALT OR GRAVEL DRIVE EXISTING; OR 6" CONCRETE IF CONCRETE DRIVE EXISTING.

DETAIL FOR DRIVEWAY TURNOUTS OPEN SHOULDER SECTION (ARTERIALS)

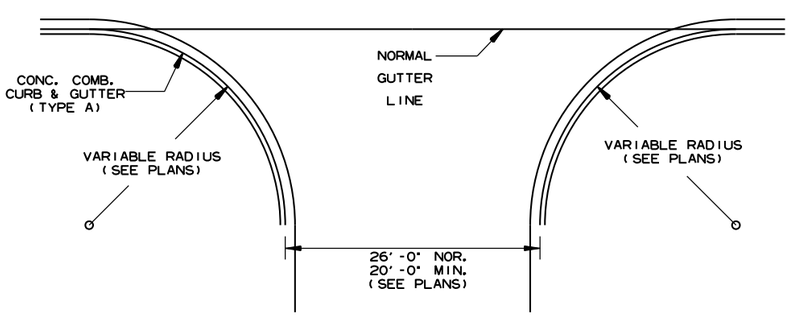

NOTE:
PAVEMENT STRUCTURE FOR STATE HIGHWAYS, CITY STREETS, & COUNTY ROADS TO BE SAME AS MAIN LANES.

DETAIL OF TURNOUTS, ASPHALT STREETS, COUNTY ROADS & STATE HIGHWAYS CURB & GUTTER SECTION

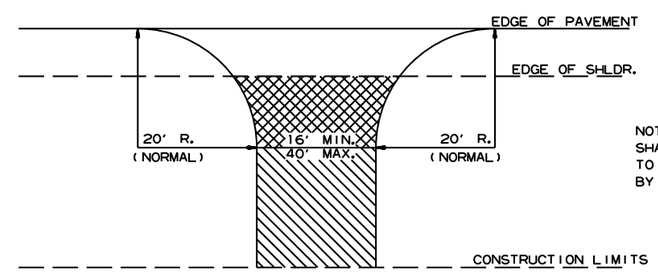

NOTE: TURNOUTS AND PRIVATE DRIVES SHALL BE MODIFIED WHERE NECESSARY TO MEET LOCAL CONDITIONS AS DIRECTED BY THE ENGINEER.

ASPHALT CONCRETE HOT MIX SURFACE COURSE (220 LBS. PER SQ. YD.) AGGREGATE BASE COURSE (CLASS 7) 7" COMP. DEPTH IF ASPHALT DRIVE EXIST OR 6" CONCRETE IF CONCRETE DRIVE EXIST.

AGGREGATE BASE COURSE (CLASS 7) 9" COMP. DEPTH OR CONFORM TO EXISTING DRIVEWAY

DETAIL FOR DRIVEWAY TURNOUTS (COLLECTORS)

DATE REV	DATE FILMED	DESCRIPTION
5-19-22		ISSUED

ARKANSAS STATE HIGHWAY COMMISSION

DETAILS OF DRIVEWAYS & STREET TURNOUTS

STANDARD DRAWING DR-2

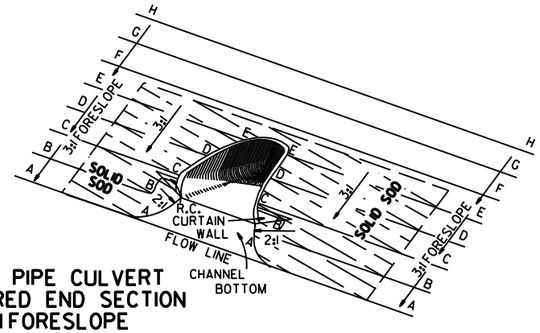

TYPICAL PIPE CULVERT
WITH FLARED END SECTION
& 3:1 FORESLOPE

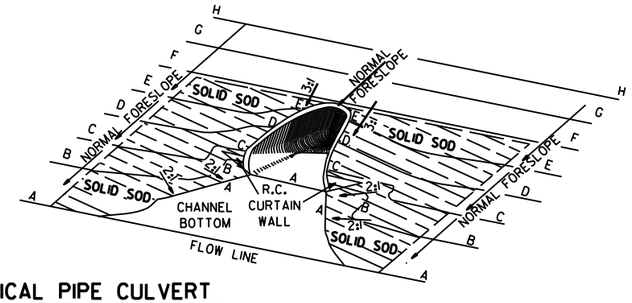

TYPICAL PIPE CULVERT
WITH FLARED END SECTION
& FLATTENED ADJACENT SLOPES

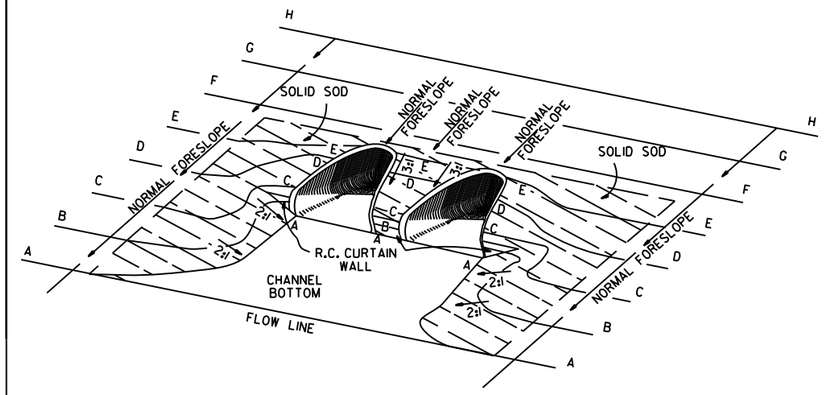

TYPICAL MULTIPLE PIPE CULVERT
WITH FLARED END SECTIONS
& FLATTENED ADJACENT SLOPES

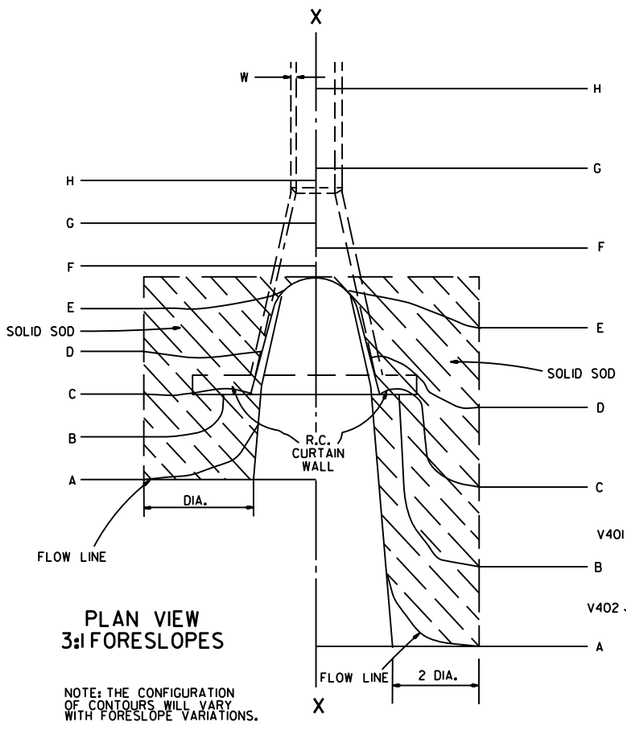

PLAN VIEW
3:1 FORESLOPES

NOTE: THE CONFIGURATION OF CONTOURS WILL VARY WITH FORESLOPE VARIATIONS.

PLAN VIEW
FLATTENED FORESLOPES

R.C. CURTAIN WALL DIMENSIONS & QUANTITIES

PIPE DIA.	H_1	L_1	L	L (DBL.)/2	SINGLE R.C.P.C. CONC.	SINGLE R.C.P.C. REINF. STEEL	DOUBLE R.C.P.C. CONC.	DOUBLE R.C.P.C. REINF. STEEL
					CU. YDS.	LBS.	CU. YDS.	LBS.
18"	11½"	3'-5"	8'-0"	6'-3"	0.31	27.7	0.45	39.5
24"	1'-0½"	4'-6"	9'-6"	7'-6"	0.37	33.4	0.53	48.0
30"	1'-3½"	5'-7"	11'-0"	9'-0"	0.45	39.0	0.67	59.0
36"	1'-7"	6'-8"	13'-0"	10'-6"	0.58	52.6	0.83	73.9
42"	2'-1½"	7'-3"	15'-6"	12'-0"	0.82	77.1	1.10	100.7
48"	2'-5"	7'-10"	17'-0"	13'-0"	0.98	94.9	1.27	120.4
54"	2'-9½"	8'-5"	18'-6"	14'-0"	1.16	115.8	1.47	143.7
60"	3'-4"	9'-0"	20'-6"	15'-6"	1.47	149.7	1.84	180.3
72"	4'-5"	10'-2"	25'-6"	18'-6"	2.31	232.6	2.73	271.0

NOTE: QUANTITIES SHOWN ARE FOR ONE (1) CURTAIN WALL.

REINFORCING STEEL SCHEDULE

PIPE DIA.	SINGLE R.C. PIPE CULVERT H401 L	H401 NO.	H402 L	H402 NO.	V401 L	V401 NO.	V402 L	V402 NO.	DOUBLE R.C. PIPE CULVERT H401 L	H401 NO.	H402 L	H402 NO.	H403 L	H403 NO.	V401 L	V401 NO.	V402 L	V402 NO.
18"	7'-8"	2	1'-11½"	4	1'-7½"	8	8"	8	12'-2"	2	1'-11½"	4	8"	2	1'-7½"	10	8"	14
24"	9'-2"	2	2'-2"	4	1'-8½"	10	8"	9	14'-8"	2	2'-2"	4	8"	2	1'-8½"	12	8"	18
30"	10'-8"	2	2'-4½"	4	1'-11½"	10	8"	12	17'-8"	2	2'-4½"	4	8"	2	1'-11½"	14	8"	22
36"	12'-8"	2	2'-10"	6	2'-3"	12	8"	14	20'-8"	2	2'-10"	6	8"	3	2'-3"	14	8"	28
42"	15'-2"	2	3'-9½"	8	2'-9½"	16	8"	15	23'-8"	2	3'-9½"	8	8"	4	2'-9½"	18	8"	30
48"	16'-8"	2	4'-3"	10	3'-1"	18	8"	16	25'-8"	2	4'-3"	10	8"	5	3'-1"	20	8"	32
54"	18'-2"	2	4'-8½"	12	3'-5½"	20	8"	17	27'-8"	2	4'-9"	12	8"	6	3'-5½"	22	8"	34
60"	20'-2"	2	5'-5"	14	4'-0"	24	8"	18	30'-8"	2	5'-5"	14	8"	7	4'-0"	26	8"	36
72"	25'-2"	2	7'-4"	18	5'-1"	30	8"	20	36'-8"	2	7'-4"	18	8"	9	5'-1"	33	8"	40

ALL REINFORCING STEEL #4 BARS @ 6" O.C.

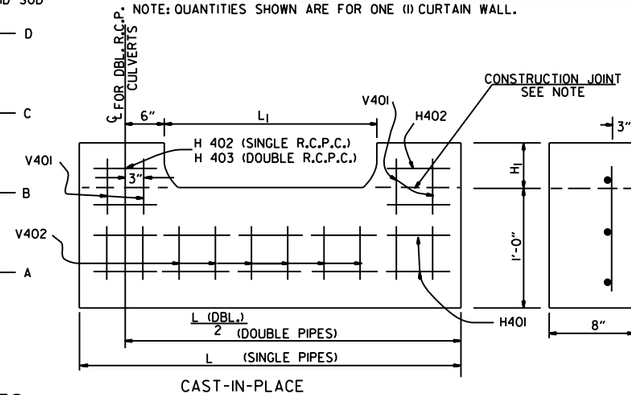

CAST-IN-PLACE

NOTE: THE PORTION OF THE R.C. CURTAIN WALL BENEATH THE FLARED END SECTION (LOWER 1'-0") SHALL BE PLACED MONOLITHICALLY. THE FLARED END SECTION SHALL THEN BE SET IN PLACE & THE REMAINING PORTIONS OF THE R.C. CURTAIN WALL PLACED.

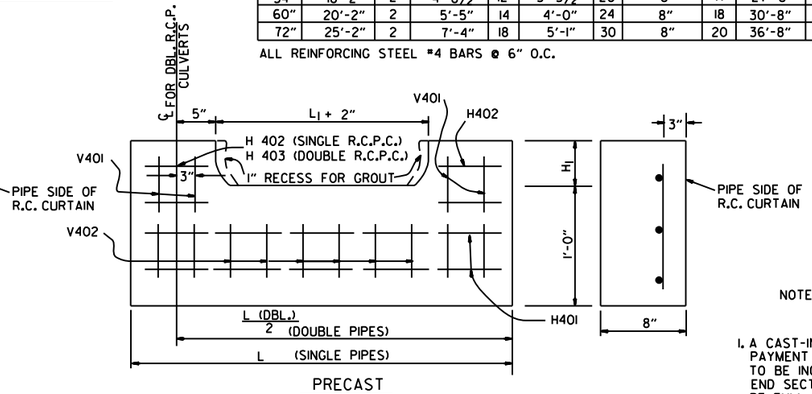

PRECAST

NOTE: THE PRECAST CURTAIN WALL WILL BE SET AND BACKFILLED WITH COMPACTED MATERIAL. THE FLARED END SECTION SHALL THEN BE SET IN PLACE AND THE 1" RECESS FILLED WITH GROUT. WHERE "L" EXCEEDS 11' THE CURTAIN WALL MAY BE CAST IN TWO (2) OR MORE SECTIONS. THE METHOD OF JOINING THE SECTIONS FOR INSTALLATION SHALL BE APPROVED BY THE ENGINEER.

R.C. CURTAIN WALL DETAILS

SOLID SODDING

PIPE DIA.	SINGLE R.C.P.C. 3:1	SINGLE R.C.P.C. 4:1	SINGLE R.C.P.C. 6:1	DOUBLE R.C.P.C. 3:1	DOUBLE R.C.P.C. 4:1	DOUBLE R.C.P.C. 6:1
	SQ. YDS.			SQ. YDS.		
18"	5	7	12	6	8	13
24"	8	12	19	9	13	20
30"	13	18	29	14	19	30
36"	17	26	41	18	28	43
42"	23	35	55	25	37	57
48"	29	46	68	31	48	70
54"	35	57	85	37	59	87
60"	45	62	104	48	65	107
72"	64	92	156	67	95	159

NOTE: QUANTITIES SHOWN ABOVE ARE FOR ONE (1) END OF F.E.S.

GENERAL NOTES

1. A CAST-IN-PLACE OR PRECAST CURTAIN WALL MAY BE USED. PAYMENT FOR THE CURTAIN WALL SHALL BE CONSIDERED TO BE INCLUDED IN THE UNIT PRICE BID EACH FOR FLARED END SECTIONS OF THE SEVERAL SIZES, WHICH PRICE SHALL BE FULL COMPENSATION FOR FURNISHING ALL MATERIALS INCLUDING REINFORCING STEEL AND CONCRETE; FOR FORMS, MIXING AND PLACING; FOR EXCAVATION AND BACKFILL, AND FOR ALL LABOR, TOOLS, EQUIPMENT AND INCIDENTALS NECESSARY TO COMPLETE THE WORK.
2. ALL EXPOSED EDGES SHALL BE CHAMFERED ¾".
3. CONCRETE FOR CURTAIN WALL SHALL MEET THE REQUIREMENTS FOR CLASS A OR S CONCRETE AS PROVIDED IN SECTION 802 OF THE STANDARD SPECIFICATIONS OR FOR PAVING CONCRETE AS PROVIDED IN SECTION 501 OF THE STANDARD SPECIFICATIONS.
4. WELDED WIRE MESH 3 x 3 W/10 x W10 MAY BE USED IN LIEU OF REINFORCING BARS.

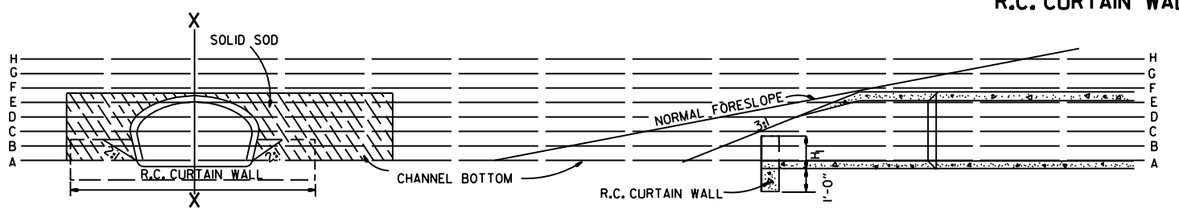

END VIEW

SECTIONAL VIEW "X-X"

DATE	REVISION	FILMED
10-18-96	ADDED NOTE TO SOLID SODDING	
10-12-95	CORRECTED SPELLING	
11- 3-94	ADDED GENERAL NOTE NO. 4	
8-15-91	REV. CURTAIN WALL QUANT. STEEL SCH. & SOLID SOD QUANT.	
3-2-81	ALLOW PRECAST IN 2 OR MORE PIECES CHAMFER EDGES	
5-15-80	ADDED PRECAST WALL & GENERAL NOTES	
10-2-72	REVISED AND REDRAWN	

ARKANSAS STATE HIGHWAY COMMISSION

FLARED END SECTION

STANDARD DRAWING FES-1

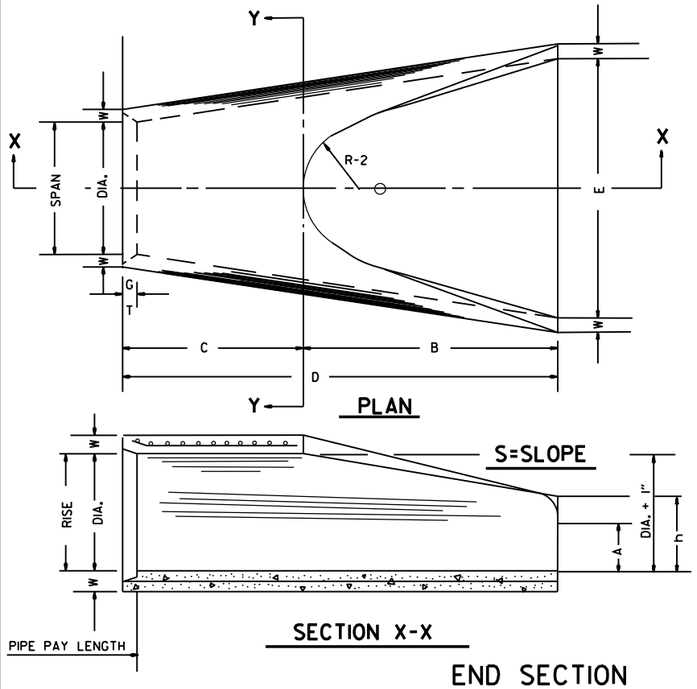

TABLE OF DIMENSIONS

DIA.	WALL	A	B	C	D	E	S	DIA. + 1"	P	R-1	R-2	G-T	WT.	h
18"	2½"	9"	2'-3"	3'-10"	6'-1"	3'-0"	3:1	19"	29"	15½"	12"	2"	1000	1'-0½"
24"	3"	9½"	3'-7½"	2'-6"	6'-1½"	4'-0"	3:1	25"	33 3/16"	16 15/16"	14"	2½"	1600	1'-1½"
30"	3½"	1'-0"	4'-6"	1'-7¾"	6'-1¾"	5'-0"	3:1	31"	37"	18½"	15"	3¼"	1940	1'-4⅝"
36"	4"	1'-3"	5'-3"	2'-10¾"	8'-1¾"	6'-0"	3:1	37"	47 13/16"	24 5/16"	20"	3½"	4100	1'-8"
42"	4½"	1'-9"	5'-3"	2'-11"	8'-2"	6'-6"	3:1	43"	53⅞"	27½"	22"	3½"	5380	2'-2½"
48"	5"	2'-0"	6'-0"	2'-2"	8'-2"	7'-0"	3:1	49"	56½"	28½"	22"	3½"	6550	2'-6"
54"	5½"	2'-4"	6'-6"	1'-10"	8'-4"	7'-6"	3:1	55"	65½"	33⅛"	24"	4"	8750	2'-10½"
60"	6"	2'-10"	6'-6"	1'-10"	8'-4"	8'-0"	3:1	61"	72½"	36 11/16"	24"	4"	9270	3'-5"
72"	7"	3'-10"	6'-6"	1'-10"	8'-4"	9'-0"	3:1	73"	77 13/16"	38 15/16"	24"	5"	13250	4'-6"

ARCH PIPE

EQUIV. DIA.	• SPAN AASHTO M 206	• SPAN AHD NOMINAL	• RISE AASHTO M 206	• RISE AHD NOMINAL	W	A	B	C	D	E	P	R2	G-T	S
INCHES														
15	18	18	11	11	2"	4"	2'-0"	4'-0"	6'-0"	3'-0"	29"	12"	1½"	2½:1
18	22	22	13½	14	2½"	5"	2'-0"	4'-1"	6'-1"	3'-6"	32⅛"	13"	2½"	2½:1
21	26	26	15½	16	2¾"	7"	2'-3"	3'-10"	6'-1"	4'-0"	34⅛"	14"	2½"	2½:1
24	28½	29	18	18	3"	9"	2'-3"	3'-10"	6'-1"	5'-0"	36 11/16"	15"	2½"	2½:1
30	36¼	36	22½	23	3½"	10"	3'-1"	3'-0½"	6'-1½"	6'-0"	47 11/16"	20"	3"	2½:1
36	43¾	44	26⅝	27	4"	10½"	4'-0"	2'-11½"	6'-1½"	6'-6"	54 5/16"	22"	3½"	2½:1
42	51⅛	51	31 5/16	31	4½"	11½"	4'-7"	1-10¼"	6'-5¼"	7'-2"	59½"	23"	3¾"	2½:1
48	58½	59	36	36	5"	1'-3"	5'-3"	2'-10¾"	8'-1¾"	7'-10"	70 5/16"	24"	4¼"	2½:1
54	65	65	40	40	5½"	1'-7"	5'-3"	2'-11"	8'-2"	8'-6"	72 1/16"	24"	4¾"	2¼:1
60	73	73	45	45	6"	1'-10"	5'-6"	2'-8"	8'-2"	9'-0"	77 13/16"	24"	5"	2¼:1

• THE MEASURED SPAN AND RISE SHALL NOT VARY MORE THAN ± 2 PER CENT FROM THE VALUES SPECIFIED BY AASHTO M 206.

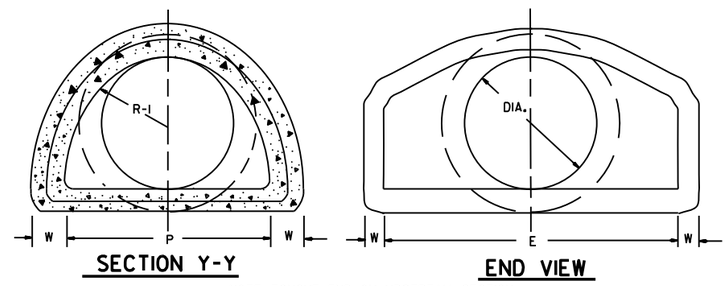

NOTE: TONGUE END ON UPSTREAM SECTION
GROOVE END ON DOWNSTREAM SECTION

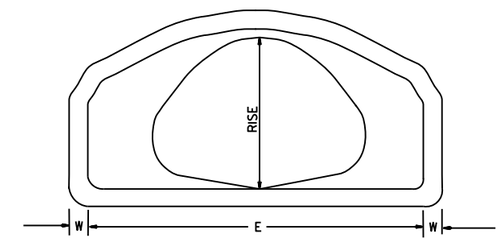

END VIEW
CONCRETE ARCH PIPE

END SECTION FOR REINFORCED CONCRETE PIPE CULVERTS

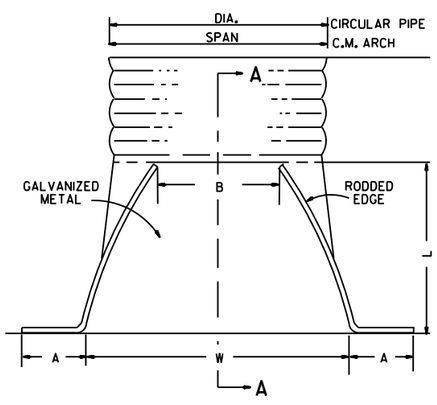

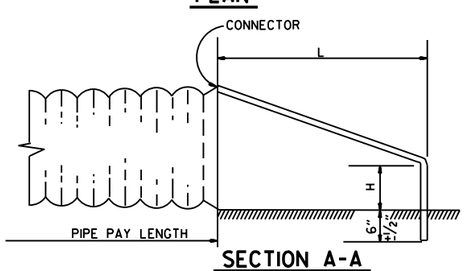

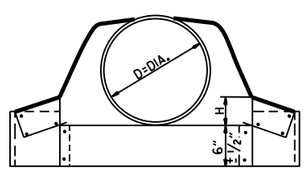

CIRCULAR PIPE

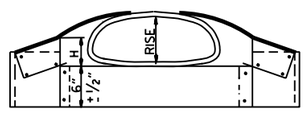

C.M. ARCH PIPE

CIRCULAR PIPE

D. DIA.	GAUGE	A 1" ±	B. MAX.	H 1" ±	L 1½" ±	W 2" ±	S
		INCHES					
12	16	6	6	6	21	24	2½:1
15	16	7	8	6	26	30	2½:1
18	16	8	10	6	31	36	2½:1
21	16	9	12	6	36	42	2½:1
24	16	10	13	6	41	48	2½:1
30	14	12	16	8	51	60	2½:1
36	14	14	19	9	60	72	2½:1
42	12	16	22	11	69	84	2½:1
48	12	18	27	12	78	90	2½:1
54	12	18	30	12	84	102	2:1
60	12	18	33	12	87	114	1¾:1
66	12	18	36	12	87	120	1½:1
72	12	18	39	12	87	126	1 1/3:1

C.M. ARCH PIPE

EQUIV. DIA.	SPAN	RISE	A 1" ±	B MAX.	H 1" ±	L 1½" ±	W 2" ±	S	GAUGE
	INCHES								
15"	17	13	7	9	6	19	30	2½:1	16
18"	21	15	7	10	6	23	36	2½:1	16
21"	24	18	8	12	6	28	42	2½:1	16
24"	28	20	9	14	6	32	48	2½:1	16
30"	35	24	10	16	6	39	60	2½:1	14
36"	42	29	12	18	8	46	75	2½:1	14
42"	49	33	13	21	9	53	85	2½:1	12
48"	57	38	18	26	12	63	90	2½:1	12
54"	64	43	18	30	12	70	102	2¼:1	12
60"	71	47	18	33	12	77	114	2¼:1	12

NOTE: ALTERNATE CONNECTIONS TO THE PIPE CULVERTS, IN ACCORDANCE WITH MANUFACTURER'S STANDARD PRACTICES, MAY BE MADE SUBJECT TO THE APPROVAL OF THE ENGINEER.

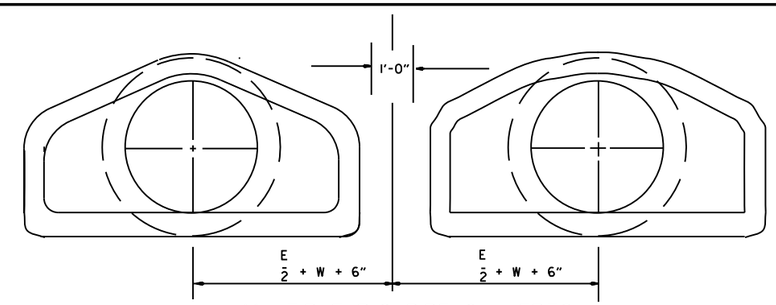

MULTIPLE R.C. PIPE CULVERTS

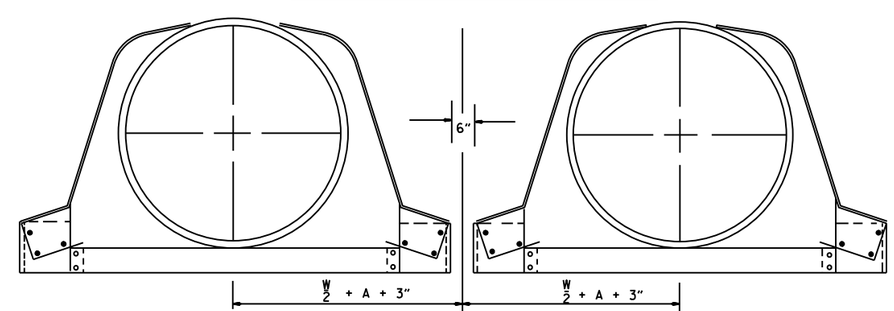

MULTIPLE C.M. PIPE CULVERTS

END SECTIONS FOR CORRUGATED METAL PIPE CULVERTS

DATE	REVISION	FILMED
10-18-96	REVISED ASTM REF. TO AASHTO	
5-15-80	REVISED DISTANCE BETWEEN MULTIPLE R.C.P. F.E.S.	664-5-15-80
7-14-78	C.M. ARCH SIZES TO CONFORM WITH AASHTO SIZES	752-7-14-78
8-22-75	ADDED MULTIPLE PIPE CULVERTS	517-8-22-75
12-5-74	REMOVED NOTE RE REINF. FOR R.C. F.E.S.	500-12-5-74
5-24-73	CMP END SECTION, SHOW PIPE PAY LENGTH	627-5-24-73
10-2-72	REVISED AND REDRAWN	760-10-2-72

ARKANSAS STATE HIGHWAY COMMISSION

FLARED END SECTION

STANDARD DRAWING FES-2

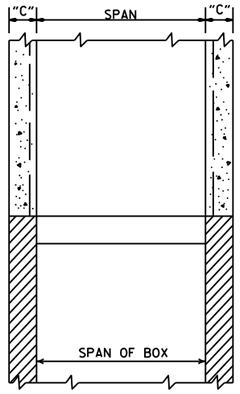

SECTION B-B

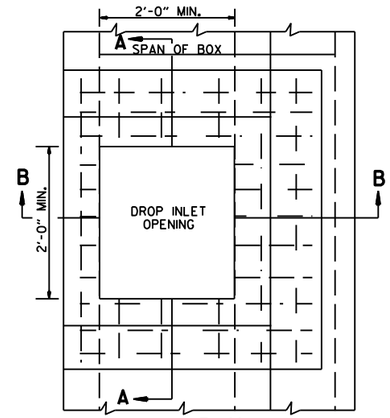

PLAN

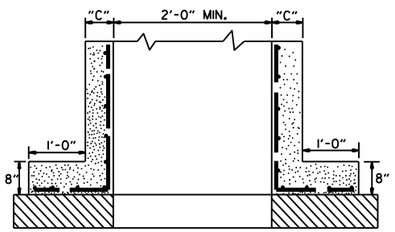

SECTION A-A

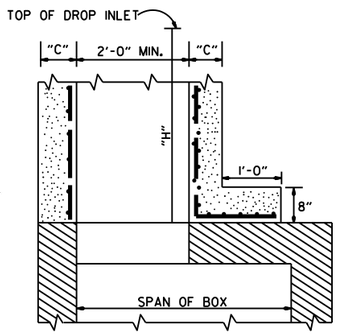

SECTION B-B

METHOD OF CONSTRUCTING DROP INLET ON EXISTING R.C. BOX CULVERT

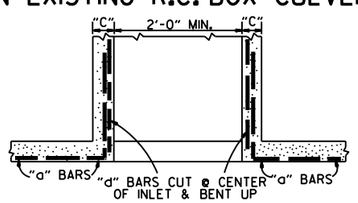

SECTION A-A

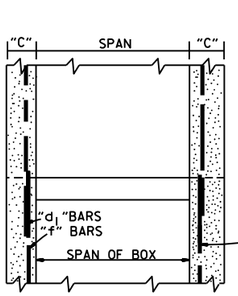

SECTION B-B

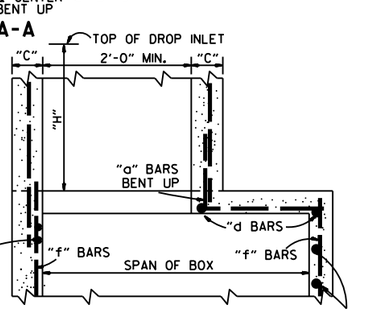

SECTION B-B

METHOD OF CONSTRUCTING DROP INLET ON NEW R.C. BOX CULVERT

NOTE: "C" DIMENSIONS AND REINFORCING BAR SIZES, SHALL CONFORM TO THOSE SHOWN ON STANDARD DRAWING FOR DROP INLET.

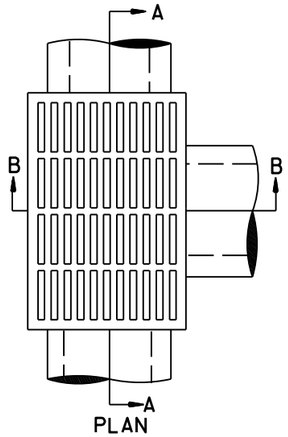

PLAN

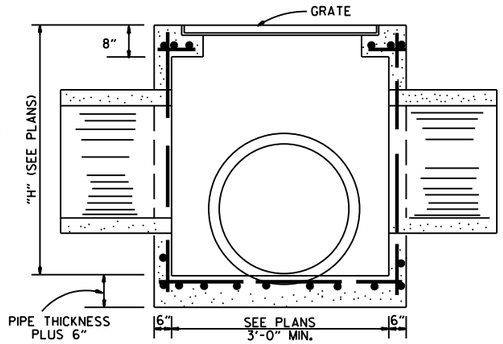

SECTION A-A

NOTE: REINF. BARS TO BE #4 BARS ON 6" CTRS. WITH 1½" MIN. COVER. THIS TYPE DROP INLET TO BE USED WHERE NOT SUBJECTED TO TRAFFIC.

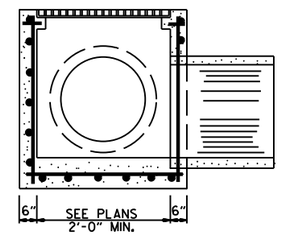

SECTION B-B

DROP INLET (TYPE E)

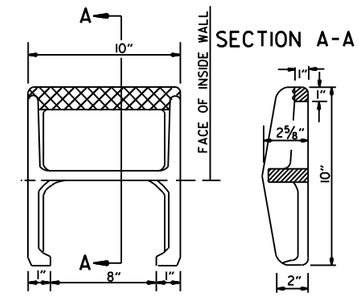

SECTION A-A

APPROX. WEIGHT = 11 LBS. (CAST IRON)

PLAN

NOTE: THIS DETAIL IS TYPICAL. OTHERS MAY BE USED WITH PRIOR APPROVAL OF THE ENGINEER.

DETAIL OF STEP FOR DROP INLET

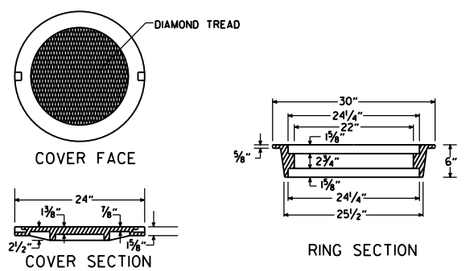

APPROXIMATE TOTAL WEIGHT = 333 LBS.

HEAVY DUTY RING & COVER

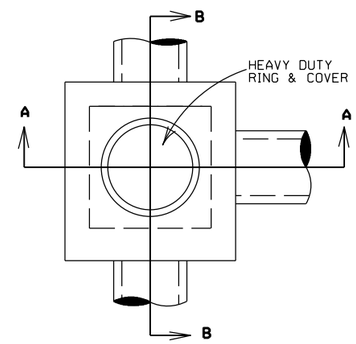

PLAN

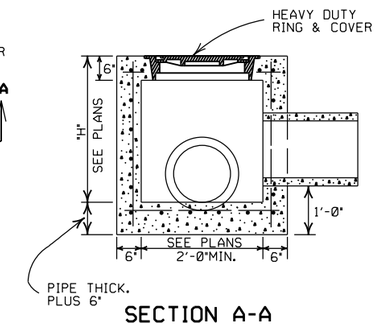

SECTION A-A

NOTE: REINF. BARS TO BE #4 BARS ON 6" CTRS. WITH 1½" MIN. COVER. THIS TYPE JUNCTION BOX TO BE USED WHERE NOT SUBJECTED TO TRAFFIC.

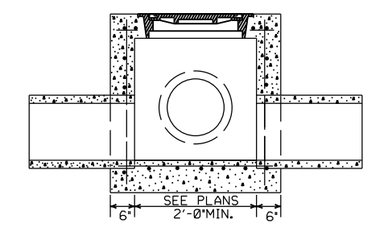

SECTION B-B

JUNCTION BOX (TYPE E)

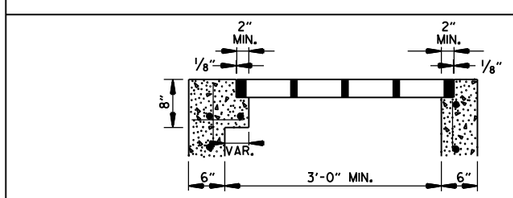

SECTION A-A

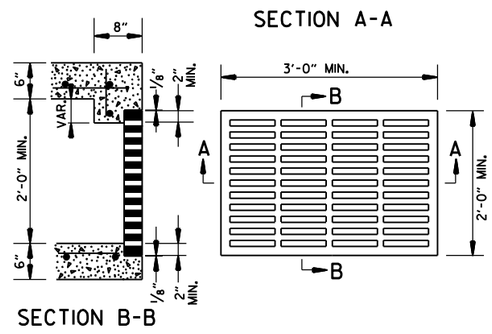

SECTION B-B

APPROXIMATE MINIMUM WATERWAY OPENING = 260 SQ. IN.

GRATE FOR TYPE E DROP INLET

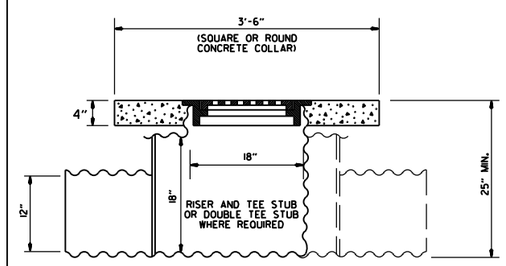

NOTE: CONCRETE COLLAR TO BE CAST IN PLACE. 12" PIPE CULVERTS TO BE MEASURED AND PAID FOR AS " 12" SIDE DRAIN ".

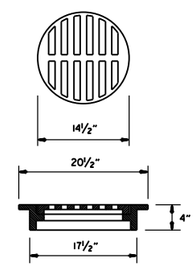

USE NEENAH R-5901-C OR EQUIVALENT BICYCLE SAFE FRAME AND GRATE

DETAIL OF YARD DRAIN

GENERAL NOTES:

1. ALL EXPOSED CORNERS SHALL BE ¾" CHAMFERED.
2. STEPS SHALL BE INSTALLED ON 16" CENTERS ON ALL INLETS 4'-0" HIGH OR OVER, OR AS APPROVED BY THE ENGINEER.
3. EXPANSION JOINT MATERIAL SHALL BE ¾" PREFORMED FIBER.
4. GRATE OR GRATE AND FRAME SHALL BE CONSTRUCTED OF CAST IRON AND SHALL CONFORM TO THE REQUIREMENTS OF THE STANDARD SPECIFICATIONS FOR GRAY IRON CASTINGS AASHTO M 105 CLASS 35B. GRATE MAY BE USED WITHOUT FRAME.
5. GRATE AND FRAME SHALL NOT BE PAINTED.
6. GRATE SHALL BE BICYCLE SAFE.
7. HEAVY DUTY RING SHALL ALWAYS BE INSTALLED WITH FLANGE ON TOP.
8. HEAVY DUTY RING AND COVER SHALL BE CONSTRUCTED OF CAST IRON AND SHALL CONFORM TO THE REQUIREMENTS OF THE STANDARD SPECIFICATIONS FOR GRAY IRON CASTINGS AASHTO M105 CLASS 35B & AASHTO M306.
9. HEAVY DUTY RING AND COVER SHALL NOT BE PAINTED.
10. DIMENSIONS SHOWN FOR RING AND COVER ARE TYPICAL. THE CONTRACTOR MAY SUBSTITUTE SIMILAR CASTINGS WITH THE APPROVAL OF THE ENGINEER. REQUESTING APPROVAL FOR CASTING DESIGNS MAY BE MADE BY REFERRING TO PREVIOUSLY APPROVED DRAWINGS.

DATE REV.	REVISION	DATE FILMED
11-16-01	ADDED NOTE 10	
1-12-00	REVISED HEAVY DUTY RING & COVER	
7-02-98	CHANGED GRATE DETAIL. DELETED DI(TYPE D), REPLACED RING & COVER W/HEAVY DUTY RING & COVER, ADDED JUNCTION BOX (TYPE E)	
6-26-97	ADDED DIMENSION TO TYPE IV-A	
10-18-96	ADDED DETAIL OF YARD DRAIN	
8-15-91	DELETE TYPE IV GRATE	
7-15-88	REVISED STEP DETAIL	
5-20-83	REVISED DETAILS OF GRATES (TYPE IV & IV-A)	
2-4-83	ADDED GENERAL NOTE NO. 4	
3-2-81	ADDED TYPE IV-A GRATE	
5-22-74	DELETED INLET (TYPE F) & GRATE (TYPE III)	
10-2-72	REVISED AND REDRAWN	

ARKANSAS STATE HIGHWAY COMMISSION

DETAILS OF DROP INLETS & JUNCTION BOXES

STANDARD DRAWING FPC-9

NOTE: WHEN AN INLET IS PLACED ADJACENT TO CONCRETE PAVEMENT, THE GUTTER DEPRESSION SHALL BE FORMED IN CONCRETE PAVEMENT.

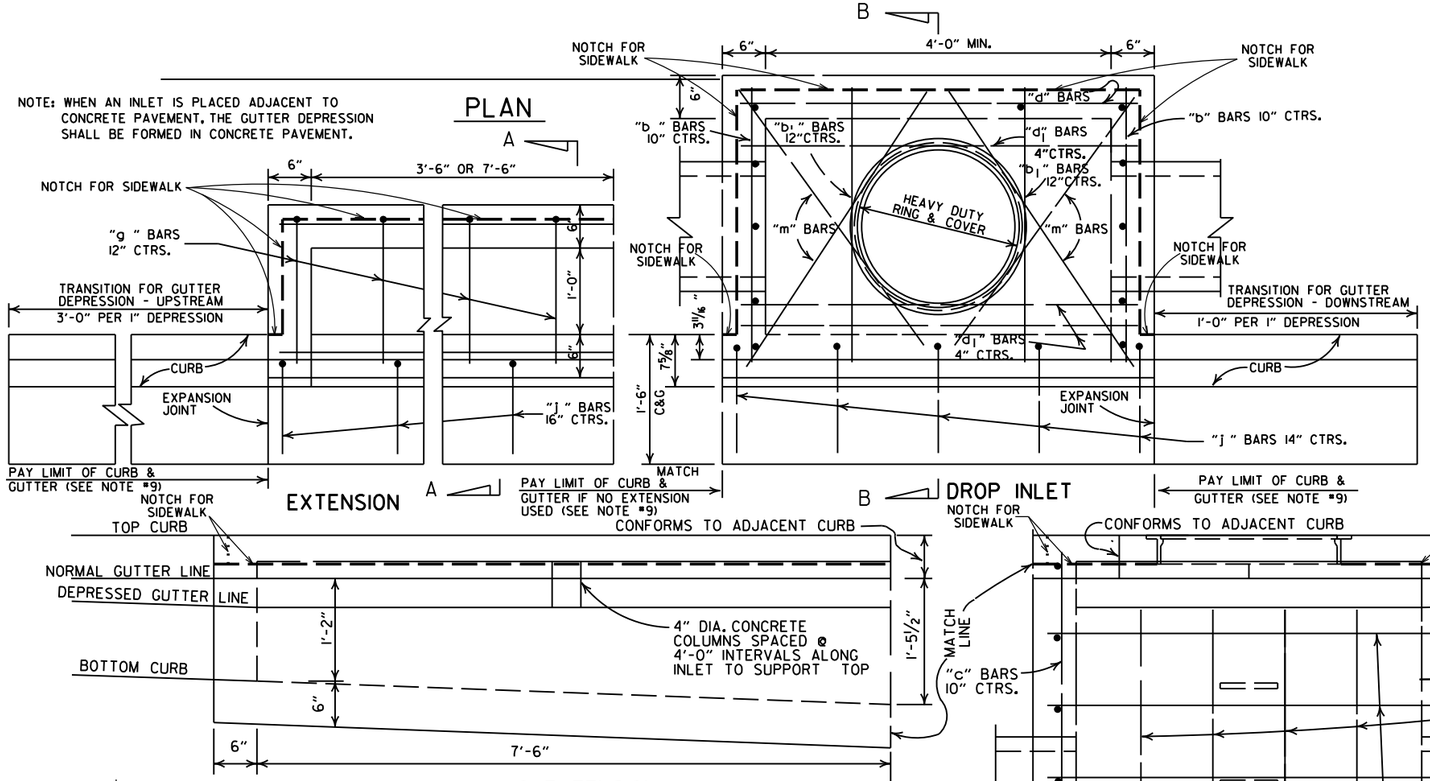

4'-0" LENGTH DROP INLET / DROP INLET EXTENSION

PIPE SIZE	MIN. WIDTH	HEIGHT 5'-0" CLASS A CONC.	HEIGHT 5'-0" REINF. STEEL	PLUS OR MINUS PER LIN. FT. OF HEIGHT CLASS A CONC.	PLUS OR MINUS PER LIN. FT. OF HEIGHT REINF. STEEL	4'-0" CLASS A CONC.	4'-0" REINF. STEEL	8'-0" CLASS A CONC.	8'-0" REINF. STEEL
		CU. YDS.	POUNDS	CU. YDS.	POUNDS	CU. YDS.	POUNDS	CU. YDS.	POUNDS
18"	2'-6"	1.77	156	0.28	22	0.58	38	0.87	72
24"	2'-6"	1.79	156	0.28	22				
30"	3'-2"	2.39	205	0.30	26				
36"	3'-8"	2.63	236	0.32	28	DEDUCT FROM QUANTITY COMPUTED FOR EACH EXTENSION ADDED.			
42"	4'-4"	2.95	250	0.34	30				
48"	4'-10"	3.21	265	0.36	32				
						0.04	3		

NOTE: QUANTITIES ARE APPROXIMATE AND ARE SHOWN FOR BIDDER INFORMATION ONLY.

DEDUCT FROM QUANTITY COMPUTED FOR EACH PIPE ENTERING INLET

INSIDE DIA. PIPE	CLASS A CONC.	REINF. STEEL
INCHES	CU. YDS.	POUNDS
18	0.05	2
24	0.09	3
30	0.13	4
42	0.24	8

BAR DIAGRAM

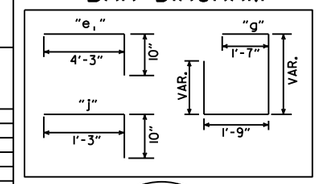

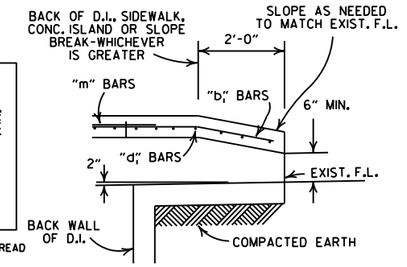

BACK OPENING

WHEN OPENING IN BACK IS CALLED FOR ON PLANS EXTEND OPENING AS SHOWN IN DETAIL. PAYMENT TO BE INCLUDED IN PRICE BID FOR DROP INLET (TYPE C).

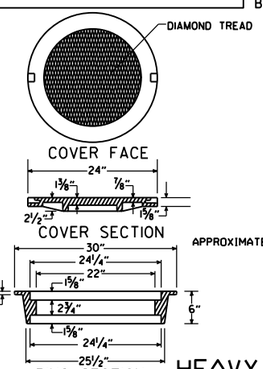

APPROXIMATE TOTAL WEIGHT = 333 LBS.

HEAVY DUTY RING & COVER

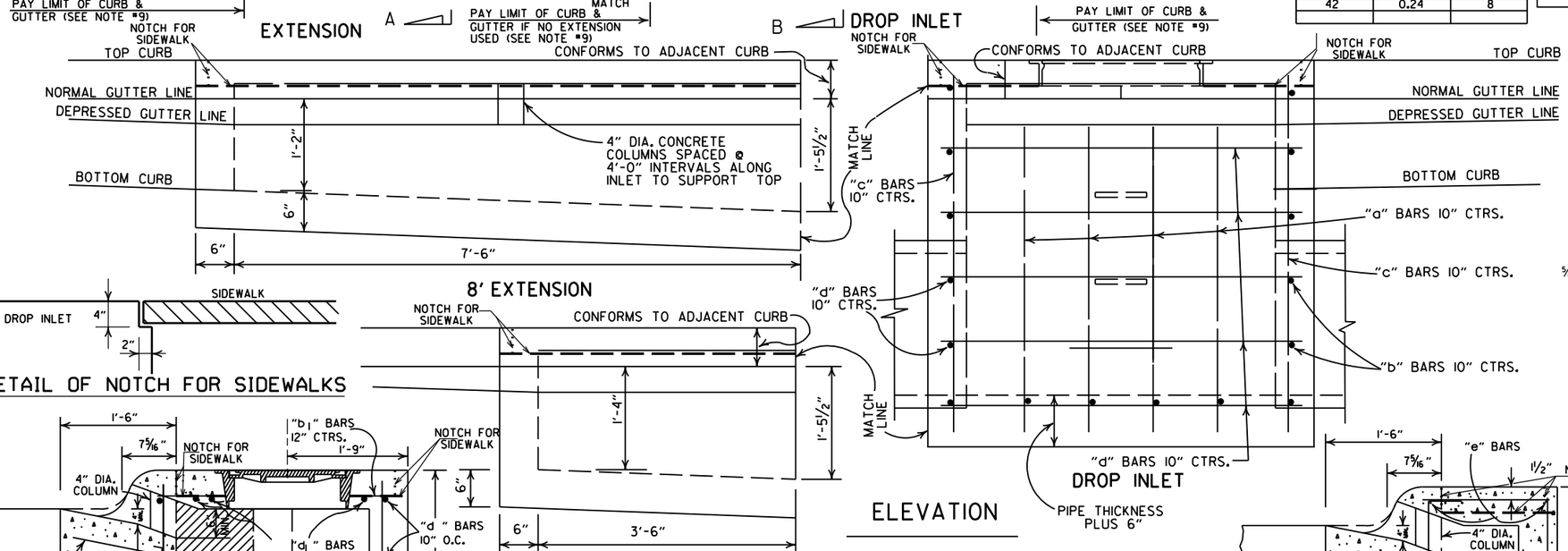

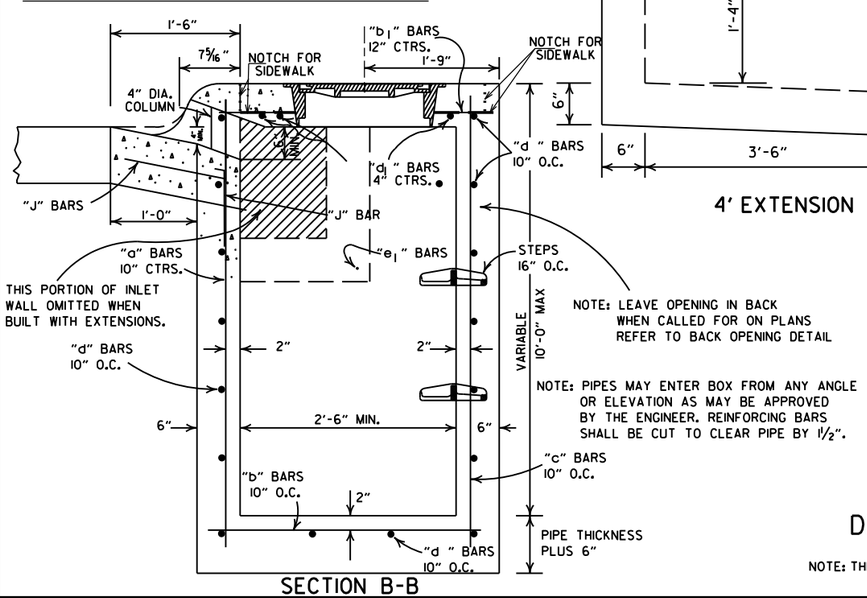

NOTE: LEAVE OPENING IN BACK WHEN CALLED FOR ON PLANS REFER TO BACK OPENING DETAIL

NOTE: PIPES MAY ENTER BOX FROM ANY ANGLE OR ELEVATION AS MAY BE APPROVED BY THE ENGINEER. REINFORCING BARS SHALL BE CUT TO CLEAR PIPE BY 1½".

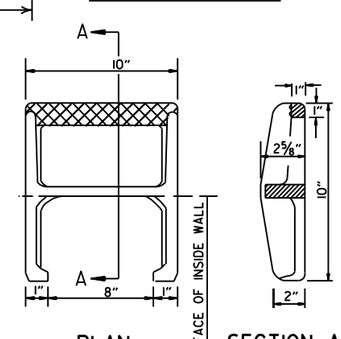

DETAIL OF STEP FOR DROP INLET

APPROX. WEIGHT = 11 LBS. (CAST IRON)

NOTE: THIS DETAIL IS TYPICAL. OTHERS MAY BE USED WITH PRIOR APPROVAL OF THE ENGINEER.

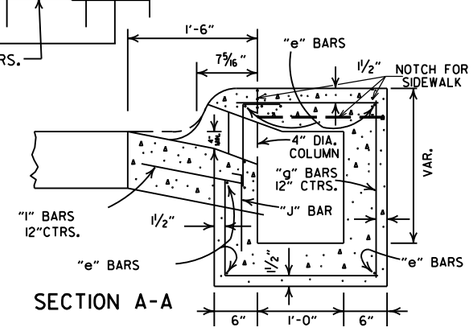

GENERAL NOTES:

1. ALL EXPOSED CORNERS TO HAVE ¾" CHAMFER.
2. STEPS SHALL BE INSTALLED IN ALL INLETS 4'-0" HIGH AND OVER OF AS APPROVED BY THE ENGINEER.
3. ALL REINF. BARS SHALL BE #4 AND HAVE 1½" COVER.
4. DROP INLETS AND EXTENSION ON CURVED SECTIONS SHALL CONFORM TO THE CURVATURE OF THE CURB.
5. THIS DROP INLET MAY BE CONSTRUCTED ON NEW OR EXISTING R.C. BOX CULVERT AS SHOWN ON F.P.C.-9.
6. WHEN PLANS CALL FOR DROP INLET OVER 10'-0" HIGH, FLOOR AND WALLS SHALL BE CONSTRUCTED AS SHOWN FOR TYPE "RM" DROP INLET (FPC-9D).
7. HEAVY DUTY RING SHALL ALWAYS BE INSTALLED WITH FLANGE ON TOP.
8. DURING CONSTRUCTION OF THE ROADWAY THE CONTRACTOR SHALL MAINTAIN DRAINAGE INTO OR AROUND THE DROP INLET AS APPROVED BY THE ENGINEER.
9. PAYMENT FOR CURB AND/OR CURB AND GUTTER WITHIN THE LIMITS OF DROP INLETS AND DROP INLET EXTENSIONS SHALL BE CONSIDERED INCLUDED IN PAYMENT MADE FOR DROP INLETS AND/OR DROP INLET EXTENSIONS.
10. HEAVY DUTY RING AND COVER SHALL BE CONSTRUCTED OF CAST IRON AND SHALL CONFORM TO THE REQUIREMENTS OF THE STANDARD SPECIFICATIONS FOR GRAY IRON CASTINGS AASHTO M105 CLASS 35B & AASHTO M306.
11. HEAVY DUTY RING AND COVER SHALL NOT BE PAINTED.
12. 4"×2" NOTCH SHALL BE FORMED IN ALL DROP INLETS TO SUPPORT SIDEWALK CONSTRUCTION. REFER TO DETAIL OF NOTCH FOR SIDEWALKS.
13. DIMENSIONS SHOWN FOR RING AND COVER ARE TYPICAL. THE CONTRACTOR MAY SUBSTITUTE SIMILAR CASTINGS WITH THE APPROVAL OF THE ENGINEER. REQUESTING APPROVAL FOR CASTING DESIGNS MAY BE MADE BY REFERRING TO PREVIOUSLY APPROVED DRAWINGS.

DATE REV.	REVISION	DATE FILMED
8-22-02	ADDED PAY LIMIT CURB NOTES TO SECTIONS A-A & B-B	
11-16-01	ADDED NOTE 13; REVISED SECTION B-B	
1-12-00	CORRECTED DIMENSION ON SECTION B-B & REVISED RING & COVER	
5-13-99	ADDED DETAIL OF NOTCH FOR SIDEWALKS	
7-02-98	REPLACED RING & COVER W/HEAVY DUTY RING & COVER ADDED NOTES 9,10,&11	
10-18-96	CORRECTED SPELLING	
4-26-96	ADDED NOTE 8 & REVISED (4')(8') EXTENSION TITLES	10-18-96
4-1-93	REVISED BACK OPENING & NOTE	
8-15-91	DELETE TYPE IV GRATE	
7-15-88	REVISED STEP DETAIL	
5-20-83	REVISED DETAILS OF GRATES (TYPE IV & IV-A)	
2-4-83	ADDED GENERAL NOTE NO. 4	
3-2-81	ADDED TYPE IV-A GRATE	
5-22-74	DELETED INLET (TYPE F) & GRATE (TYPE III)	
10-2-72	REVISED AND REDRAWN	

ARKANSAS STATE HIGHWAY COMMISSION

DETAILS OF DROP INLETS (TYPE C)

STANDARD DRAWING FPC-9E

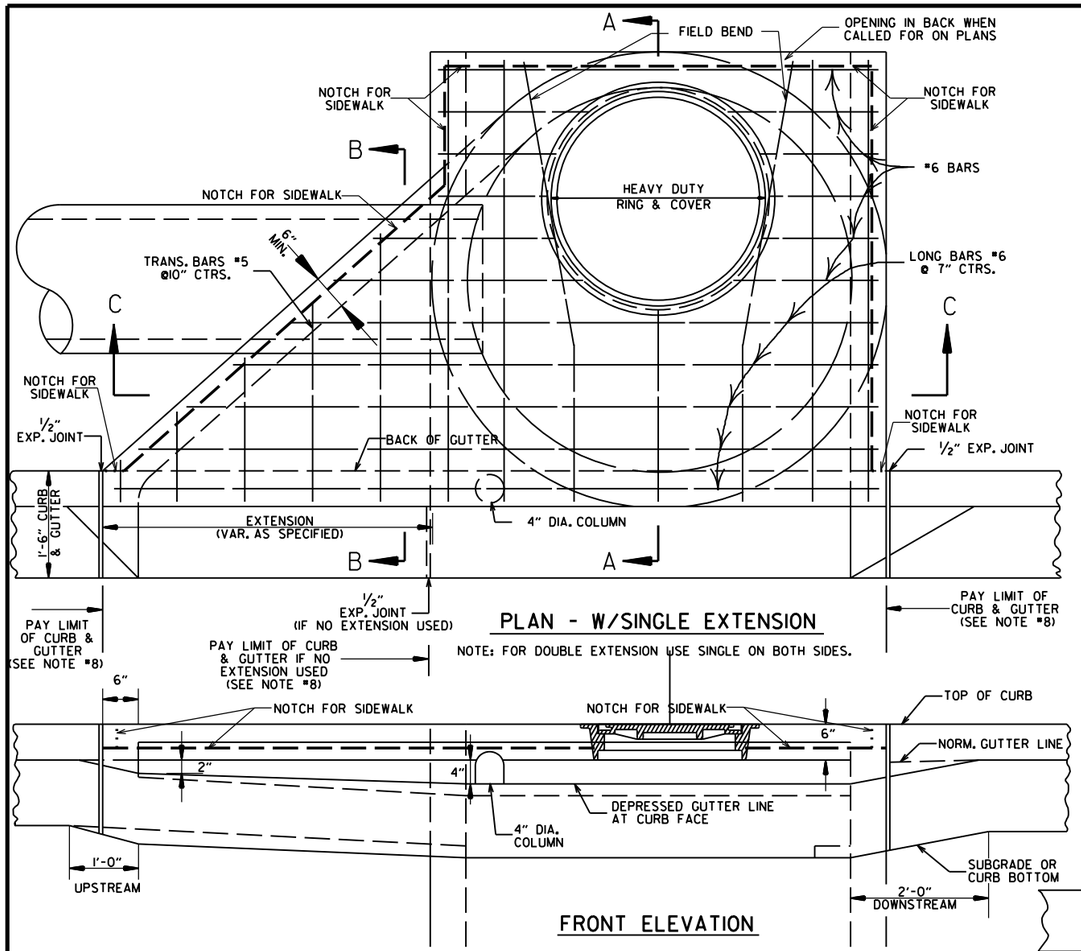

PLAN - W/SINGLE EXTENSION

NOTE: FOR DOUBLE EXTENSION USE SINGLE ON BOTH SIDES.

FRONT ELEVATION

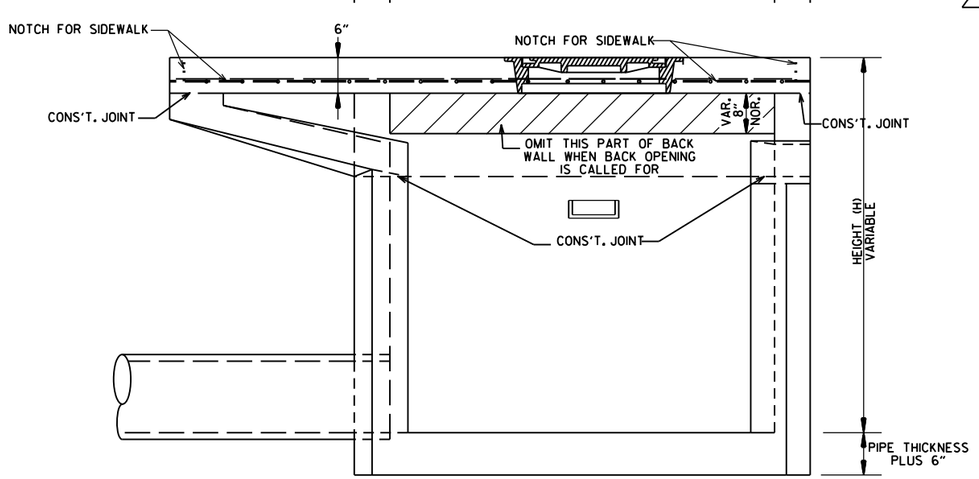

SECTION C-C

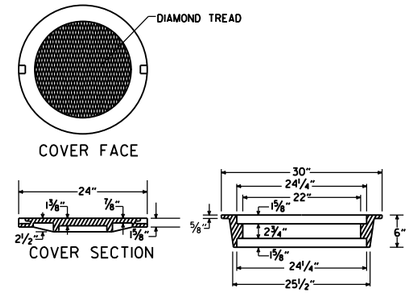

APPROXIMATE TOTAL WEIGHT = 333 LBS.

HEAVY DUTY RING & COVER

1. HEAVY DUTY RING AND COVER SHALL BE CONSTRUCTED OF CAST IRON AND SHALL CONFORM TO THE REQUIREMENTS OF THE STANDARD SPECIFICATIONS FOR GRAY IRON CASTINGS AASHTO M105 CLASS 35B & AASHTO M306.
2. HEAVY DUTY RING AND COVER SHALL NOT BE PAINTED.
3. HEAVY DUTY RING SHALL ALWAYS BE INSTALLED WITH FLANGE ON TOP.

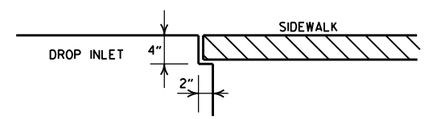

DETAIL OF NOTCH FOR SIDEWALKS

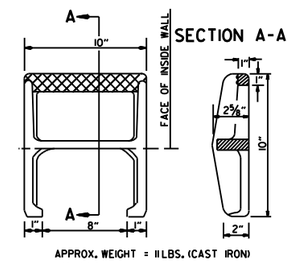

APPROX. WEIGHT = 11 LBS. (CAST IRON)

PLAN

NOTE: THIS DETAIL IS TYPICAL. OTHERS MAY BE USED WITH PRIOR APPROVAL OF THE ENGINEER.

DETAIL OF STEP FOR DROP INLET

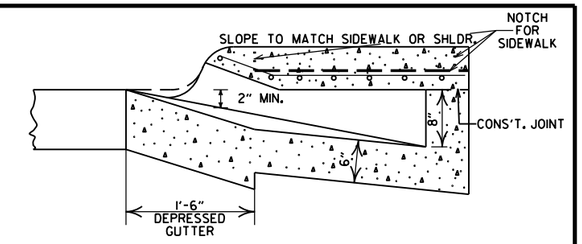

SECTION B-B

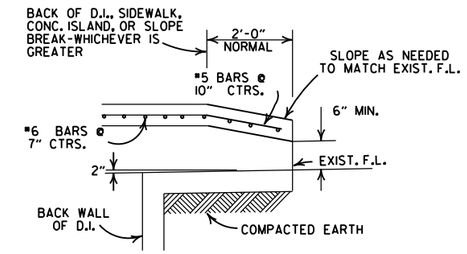

BACK OPENING

WHEN OPENING IN BACK IS CALLED FOR ON PLANS EXTEND OPENING AS SHOWN IN DETAIL. PAYMENT TO BE INCLUDED IN PRICE BID FOR DROP INLET (TYPE MO).

GENERAL NOTES:

1. ALL EXPOSED CORNERS TO HAVE 3/4" CHAMFER.
2. STEPS SHALL BE INSTALLED IN ALL INLETS 4'-0" HIGH AND OVER OR AS DIRECTED BY THE ENGINEER.
3. ALL REINFORCING BARS SHALL BE GRADE 60 AND HAVE MIN. 1 1/2" COVER.
4. DROP INLETS AND EXTENSION ON CURVED SECTIONS SHALL CONFORM TO THE CURVATURE OF THE CURB.
5. 4" DIA. COLUMNS SPACED AT MAX. 4'-0" INTERVALS SHALL BE INSTALLED ALONG INLET AND EXTENSION TO SUPPORT TOP.
6. BASE AND INLET WALLS SHALL BE CAST MONOLITHICALLY.
7. THE THROAT SHALL BE CAST INTEGRALLY WITH THE GUTTER.
8. PAYMENT FOR CURB AND/OR CURB AND GUTTER WITHIN THE LIMITS OF DROP INLETS AND DROP INLET EXTENSIONS SHALL BE CONSIDERED INCLUDED IN PAYMENT MADE FOR DROP INLETS AND/OR DROP INLET EXTENSIONS.
9. PIPES MAY ENTER DROP INLET FROM ANY ANGLE OR ELEVATION AS MAY BE APPROVED BY THE ENGINEER.
10. APPROPRIATE SIZE TYPE C DROP INLETS MAY BE SUBSTITUTED FOR TYPE MO DROP INLETS AS APPROVED BY THE ENGINEER. PAYMENT TO BE AS DROP INLET (TYPE MO).
11. DURING CONSTRUCTION OF THE ROADWAY THE CONTRACTOR SHALL MAINTAIN DRAINAGE INTO OR AROUND THE DROP INLET AS APPROVED BY THE ENGINEER.
12. 4"x2" NOTCH SHALL BE FORMED IN ALL DROP INLETS TO SUPPORT SIDEWALK CONSTRUCTION. REFER TO DETAIL OF NOTCH FOR SIDEWALKS.
13. DIMENSIONS SHOWN FOR RING AND COVER ARE TYPICAL. THE CONTRACTOR MAY SUBSTITUTE SIMILAR CASTINGS WITH THE APPROVAL OF THE ENGINEER. REQUESTING APPROVAL FOR CASTING DESIGNS MAY BE MADE BY REFERRING TO PREVIOUSLY APPROVED DRAWINGS.

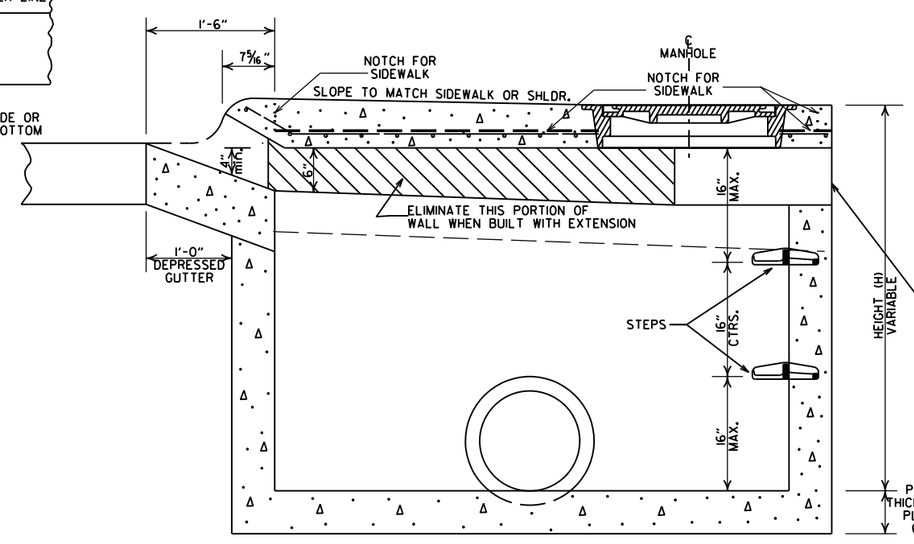

SECTION A-A

DIA. OF D.I.	DIA. OF OUTLET PIPE	MINIMUM WALL THICKNESS CAST IN PLACE	MINIMUM WALL THICKNESS PRECAST
4' I.D.	12" THRU 27"	6"	5"
5' I.D.	30" THRU 42"	8"	6"
6' I.D.	48" THRU 54"	8"	7"

DATE	REVISIONS	DATE FILMED
8-22-02	ADDED PAY LIMIT CURB NOTES TO SECTIONS A-A & B-B	
11-16-01	ADDED NOTE 13	
1-12-00	REVISED HEAVY DUTY RING & COVER	
5-13-99	ADDED NOTCH DETAIL FOR SIDEWALKS	
7-02-98	REP. NOTE 8, REM. PLAN DET., REV. PICTURE FOR NEW RING & COVER, ADDED HEAVY DUTY RING & COVER AND DETAIL OF STEP FOR DROP INLET	
4-26-96	ADDED NOTE 11, ADJ. OPENING DIMENSION	
10-12-95	CORRECTED #6 BAR SPACING	
7-20-95	CORRECTED DIAMETER OF D.I. IN BOX	
2-2-95	TYPE C TO MO (OPEN. BACK DETAIL)	
11-3-94	REVISED GENERAL NOTES	11-3-94
4-1-93	REV. BACK OPEN. DETAIL & NOTE	4-1-93
8-16-91	REVISED NOTES 1,12 & ADDED BK.OPEN DETAIL	8-15-91
11-30-89	ADDED NOTE NO. 12	11-30-89
3-23-89	ADDED NOTE & MINIMUM WALL THICKNESS	513-3-23-89
7-15-88	ADDED EXTEND NOTE TO SECTION A-A	629-7-15-88
1-14-87	MODIFIED WALL THICKNESS	783-1-14-87
6-12-87	ISSUED	4-6-12-87

ARKANSAS STATE HIGHWAY COMMISSION

DETAILS OF DROP INLET (TYPE MO)

STANDARD DRAWING FPC-9M

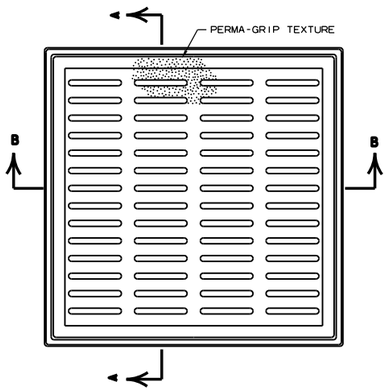

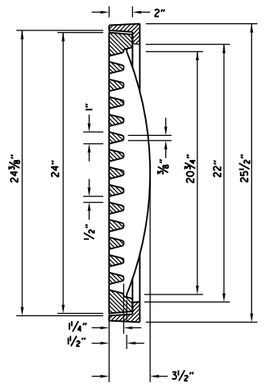

SECTION A-A

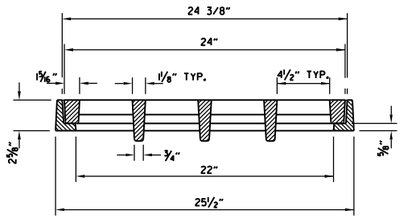

SECTION B-B

GENERAL NOTES (PEDESTRIAN GRATE & FRAME)

1. THE PEDESTRIAN GRATE SHALL BE ORIENTED IN THE TOP OF THE DROP INLET SO THAT THE ½" OPENINGS ARE PERPENDICULAR TO THE PATH OF PEDESTRIAN TRAVEL.
2. THE PEDESTRIAN GRATE AND FRAME SHALL BE CONSTRUCTED OF CAST IRON AND SHALL CONFORM TO THE REQUIREMENTS OF THE STANDARD SPECIFICATIONS FOR GRAY IRON CASTINGS AASHTO M 105, CLASS 35B, & AASHTO M 306.
3. THE GRATE AND FRAME SHALL NOT BE PAINTED.
4. THE GRATE AND FRAME SHALL BE INSTALLED IN THE DROP INLET IN THE ASSEMBLED POSITION.
5. THE APPROXIMATE WEIGHT OF THE GRATE AND FRAME SHALL BE 218 LBS.
6. THE MINIMUM WATERWAY OPENING SHALL BE 122 SQ. IN.

DETAILS OF PEDESTRIAN GRATE AND FRAME

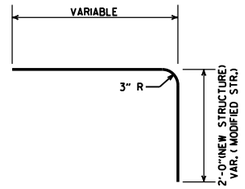

DETAIL OF BENT "b" BAR

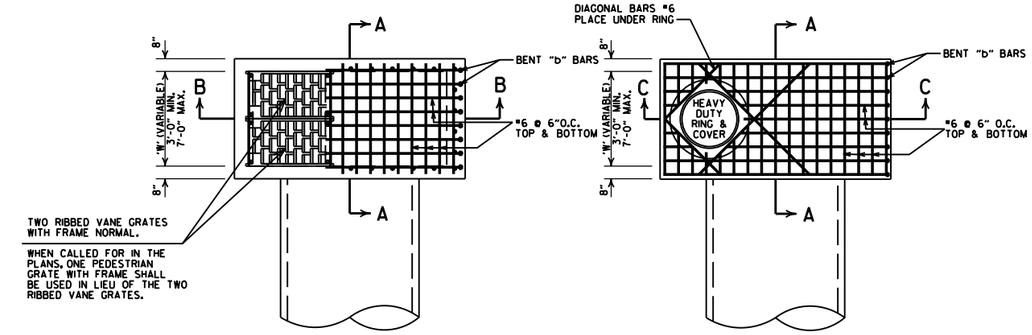

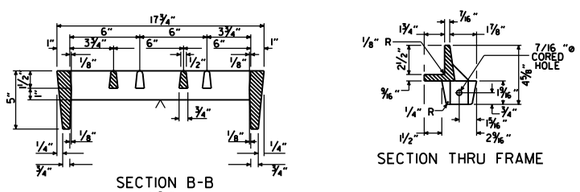

SECTION B-B

SECTION THRU FRAME

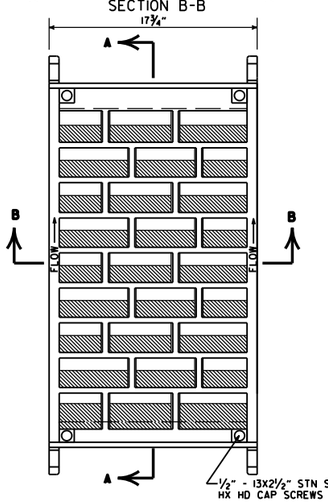

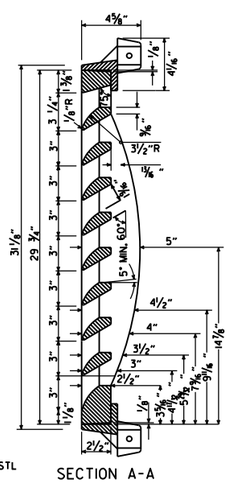

SECTION A-A

DETAILS OF RIBBED VANE GRATE AND FRAME

GENERAL NOTES (RIBBED VANE GRATE & FRAME)

1. RIBBED VANE GRATE AND FRAME SHALL BE CONSTRUCTED OF CAST IRON AND SHALL CONFORM TO THE REQUIREMENTS OF THE STANDARD SPECIFICATIONS FOR GRAY IRON CASTINGS AASHTO M 105, CLASS 35B, & AASHTO M 306.
2. GRATE AND FRAME SHALL NOT BE PAINTED.
3. GRATE AND FRAME SHALL BE INSTALLED IN DROP INLET IN ASSEMBLED POSITION.
4. APPROXIMATE WEIGHT OF GRATE SHALL BE 170 LBS.

SECTION 'A'
'V' = 8"

SECTION 'B' (W≤4'-0")
'V' = 8"

SECTION 'B' (W>4'-0")
'V' = 10"

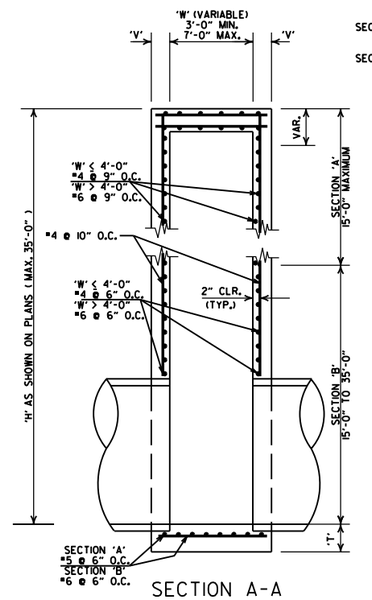

SECTION A-A

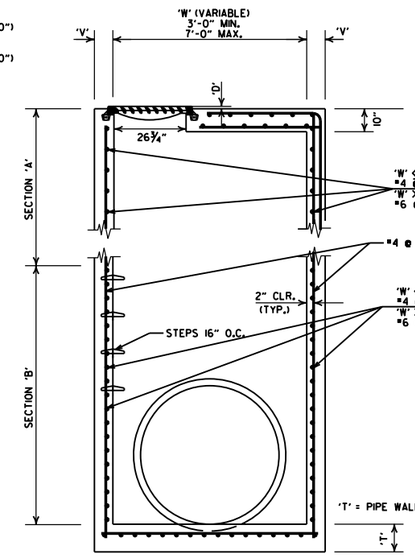

SECTION B-B

SECTION C-C

DETAILS OF JUNCTION BOX (TYPE ST)

GENERAL NOTES (TYPE ST DROP INLET & JUNCTION BOX)

1. THE 'D' DIMENSION SHALL MATCH THE FINAL LIFT OF ACHM SURFACE COURSE SHOWN IN THE PLANS WHEN ASPHALT PAVING SURROUNDS THE GRATE OR RING COVER, AND SHALL BE 0" AT OTHER INSTALLATIONS.
2. THE STEPS SHALL BE OMITTED WHERE 'H' IS LESS THAN 4'-0".
3. ALL EXPOSED CORNERS ARE TO HAVE A ¾" CHAMFER.

DETAILS OF DROP INLET (TYPE ST)

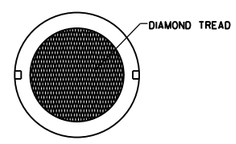

COVER FACE

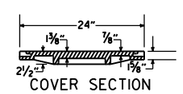

COVER SECTION

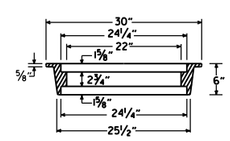

RING SECTION

HEAVY DUTY RING & COVER

APPROXIMATE TOTAL WEIGHT = 333 LBS.

GENERAL NOTES (HEAVY DUTY RING & COVER):

1. HEAVY DUTY RING AND COVER SHALL BE CONSTRUCTED OF CAST IRON AND SHALL CONFORM TO THE REQUIREMENTS OF THE STANDARD SPECIFICATIONS FOR GRAY IRON CASTINGS AASHTO M 105, CLASS 35B, & AASHTO M 306.
2. HEAVY DUTY RING AND COVER SHALL NOT BE PAINTED.
3. HEAVY DUTY RING SHALL ALWAYS BE INSTALLED WITH FLANGE ON TOP.
4. DIMENSIONS SHOWN FOR RING AND COVER ARE TYPICAL. THE CONTRACTOR MAY SUBSTITUTE SIMILAR CASTINGS WITH THE APPROVAL OF THE ENGINEER, REQUESTING APPROVAL FOR CASTING DESIGNS MAY BE MADE BY REFERRING TO PREVIOUSLY APPROVED DRAWINGS.

DATE REVISED	DATE FILMED	DESCRIPTION
7-26-12		REMOVED NOTE 4, REVISED 'T', REVISED BOTTOM SLAB REBAR FOR SECTION 'A', SHOWED REBAR CLEARANCE IN SECTIONS
11-16-01		ADDED NOTE 4
1-12-00		REVISED HEAVY DUTY RING & COVER
5-13-99		ADDED PEDESTRIAN FRAME & GRATE
7-02-98		REMOVED NOTE 5, REV. DIMENSIONS, ADDED HEAVY DUTY RING & COVER ADDED AASHTO REF. REVISED GRATE
10-18-96		REVISED ASTM REF. TO AASHTO
10-1-92		REVISED & REISSUED
8-15-91	8-15-91	REVISED & REISSUED

ARKANSAS STATE HIGHWAY COMMISSION

DETAILS OF DROP INLET & JUNCTION BOX (TYPE ST)

STANDARD DRAWING FPC-9S

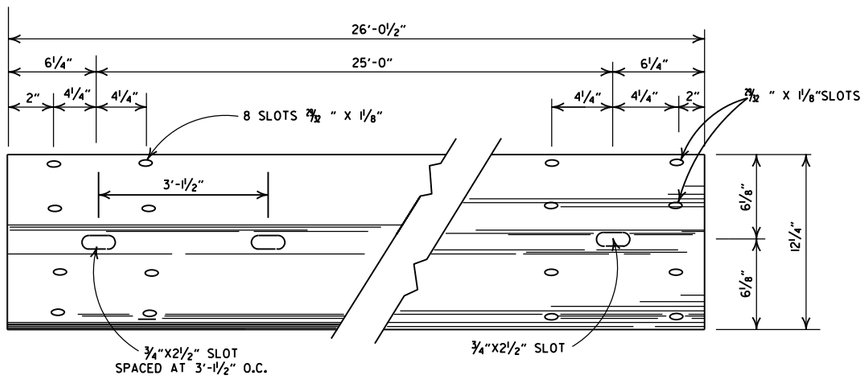

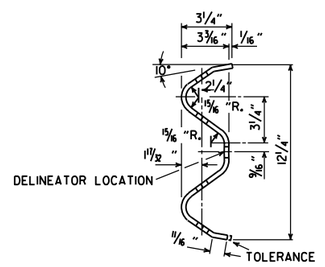

DETAILS OF W-BEAM GUARDRAIL

RAIL SECTION OF CLOSELY SIMILAR DIMENSIONS AND COMPARABLE STRENGTH MAY BE SUBSTITUTED IF APPROVED BY THE ENGINEER.

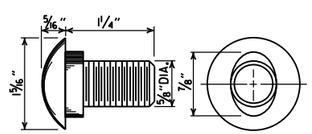

SPLICE BOLT
POST BOLT - SAME EXCEPT LENGTH

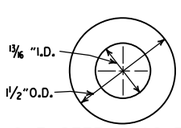

CUT STEEL WASHER

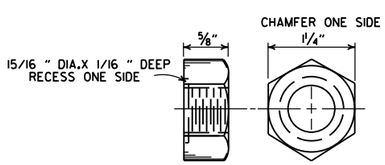

NUT

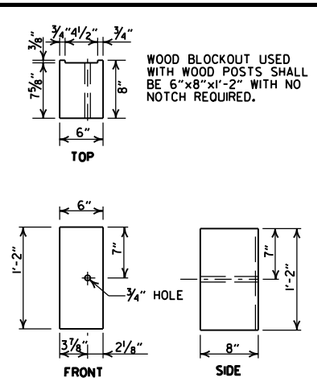

WOOD BLOCKOUT USED WITH WOOD POSTS SHALL BE 6"x8"x1'-2" WITH NO NOTCH REQUIRED.

WOOD BLOCKOUT (W-BEAM)

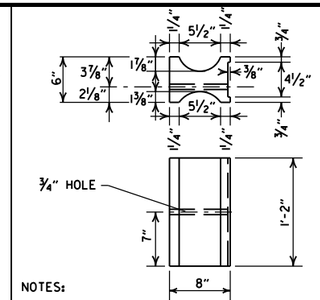

NOTES:

1. SIMILAR SHAPED PLASTIC BLOCKOUTS MAY BE USED AS LONG AS THEY MEET REQUIREMENTS FOR MANUAL FOR ASSESSING SAFETY HARDWARE (MASH).
2. DIMENSIONS ARE SUBJECT TO MANUFACTURERS TOLERANCES.

PLASTIC BLOCKOUT (W-BEAM)

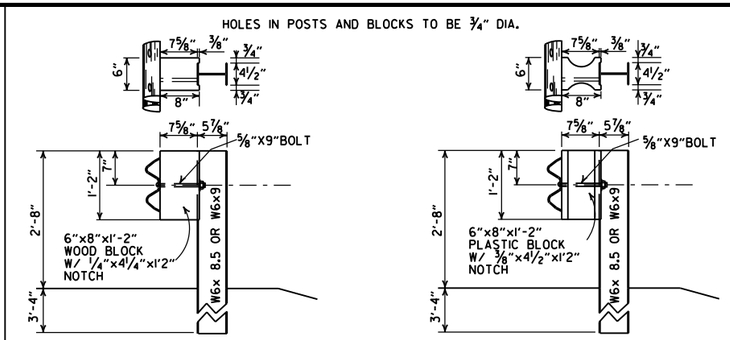

WOOD BLOCKOUT CONNECTIONS

PLASTIC BLOCKOUT CONNECTIONS

DETAILS OF STEEL LINE POST CONNECTIONS (W-BEAM)

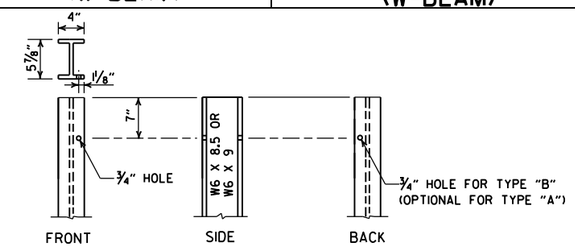

STEEL POST

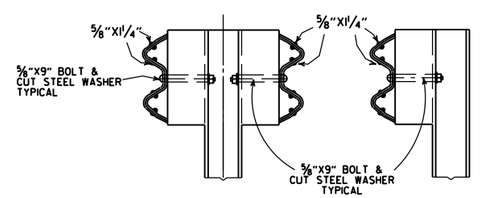

DETAILS OF STEEL LINE POST CONNECTIONS (W-BEAM)

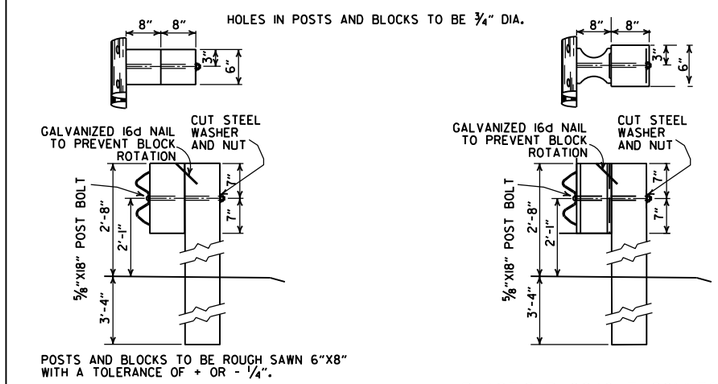

WOOD BLOCKOUT CONNECTIONS

PLASTIC BLOCKOUT CONNECTIONS

DETAILS OF WOOD LINE POST CONNECTIONS (W-BEAM)

-GENERAL NOTES-

ALL BOLTS SHALL BE SUFFICIENT LENGTH TO EXTEND THROUGH THE FULL THICKNESS OF THE NUT AND NO MORE THAN ¾" BEYOND IT.

WHERE W-BEAM GUARDRAIL CONTINUES, THE INTERMEDIATE SECTIONS SHALL HAVE A POST SPACING OF 6'-3" UNLESS OTHERWISE NOTED.

W-BEAM GUARDRAIL REPRESENTING INTERMEDIATE SECTIONS WILL BE MEASURED ALONG THE ROADWAY FACE FROM CENTERLINE OF POST TO CENTERLINE OF POST.

USE W-BEAM GUARDRAIL COMPONENTS OF SAME MATERIAL FOR ENTIRE JOB. FOR EXTENSIONS OR MODIFICATION OF EXISTING GUARDRAIL, W-BEAM GUARDRAIL COMPONENTS OF THE SAME TYPE AS THOSE EXISTING SHALL BE USED.

ANY BACKFILLING UNDER OR AROUND POST SHALL BE DAMP SAND THOROUGHLY TAMPED IN PLACE.

WOOD POSTS & WOOD BLOCKS SHALL BE EITHER DENSE NO. 1 STRUCTURAL OR BETTER 9.7f (1400 f) OR NO. 1 1350 f SOUTHERN PINE.

CONTRACTOR SHALL HAVE THE OPTION OF USING WOOD BLOCKOUTS FOR W-BEAM GUARDRAIL OR PLASTIC BLOCKOUTS, AS LONG AS BLOCKOUT USED MEETS REQUIREMENTS FOR MANUAL FOR ASSESSING SAFETY HARDWARE (MASH) FOR W-BEAM GUARDRAIL.

DELINEATORS SHALL BE MOUNTED AT 37.5' SPACING ON THE FRONT FACE OF THE GUARDRAIL. SPACING MAY BE REDUCED IN CURVES, AS DIRECTED BY THE ENGINEER. COLOR SHALL BE IN ACCORDANCE WITH THE MANUAL ON UNIFORM TRAFFIC CONTROL DEVICES. PAYMENT FOR DELINEATORS SHALL BE CONSIDERED INCLUDED IN THE PRICE BID PER LIN. FT. FOR GUARDRAIL.

DATE	REVISION	FILMED
05-19-22	REVISED GENERAL NOTES. ADDED DELINEATOR LOCATION.	
11-07-19	RENUMBERED AND RENAMED	
11-16-17	REVISED GENERAL NOTES AND RAISED GUARDRAIL HEIGHT 3"	
07-14-10	RAISED HEIGHT OF GUARDRAIL 1"	
10-15-09	ADDED REFERENCE TO MASH	
04-10-03	REVISED GENERAL NOTES	
08-22-02	REVISED DIMENSION ON WOOD & PLASTIC BLOCKOUT CONNECTIONS & STEEL POST	
11-16-01	REVISED WOOD BLOCKOUT & DETAILS OF WOOD LINE POST CONNECTIONS	
03-30-00	REMOVED GUARDRAIL AT BRIDGE ENDS	
01-12-00	ADDED PLASTIC BLOCKOUT	
08-12-98	REV. BLOCKOUTS TO WOOD. DELETED CONC. POST & REV. GENERAL NOTE. DELETED DET. OF GUARDRAIL REPLACE. BEHIND CURB & DET. OF POST PLACE. IN SOLID ROCK. & ADDED DETAILS OF STEEL LINE POST CONN. REMOVED BACK-UP PLATE. REVISED HOLES IN STEEL POLES	
04-03-97	REMOVED "LAP IN DIRECTION OF TRAFFIC" NOTE & PLACED ARROWS ON WASHERS	
10-18-96	REVISED WOOD POST NOTE	
06-02-94	ADDED ALT. STEEL POST SIZE	
08-05-93	REVISED STEEL POST SIZE	8-5-93
10-01-92	REDRAWN & REVISED	10-1-92
08-15-91	REVISED WASHER NOTE	8-15-91
08-02-90	REV. GEN. NOTE & DEPTH OF ANC. POST IN ROCK	8-2-90
07-15-88	REVISED SECTION 3 & GENERAL NOTES	
03-04-88	REV. ANCHOR POST, ELEV. NOTES & POST IN ROCK	780-3-4-88
10-30-87	REVISED WOOD LINE POST DETAIL	546-10-30-87
10-09-87	REDRAWN & REVISED	802-10-9-87

ARKANSAS STATE HIGHWAY COMMISSION

GUARDRAIL DETAILS

STANDARD DRAWING GR-6

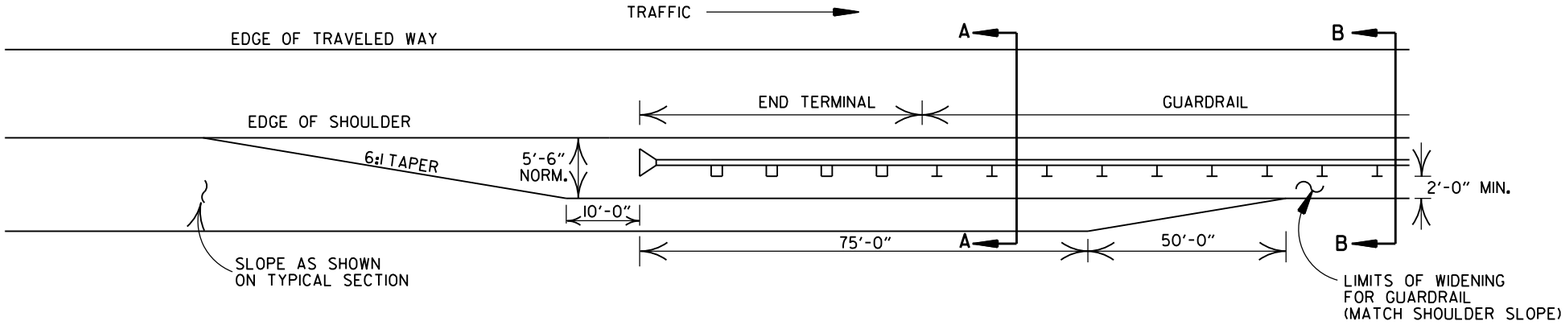

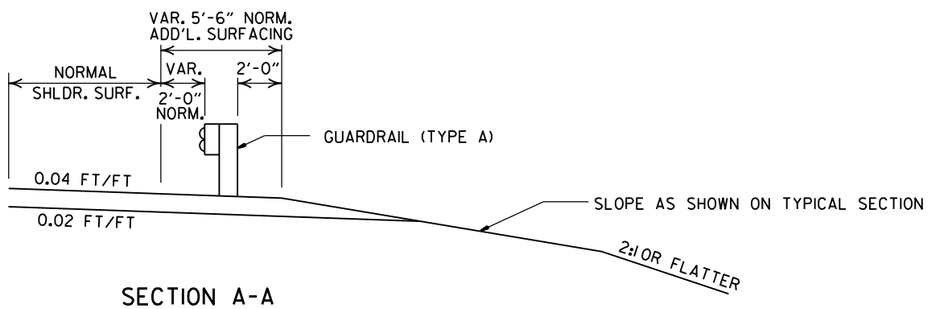

SECTION A-A

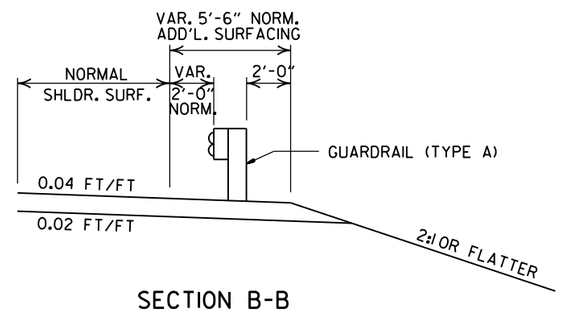

SECTION B-B

DETAILS OF WIDENING FOR GUARDRAIL

NOTE: NORMAL SECTION TO BE WIDENED APPROX. 5'-6" EACH SIDE TO SUPPORT GUARDRAIL.

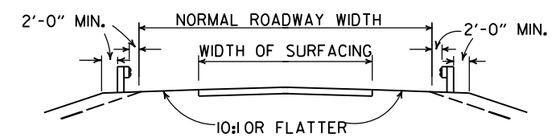

SECTION ON TANGENT

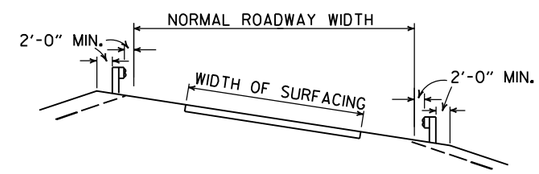

SECTION ON CURVE

DETAILS SHOWING POSITION OF GUARDRAIL ON HIGHWAY

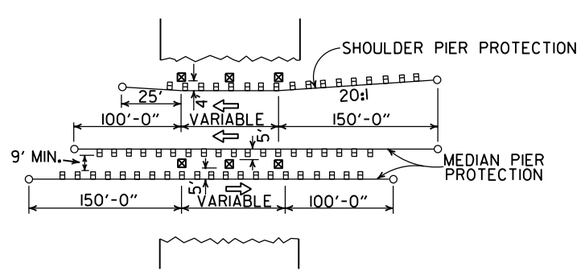

METHOD OF INSTALLATION OF GUARDRAIL AT FIXED OBSTACLE

DATE	REVISION	DATE FILM
11-07-19	RENUMBERED AND RENAMED	
4-17-08	MINOR REVISION	
11-10-05	DRAWN	

ARKANSAS STATE HIGHWAY COMMISSION

GUARDRAIL DETAILS

STANDARD DRAWING GR-9

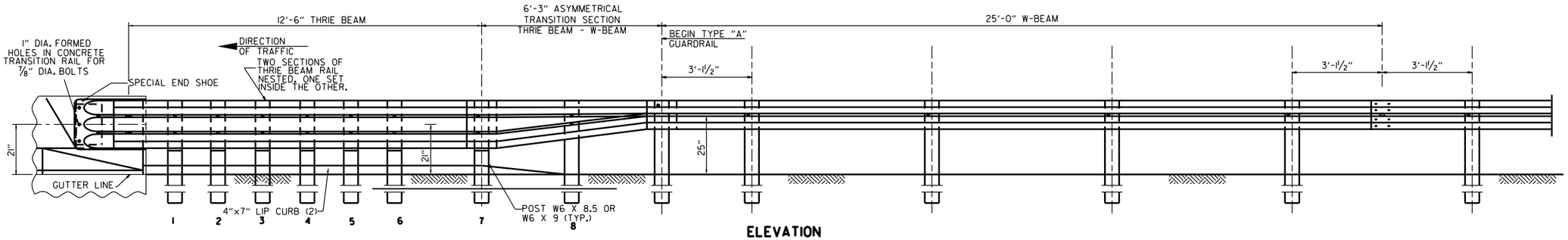

ELEVATION

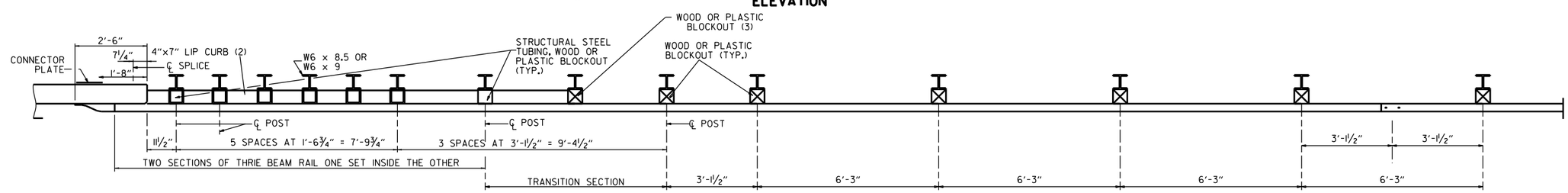

PLAN

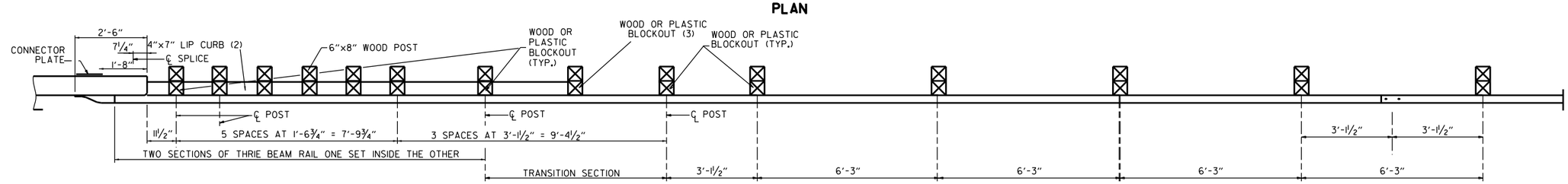

PLAN

(1) VERIFY BOLT SPACING FROM RAIL TRANSITION PRODUCER.
(2) REFER TO APPROACH GUTTER DETAILS.
(3) LENGTH OF BLOCKOUT ON POST 8 TO BE MODIFIED TO FIT RAIL WIDTH.

THRIE BEAM GUARDRAIL CONNECTION AT BRIDGE ENDS

GENERAL NOTES:

THE THRIE BEAM RAIL, SPECIAL END SHOE, AND THE TRANSITION SECTION SHALL BE MADE OF STEEL AND SHALL BE 12 GAGE. ZINC COATING SHALL BE TYPE I.

RAIL POSTS SHALL BE SET PERPENDICULAR TO THE ROADWAY PROFILE GRADE AND VERTICALLY IN CROSS SECTION.

ALL BOLTS SHALL BE SUFFICIENT LENGTH TO EXTEND THROUGH THE FULL THICKNESS OF THE NUT AND NO MORE THAN 3/4" BEYOND IT.

ALL LAP SPLICES, INCLUDING SPECIAL END SHOES, SHALL BE MADE IN THE DIRECTION SHOWN ON STANDARD DRAWINGS GR-8 & GR-13.

REFER TO STD. DRWG. GR-11 FOR POST DETAILS.

USE THRIE BEAM GUARDRAIL COMPONENTS OF SAME MATERIAL FOR ENTIRE JOB.

THRIE BEAM POSTS SHALL BE SAME MATERIAL AS W-BEAM POSTS FOR ENTIRE JOB.

POSTS SHALL NOT BE PLACED AT SPLICE LOCATIONS ALONG W-BEAM RAILS.

WOOD POSTS & WOOD BLOCKS SHALL BE EITHER DENSE NO. 1 STRUCTURAL OR BETTER 9.7f (1400 f) OR NO. 1 1350 f SOUTHERN PINE.

DATE	REVISION	FILMED
05-14-20	REVISED NOTES	
11-07-19	RENAMED & REVISED REFERENCES	
11-16-17	RE-DRAWN FROM STD. DWG. GR-10 & ISSUED	

ARKANSAS STATE HIGHWAY COMMISSION

GUARDRAIL DETAILS

STANDARD DRAWING GR-12

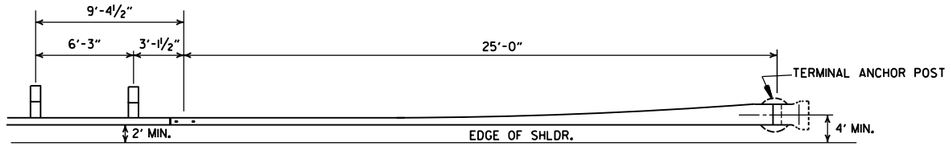

PLAN - GUARDRAIL TERMINAL (TYPE I)

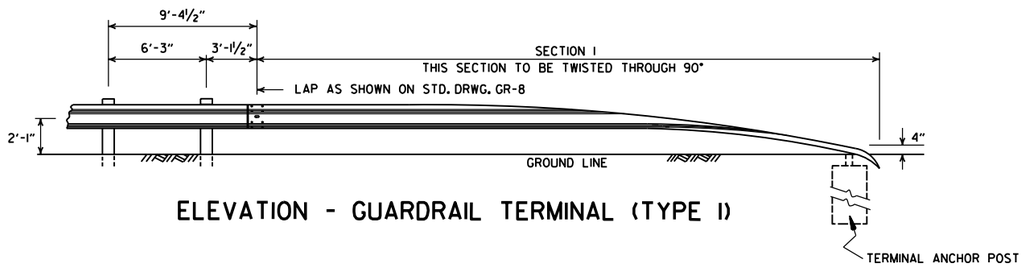

ELEVATION - GUARDRAIL TERMINAL (TYPE I)

NOTE:
SECTIONS 1 AND 2 OF GUARDRAIL TERMINAL
SHALL BE PAID FOR AT THE PRICE BID PER
LINEAR FOOT OF THE TYPE OF GUARDRAIL SPECIFIED.

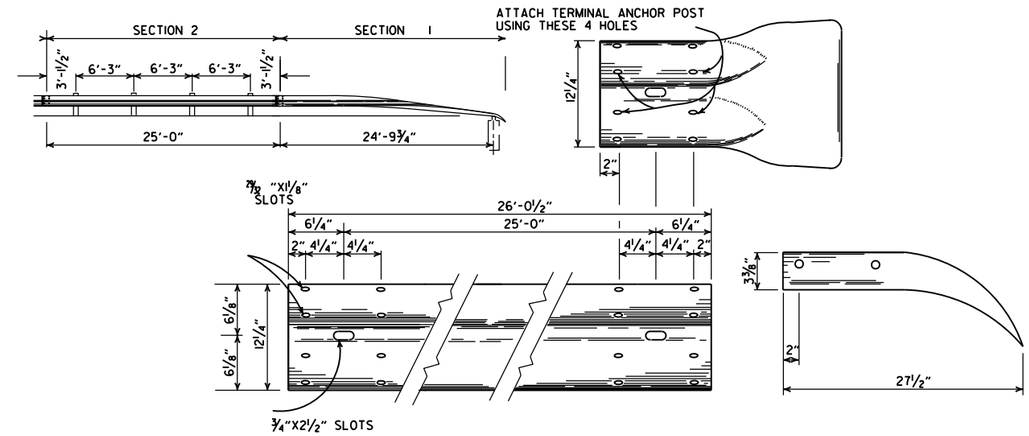

SECTION 1

TERMINAL SECTION

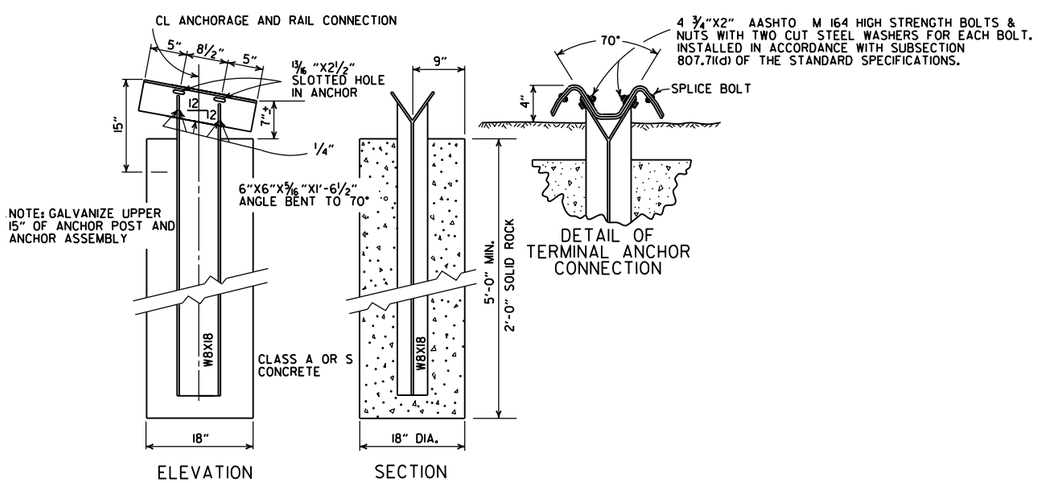

NOTE: RAIL MEMBERS MAY BE BOLTED TO ANGLE AT TERMINAL ANCHOR AND THE TWO ASSEMBLIES POSITIONED TO PROPER ALIGNMENT PRIOR TO PLACING CONCRETE AROUND 8 WF 17 POST IF CONTRACTOR SO DESIRES.

DETAIL OF TERMINAL ANCHOR POST (TYPE I)

DATE	REVISION	FILMED
11-07-19	RENAMED & REVISED REFERENCE.	
11-16-17	REVISED GUARDRAIL HEIGHT AND LOCATION OF POSTS	
07-14-10	RAISED HEIGHT OF GUARDRAIL 1"	
06-26-97	REVISED LAP NOTE	
10-18-96	REVISED ASTM REF. TO AASHTO	
11-03-94	DIMENSION TERMINAL DETAIL	
11-11-92	ADDED NOTE FOR PAYMENT	11-11-92
10-01-92	DRAWN & ISSUED	10-1-92

ARKANSAS STATE HIGHWAY COMMISSION

GUARDRAIL DETAILS

STANDARD DRAWING GRT-1

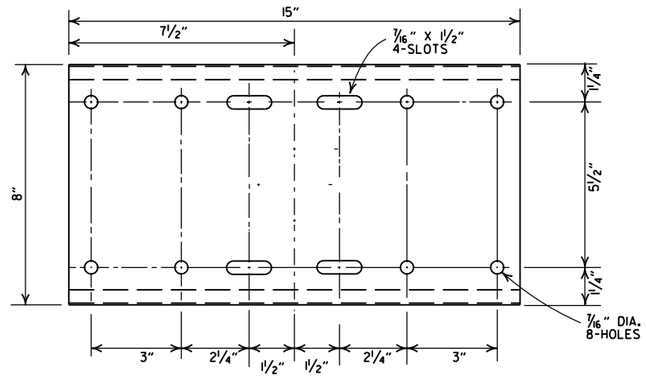

SHELF

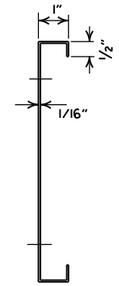

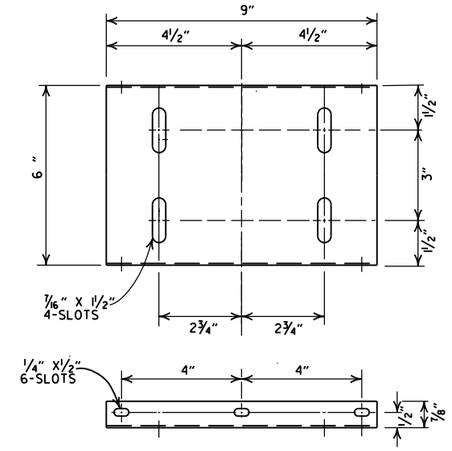

PLATFORM

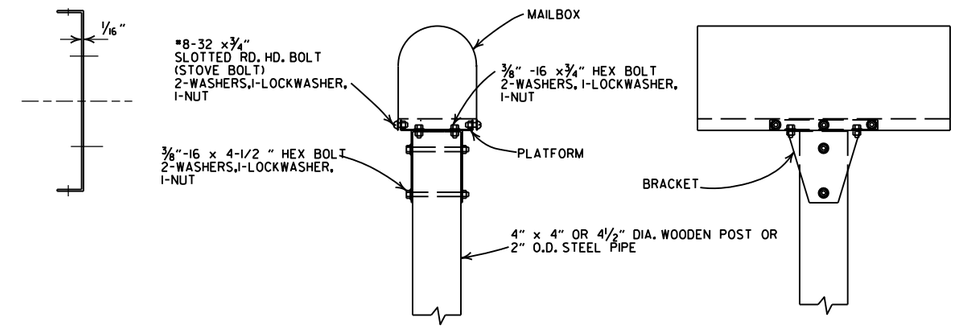

SINGLE INSTALLATION

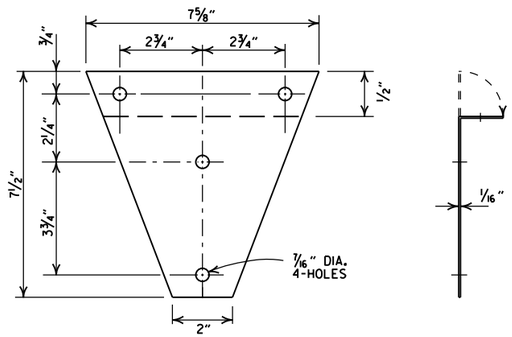

BRACKET

GENERAL NOTES

1. MAILBOX POSTS MAY BE WOOD OR METAL. WOOD POSTS SHALL BE PRESSURE TREATED FOR GROUND CONTACT IN ACCORDANCE WITH SECTION 637.02 OF THE STANDARD SPECIFICATIONS.
2. ANTI-TWIST PLATES SHALL BE USED ONLY ON METAL POSTS.
3. MAILBOX SHELF, BRACKET & PLATFORM SHALL BE GALVANIZED OR PAINTED STEEL, HOWEVER TREATED WOOD MAY BE USED WITH WOODEN POSTS. THE WOODEN SHELF, BRACKET & PLATFORM SHALL BE A MINIMUM OF ¾" THICK AND SHALL BE ASSEMBLED WITH BOLTS OF THE APPROPRIATE LENGTH WITH SIX 8 X ¾" FLATHEAD WOOD SCREWS USED TO ATTACH THE MAILBOX TO THE PLATFORM.
4. THE MAILBOX SHELF AND PLATFORM THAT IS SHOWN IS FOR STANDARD SIZE MAILBOXES. THE SHELF AND PLATFORM SIZE SHALL BE MODIFIED TO FIT MAILBOXES OF A DIFFERENT SIZE.
5. METAL PIPE FOR MAILBOX SUPPORT SHALL BE 2" OUTSIDE DIAMETER STEEL WITH A WALL THICKNESS OF 0.145" AND A WEIGHT OF 2.72 LBS PER FT. OUTSIDE DIAMETER AND WEIGHT SHALL HAVE A TOLERANCE OF +/- 5% ACCORDING TO AASHTO M 181.
6. MAILBOX SUPPORT SYSTEM DIFFERING FROM THOSE SHOWN MAY BE USED, PROVIDED THEY ARE ON THE ARDOT QUALIFIED PRODUCTS LIST FOR MAILBOX SUPPORTS.

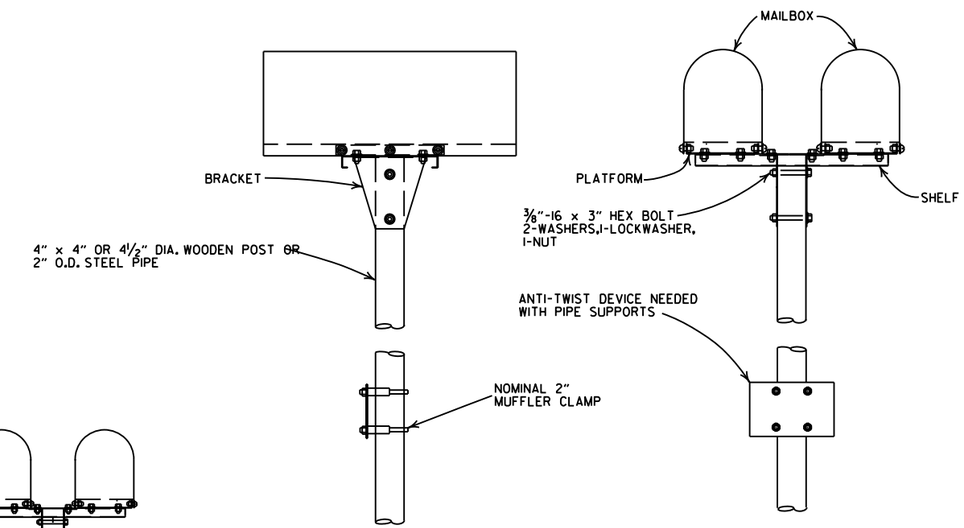

DOUBLE INSTALLATION

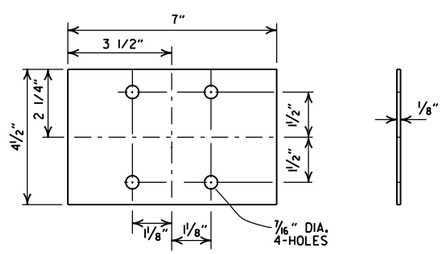

ANTI-TWIST PLATE

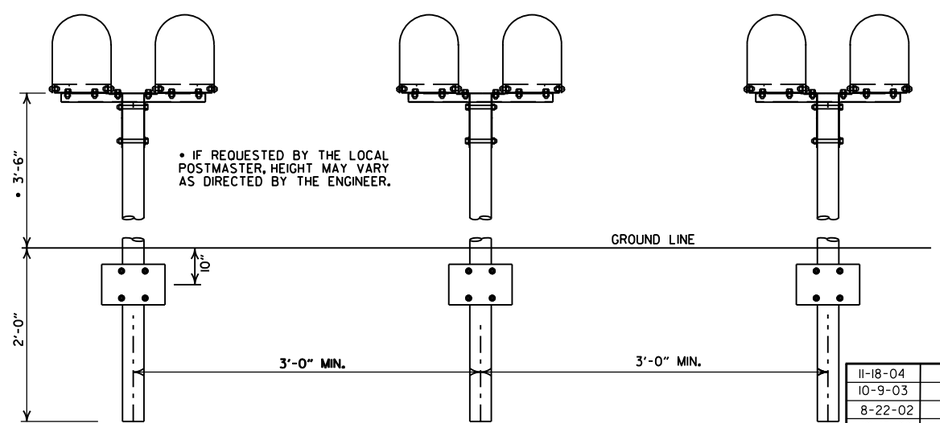

SPACING FOR MULTIPLE POST INSTALLATION

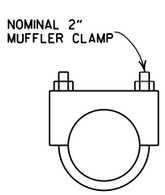

CLAMP

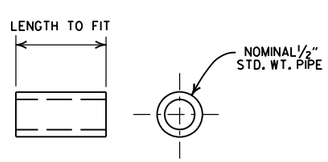

SPACER

DATE	FILMED	REVISION
11-18-04		REVISED NOTES
10-9-03		REVISED NOTE 6
8-22-02		REVISED NOTE 6
10-18-96		CORRECTED AASHTO
10-1-92		CORRECTED SPELLING
9-26-91		NEW PHONE NUMBER
8-15-91		ADDED NOTE
11-30-89		ADJUSTED HEIGHT & ADDED NOTE
2-16-89		DELETED SLOTS FROM SHELF & PLTF
11-17-88	10-1-92	ADJUSTED DIMENSIONS OF STEEL POSTS
7-15-88	20-7-15-88	ISSUED

ARKANSAS STATE HIGHWAY COMMISSION

MAILBOX DETAILS

STANDARD DRAWING MB-1

REINFORCED CONCRETE ARCH PIPE DIMENSIONS

EQUIV. DIA.	SPAN		RISE	
	AASHTO M 206	ARDOT NOMINAL	AASHTO M 206	ARDOT NOMINAL
INCHES	INCHES			
15	18	18	11	11
18	22	22	13½	14
21	26	26	15½	16
24	28½	29	18	18
30	36¼	36	22½	23
36	43⅜	44	26⅝	27
42	51⅛	51	31⅝	31
48	58½	59	36	36
54	65	65	40	40
60	73	73	45	45
72	88	88	54	54
84	102	102	62	62
90	115	115	72	72
96	122	122	77½	77
108	138	138	87⅛	87
120	154	154	96⅞	97
132	168¾	169	106½	107

THE MEASURED SPAN AND RISE SHALL NOT VARY MORE THAN ± 2 PERCENT FROM THE VALUES SPECIFIED BY AASHTO M206.

REINFORCED CONCRETE HORIZONTAL ELLIPTICAL PIPE DIMENSIONS

EQUIV. DIA.	AASHTO M 207	
	SPAN	RISE
INCHES	INCHES	
18	23	14
24	30	19
27	34	22
30	38	24
33	42	27
36	45	29
39	49	32
42	53	34
48	60	38
54	68	43
60	76	48
66	83	53
72	91	58
78	98	63
84	106	68

THE MEASURED SPAN AND RISE SHALL NOT VARY MORE THAN ± 2 PERCENT FROM THE VALUES SPECIFIED BY AASHTO M207.

CONSTRUCTION SEQUENCE

1. PLACE STRUCTURAL BEDDING MATERIAL TO GRADE. DO NOT COMPACT.
2. INSTALL PIPE TO GRADE.
3. COMPACT STRUCTURAL BEDDING OUTSIDE THE MIDDLE THIRD OF THE PIPE.
4. PLACE AND COMPACT THE HAUNCH AREA UP TO THE MIDDLE OF THE PIPE.
5. COMPLETE BACKFILL ACCORDING TO SUBSECTION 606.03.(f)(1).

NOTE: HAUNCH AND STRUCTURAL BEDDING MATERIAL WILL NOT BE PAID FOR SEPARATELY, BUT COMPENSATION WILL BE CONSIDERED TO BE INCLUDED IN THE PRICE BID PER LINEAR FOOT OF CONCRETE PIPE.

- LEGEND -

D_1 = NORMAL INSIDE DIAMETER OF PIPE
D_O = OUTSIDE DIAMETER OF PIPE
H = FILL COVER HEIGHT OVER PIPE (FEET)
MIN. = MINIMUM
= UNDISTURBED SOIL

INSTALLATION TYPE	MATERIAL REQUIREMENTS FOR HAUNCH AND STRUCTURAL BEDDING
TYPE 1	AGGREGATE BASE COURSE (CLASS 5 OR CLASS 7)
TYPE 2	SELECTED MATERIALS (CLASS SM-1, SM-2, OR SM-4) OR TYPE 1 INSTALLATION MATERIAL*
TYPE 3**	AASHTO CLASSIFICATION A-1 THRU A-6 SOIL OR TYPE 1 OR 2 INSTALLATION MATERIAL

* SM-3 WILL NOT BE ALLOWED.

** MATERIALS SHALL NOT INCLUDE ORGANIC MATERIALS OR STONES LARGER THAN 3 INCHES.

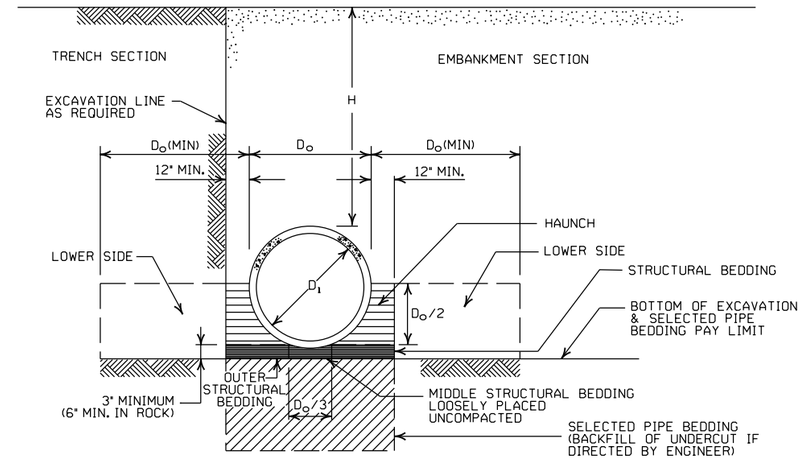

EMBANKMENT AND TRENCH INSTALLATIONS

1. MATERIAL IN THE HAUNCH AND OUTER STRUCTURAL BEDDING SHALL BE COMPACTED TO 95% OF THE MAXIMUM DENSITY ACCORDING TO THE TYPE OR CLASS OF MATERIAL USED.
2. FOR TRENCHES WITH WALLS OF NATURAL SOIL, THE DENSITY OF THE SOIL IN THE LOWER SIDE ZONE SHALL BE AS FIRM AS THE 95% DENSITY REQUIRED FOR THE HAUNCH. IF THE EXISTING SOIL DOES NOT MEET THIS CRITERIA, IT SHALL BE REMOVED AND RECOMPACTED TO 95% OF THE MAXIMUM DENSITY ACCORDING TO THE TYPE OF MATERIAL USED.
3. FOR EMBANKMENTS, THE MATERIAL IN THE LOWER SIDE ZONE SHALL BE COMPACTED TO 95% OF THE MAXIMUM DENSITY ACCORDING TO THE TYPE OR CLASS OF MATERIAL USED.

MINIMUM HEIGHT OF FILL "H" OVER CIRCULAR R.C. PIPE CULVERTS

	CLASS OF PIPE			
	CLASS III		CLASS IV	CLASS V
INSTALLATION TYPE	TYPE 1 OR 2	TYPE 3	ALL	ALL
PIPE ID (IN.)	FEET			
12-15	2	2.5	2	1
18-24	2.5	3	2	1
27-33	3	4	2	1
36-42	3.5	5	2	1
48	4.5	5.5	2	1
54-60	5	7	2	1
66-78	6	8	2	1
84-108	7.5	8	2	1

NOTE: FOR MINIMUM COVER VALUES, "H" SHALL INCLUDE A MINIMUM OF 12" OF PAVEMENT AND/OR BASE.

MAXIMUM HEIGHT OF FILL "H" OVER CIRCULAR R.C. PIPE CULVERTS

INSTALLATION TYPE	CLASS OF PIPE		
	CLASS III	CLASS IV	CLASS V
	FEET		
TYPE 1	21	32	50
TYPE 2	16	25	39
TYPE 3	12	20	30

NOTE: IF FILL HEIGHT EXCEEDS 50 FEET, A SPECIAL DESIGN CONCRETE PIPE WILL BE REQUIRED USING TYPE 1 INSTALLATION.

MINIMUM HEIGHT OF FILL "H" OVER R.C. ARCH & HORIZONTAL ELLIPTICAL PIPE CULVERTS

INSTALLATION TYPE	CLASS OF PIPE	
	CLASS III	CLASS IV
	FEET	
TYPE 2 OR TYPE 3	2.5	1.5

NOTE: TYPE 1 INSTALLATION WILL NOT BE ALLOWED FOR ARCH & HORIZONTAL ELLIPTICAL PIPE CULVERTS.

NOTE: FOR MINIMUM COVER VALUES, "H" SHALL INCLUDE A MINIMUM OF 12" OF PAVEMENT AND/OR BASE.

MAXIMUM HEIGHT OF FILL "H" OVER R.C. ARCH & HORIZONTAL ELLIPTICAL PIPE CULVERTS

INSTALLATION TYPE	CLASS OF PIPE	
	CLASS III	CLASS IV
	FEET	
TYPE 2	13	21
TYPE 3	10	16

NOTE: TYPE 1 INSTALLATION WILL NOT BE ALLOWED FOR ARCH & HORIZONTAL ELLIPTICAL PIPE CULVERTS.

GENERAL NOTES

1. CONCRETE PIPE CULVERT CONSTRUCTION SHALL CONFORM TO ARKANSAS DEPARTMENT OF TRANSPORTATION STANDARD SPECIFICATIONS FOR HIGHWAY CONSTRUCTION (CURRENT EDITION), WITH APPLICABLE SUPPLEMENTAL SPECIFICATIONS AND SPECIAL PROVISIONS. UNLESS OTHERWISE NOTED IN THE PLANS, SECTION AND SUBSECTION REFER TO THE STANDARD CONSTRUCTION SPECIFICATIONS.
2. CONCRETE PIPE CULVERT DESIGN SHALL CONFORM TO AASHTO LRFD BRIDGE DESIGN SPECIFICATIONS, FIFTH EDITION (2010) WITH 2010 INTERIMS.
3. ALL PIPE SHALL CONFORM TO SECTION 606. CIRCULAR R.C. PIPE CULVERTS SHALL CONFORM TO AASHTO M170. R.C. ARCH PIPE CULVERTS SHALL CONFORM TO AASHTO M206 AND HORIZONTAL ELLIPTICAL PIPE CULVERTS SHALL CONFORM TO AASHTO M207.
4. ALL PIPE SHALL BE PROTECTED DURING CONSTRUCTION BY A COVER SUFFICIENT TO PREVENT DAMAGE FROM PASSAGE OF EQUIPMENT.
5. THE MINIMUM TRENCH WIDTH SHALL BE THE OUTSIDE DIAMETER OF THE PIPE PLUS 24 INCHES. THE MAXIMUM ALLOWABLE TRENCH WIDTH SHALL BE THE MINIMUM WIDTH PRACTICABLE FOR WORKING CONDITIONS.
6. MULTIPLE PIPE CULVERTS SHALL BE INSTALLED WITH A MINIMUM CLEARANCE OF 24 INCHES BETWEEN STRINGS OF PIPE. REFER TO STD. DWG. FES-2 FOR MINIMUM CLEARANCE WHERE FLARED END SECTIONS ARE USED.
7. IMPERVIOUS MATERIAL SHOULD BE PLACED AS DIRECTED BY THE ENGINEER AT THE ENDS OF THE CULVERT TO PREVENT LOSS OF STRUCTURAL BEDDING WHEN PERVIOUS MATERIAL IS USED FOR STRUCTURAL BEDDING AND/OR BACKFILL.
8. NOT MORE THAN ONE LIFTING HOLE MAY BE PROVIDED IN CONCRETE PIPE TO FACILITATE HANDLING. HOLE MAY BE CAST IN PLACE, CUT INTO THE FRESH CONCRETE AFTER FORMS ARE REMOVED, OR DRILLED. THE HOLE SHALL NOT BE MORE THAN TWO INCHES IN DIAMETER OR TWO INCHES SQUARE. CUTTING OR DISPLACEMENT OF REINFORCEMENT WILL NOT BE PERMITTED. SPALLED AREAS AROUND THE HOLE SHALL BE REPAIRED IN A WORKMANLIKE MANNER. LIFTING HOLE SHALL BE FILLED WITH MORTAR, CONCRETE, OR OTHER METHOD AS APPROVED BY THE ENGINEER.
9. WHEN DIRECTED BY THE ENGINEER, UNSUITABLE MATERIAL THAT IS ENCOUNTERED AT THE BOTTOM OF THE EXCAVATED TRENCH (BELOW THE AREA IDENTIFIED AS "STRUCTURAL BEDDING" ABOVE) WILL BE EXCAVATED AND REPLACED WITH SELECTED PIPE BEDDING. THE QUANTITY OF MATERIAL REQUIRED TO BACKFILL THE UNDERCUT AREA UP TO THE SELECTED PIPE BEDDING PAY LIMIT DESIGNATED ABOVE WILL BE MEASURED AND PAID FOR AS "SELECTED PIPE BEDDING."
10. WHEN THE EXISTING MATERIAL EXCAVATED FOR THE PIPE TRENCH IS DETERMINED BY THE ENGINEER TO BE UNSUITABLE FOR BACKFILLING THE PIPE (ABOVE THE AREA IDENTIFIED ABOVE AS THE HAUNCH), BORROW MATERIAL OR MATERIAL FROM THE ROADWAY EXCAVATION WILL BE USED TO BACKFILL THE PIPE. IF SUITABLE MATERIAL IS NOT AVAILABLE, THE ENGINEER MAY AUTHORIZE THE USE OF "SELECTED PIPE BACKFILL."

DATE	REVISION	DATE FILMED
2-27-14	REVISED GENERAL NOTE 1.	
12-15-11	REVISED FOR LRFD DESIGN SPECIFICATIONS	
5-18-00	REVISED TYPE 3 BEDDING & ADDED NOTE	
3-30-00	REVISED INSTALLATIONS	
11-06-97	ISSUED	

ARKANSAS STATE HIGHWAY COMMISSION

CONCRETE PIPE CULVERT FILL HEIGHTS & BEDDING

STANDARD DRAWING PCC-1

CORRUGATED STEEL PIPE (ROUND)

PIPE DIAMETER (INCHES)	① MINUMUM COVER TOP OF PIPE TO TOP OF GROUND "H" (FEET)	MAX. FILL HEIGHT "H" ABOVE TOP OF PIPE (FEET)				
		METAL THICKNESS (INCHES)				
		0.064	0.079	0.109	0.138	0.168
2⅔ INCH BY ½ INCH CORRUGATION RIVETED, WELDED, OR HELICAL LOCK-SEAM						
12	1	84	91			
15	1	67	73			
18	1	56	61			
24	1	42	46	59		
30	2	34	36	47		
36	2		30	39	41	
42	2		43	67	70	73
48	2		37	58	61	64
② 3 INCH BY 1 INCH OR 5 INCH BY 1 INCH CORRUGATION RIVETED, WELDED, BOLTED, OR HELICAL LOCK-SEAM						
36	1	48	60	88	111	118
42	1	41	51	72	90	102
48	1	36	45	64	77	85
54	2	32	40	59	71	79
60	2	29	36	53	64	71
66	2	26	33	47	58	64
72	2	24	30	44	53	59
78	2		28	41	49	54
84	2		26	38	45	51
90	2		24	35	43	45
96	2		22	33	40	44
102	2			31	38	42
108	2			30	35	39
114	2			28	34	37
120	2			27	32	35

CORRUGATED ALUMINUM PIPE (ROUND)

PIPE DIAMETER (INCHES)	① MINUMUM COVER TOP OF PIPE TO TOP OF GROUND "H" (FEET)	MAX. FILL HEIGHT "H" ABOVE TOP OF PIPE (FEET)				
		METAL THICKNESS IN INCHES				
		0.060	0.075	0.105	0.135	0.164
		2 ⅔ INCH BY ½ INCH CORRUGATION RIVETED OR HELICAL LOCK-SEAM				
12	1	45	45			
18	2	30	30	52		
24	2	22	22	39	41	
30	2		18	31	32	34
36	2.5		15	26	27	28
42	2			43	43	44
48	2			40	41	43
54	2			35	37	38
60	2				33	34
66	2					31
72	2					29

CORRUGATED METAL PIPE ARCHES

EQUIV. DIA. (INCHES)	PIPE DIMENSION SPAN X RISE (INCHES)	MINUMUM CORNER RADIUS (INCHES)	STEEL				ALUMINUM		
			MIN. THICKNESS REQUIRED INCHES	① MIN. HEIGHT OF FILL, "H" (FT.)		MAX. HEIGHT OF FILL, "H" (FT.)	MIN. THICKNESS REQUIRED INCHES	① MIN. HEIGHT OF FILL, "H" (FT.)	MAX. HEIGHT OF FILL, "H" (FT.)
				INSTALLATION		INSTALLATION		INSTALLATION	INSTALLATION
				TYPE 1		TYPE 1		TYPE 1	TYPE 1
			2 ⅔ INCH BY ½ INCH CORRUGATION RIVETED, WELDED, OR HELICAL LOCK-SEAM				2 ⅔ INCH BY ½ INCH CORRUGATION RIVETED OR HELICAL LOCK-SEAM		
15	17x13	3	0.064	2		15	0.060	2	15
18	21x15	3	0.064	2		15	0.060	2	15
21	24x18	3	0.064	2.25		15	0.060	2.25	15
24	28x20	3	0.064	2.5		15	0.075	2.5	15
30	35x24	3	0.079	3		12	0.075	3	12
36	42x29	3½	0.079	3		12	0.105	3	12
42	49x33	4	0.079	3		12	0.105	3	12
48	57x38	5	0.109	3		13	0.135	3	13
54	64x43	6	0.109	3		14	0.135	3	14
60	71x47	7	0.138	3		15	0.164	3	15
66	77x52	8	0.168	3		15			
72	83x57	9	0.168	3		15			
			② 3 INCH BY 1 INCH OR 5 INCH BY 1 INCH CORRUGATION RIVETED, WELDED, OR HELICAL LOCK-SEAM						
				INSTALLATION		INSTALLATION			
				TYPE 2	TYPE 1	TYPE 2 TYPE 1			
36	40x31	5	0.079	3	2	12 15			
42	46x36	6	0.079	3	2	13 15			
48	53x41	7	0.079	3	2	13 15			
54	60x46	8	0.079	3	2	13 15			
60	66x51	9	0.079	3	2	13 15			
66	73x55	12	0.079	3	2	15 15			
72	81x59	14	0.079	3	2	15 15			
78	87x63	14	0.079	3	2	15 15			
84	95x67	16	0.109	3	2	15 15			
90	103x71	16	0.109	3	2	15 15			
96	112x75	18	0.109	3	2	15 15			
102	117x79	18	0.109	3	2	15 15			
108	128x83	18	0.138	3	2	15 15			

CONSTRUCTION SEQUENCE

1. PLACE STRUCTURAL BEDDING MATERIAL TO GRADE. DO NOT COMPACT.
2. INSTALL PIPE TO GRADE.
3. COMPACT STRUCTURAL BEDDING OUTSIDE THE MIDDLE THIRD OF THE PIPE.
4. COMPLETE STRUCTURAL BACKFILL OPERATION BY WORKING FROM SIDE TO SIDE OF THE PIPE. THE SIDE TO SIDE STRUCTURAL BACKFILL DIFFERENTIAL SHALL NOT EXCEED 24 INCHES OR 1/3 THE SIZE OF THE PIPE, WHICHEVER IS LESS.

NOTE: STRUCTURAL BACKFILL AND STRUCTURAL BEDDING MATERIAL WILL NOT BE PAID FOR SEPARATELY, BUT COMPENSATION WILL BE CONSIDERED TO BE INCLUDED IN THE PRICE BID PER LINEAR FOOT OF METAL PIPE.

INSTALLATION TYPE	MATERIAL REQUIREMENTS FOR STRUCTURAL BACKFILL AND STRUCTURAL BEDDING
TYPE 1	AGGREGATE BASE COURSE (CLASS 4, 5, 6, OR 7)
TYPE 2	SELECTED MATERIALS (CLASS SM-1, SM-2, OR SM-4) OR TYPE 1 INSTALLATION MATERIAL ③

③ SM-3 WILL NOT BE ALLOWED.

EQUIVALENT METAL THICKNESSES AND GAUGES

METAL THICKNESS IN INCHES			GAUGE NUMBER
STEEL			
ZINC COATED	UNCOATED	ALUMINUM	
0.064	0.0598	0.060	16
0.079	0.0747	0.075	14
0.109	0.1046	0.105	12
0.138	0.1345	0.135	10
0.168	0.1644	0.164	8

- LEGEND -

D_o = OUTSIDE DIAMETER OF PIPE
MAX. = MAXIMUM
MIN. = MINIMUM
= STRUCTURAL BACKFILL MATERIAL
= UNDISTURBED SOIL
EQUIV. DIA. = EQUIVALENT DIAMETER
H = FILL COVER HEIGHT OVER PIPE (FEET)

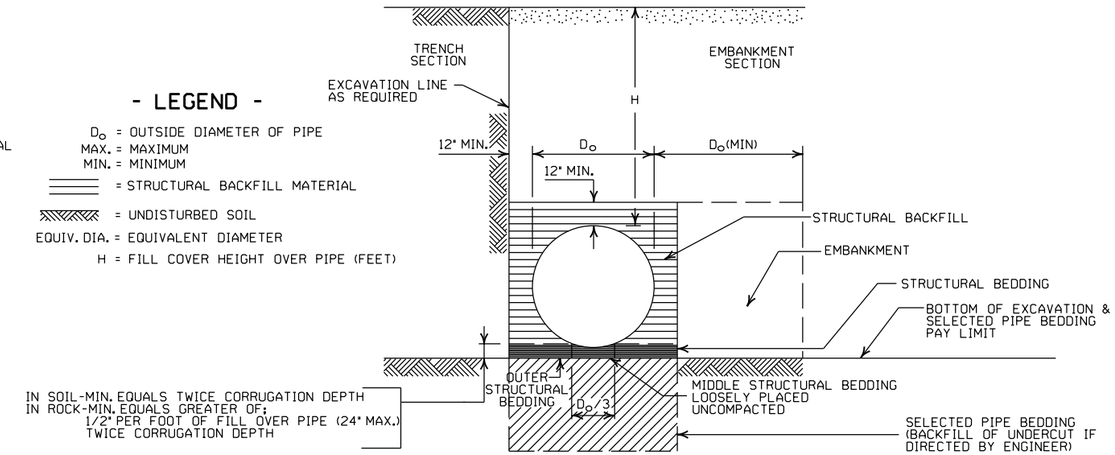

EMBANKMENT AND TRENCH INSTALLATIONS

1. STRUCTURAL BACKFILL, EMBANKMENT, AND OUTER STRUCTURAL BEDDING MATERIAL SHALL BE COMPACTED TO 95% OF THE MAXIMUM DENSITY ACCORDING TO THE TYPE OR CLASS OF MATERIAL USED.
2. INSTALLATION TYPE 1 OR 2 MAY BE USED FOR CORRUGATED STEEL OR ALUMINUM PIPE (ROUND).
3. INSTALALTION TYPE 1 SHALL BE USED FOR CORRUGATED STEEL OR ALUMINUM PIPE ARCHES WITH 2⅔" X ½" CORRUGATION.
4. INSTALLATION TYPE 1 OR 2 MAY BE USED FOR CORRUGATED STEEL OR ALUMINUM PIPE ARCHES WITH 3" X 1" OR 5" X 1" CORRUGATION.

GENERAL NOTES

1. METAL PIPE CULVERT CONSTRUCTION SHALL CONFORM TO ARKANSAS DEPARTMENT OF TRANSPORTATION STANDARD SPECIFICATIONS FOR HIGHWAY CONSTRUCTION (CURRENT EDITION), WITH APPLICABLE SUPPLEMENTAL SPECIFICATIONS AND SPECIAL PROVISIONS. UNLESS OTHERWISE NOTED IN THE PLANS, SECTION AND SUBSECTION REFER TO THE STANDARD CONSTRUCTION SPECIFICATIONS.
2. METAL PIPE CULVERT DESIGN SHALL CONFORM TO AASHTO LRFD BRIDGE DESIGN SPECIFICATIONS, FIFTH EDITION (2010) WITH 2010 INTERIMS.
3. METAL PIPE CULVERT MATERIALS AND INSTALLATIONS SHALL CONFORM TO SECTION 606 AND JOB SPECIAL PROVISION "METAL PIPE".
4. ALL PIPE SHALL BE PROTECTED DURING CONSTRUCTION BY A COVER SUFFICIENT TO PREVENT DAMAGE FROM PASSAGE OF EQUIPMENT.
5. THE MINIMUM TRENCH WIDTH SHALL BE THE OUTSIDE DIAMETER OF THE PIPE PLUS 24 INCHES. THE MAXIMUM ALLOWABLE TRENCH WIDTH SHALL BE THE MINIMUM WIDTH PRACTICABLE FOR WORKING CONDITIONS.
6. MULTIPLE PIPE CULVERTS SHALL BE INSTALLED WITH A MINIMUM CLEARANCE OF 24 INCHES BETWEEN STRINGS OF PIPE. REFER TO STD. DWG. FES-2 FOR MINIMUM CLEARANCE WHERE FLARED END SECTIONS ARE USED.
7. IMPERVIOUS MATERIAL SHOULD BE PLACED AS DIRECTED BY THE ENGINEER AT THE ENDS OF THE CULVERT TO PREVENT LOSS OF STRUCTURAL BEDDING WHEN PERVIOUS MATERIAL IS USED FOR STRUCTURAL BEDDING AND/OR BACKFILL.
8. WHEN DIRECTED BY THE ENGINEER, UNSUITABLE MATERIAL THAT IS ENCOUNTERED AT THE BOTTOM OF THE EXCAVATED TRENCH (BELOW THE AREA IDENTIFIED AS "STRUCTURAL BEDDING" ABOVE) WILL BE EXCAVATED AND REPLACED WITH SELECTED PIPE BEDDING. THE QUANTITY OF MATERIAL REQUIRED TO BACKFILL THE UNDERCUT AREA UP TO THE SELECTED PIPE BEDDING PAY LIMIT DESIGNATED ABOVE WILL BE MEASURED AND PAID FOR AS "SELECTED PIPE BEDDING."
9. WHEN THE EXISTING MATERIAL EXCAVATED FOR THE PIPE TRENCH IS DETERMINED BY THE ENGINEER TO BE UNSUITABLE FOR BACKFILLING THE PIPE (ABOVE THE AREA IDENTIFIED AS STRUCTURAL BACKFILL), BORROW MATERIAL OR MATERIAL FROM THE ROADWAY EXCAVATION WILL BE USED TO BACKFILL THE PIPE. IF SUITABLE MATERIAL IS NOT AVAILABLE, THE ENGINEER MAY AUTHORIZE THE USE OF "SELECTED PIPE BACKFILL."

① FOR MINIMUM COVER VALUES, "H" SHALL INCLUDE A MINIMUM 12" OF PAVEMENT AND/OR BASE.

② WHERE THE STANDARD 2 2/3"× ½" CORRUGATION AND GAUGE IS SPECIFIED FOR A GIVEN DIAMETER, A PIPE OF THE SAME DIAMETER WITH A 3" × 1" OR 5" × 1" CORRUGATION MAY BE SUBSTITUTED, PROVIDING IT IS GAUGED FOR A FILL HEIGHT CONDITION EQUAL TO OR GREATER THAN THE MAXIMUM FILL HEIGHT CONDITION FOR THE SPECIFIED GAUGE AND CORRUGATION.

DATE	REVISION	DATE FILMED
2-27-14	REVISED GENERAL NOTE 1.	
12-15-11	REVISED FOR LRFD DESIGN SPECS	
3-30-00	REVISED INSTALLATIONS	
11-06-97	ISSUED	

ARKANSAS STATE HIGHWAY COMMISSION

METAL PIPE CULVERT FILL HEIGHTS & BEDDING

STANDARD DRAWING PCM-1

INSTALLATION TYPE	•• MATERIAL REQUIREMENTS FOR STRUCTURAL BACKFILL AND STRUCTURAL BEDDING
TYPE 2	•SELECTED MATERIALS (CLASS SM-1, SM-2 OR SM-4)

• AGGREGATE BASE COURSE (CLASS 4, 5, 6, OR 7) MAY BE USED IN LIEU OF SELECTED MATERIAL.

SM3 WILL NOT BE ALLOWED.

•• STRUCTURAL BEDDING MATERIAL SHALL HAVE A MAXIMUM PARTICLE SIZE OF 1 INCH. STRUCTURAL BACKFILL MATERIAL SHALL BE FREE OF ORGANIC MATERIAL, STONES LARGER THAN 1.50 INCH IN GREATEST DIMENSION, OR FROZEN LUMPS.

STRUCTURAL BACKFILL AND STRUCTURAL BEDDING MATERIAL WILL NOT BE PAID FOR SEPARATELY, BUT COMPENSATION WILL BE CONSIDERED TO BE INCLUDED IN THE PRICE BID PER LINEAR FOOT OF HDPE PIPE.

MINIMUM TRENCH WIDTH BASED ON FILL HEIGHT "H"

PIPE DIAMETER	TRENCH WIDTH (FEET) "H" < 10'-0"	TRENCH WIDTH (FEET) "H" >OR= 10'-0"
18"	4'-6"	4'-6"
24"	5'-0"	6'-0"
30"	5'-6"	7'-6"
36"	6'-0"	9'-0"
42"	7'-0"	10'-6"
48"	8'-0"	12'-0"

①NOTE:
18" MIN. (18" - 30" DIAMETERS)
24" MIN. (36" - 48" DIAMETERS)

MINIMUM COVER VALUES, "H" SHALL INCLUDE A MINIMUM 12" OF PAVEMENT AND/OR BASE.

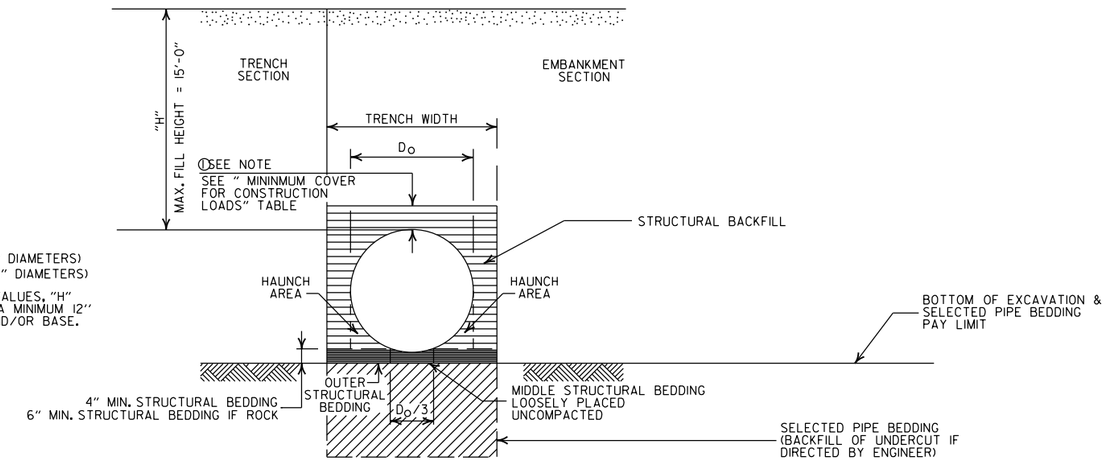

TYPE 2 EMBANKMENT AND TRENCH INSTALLATIONS

1. STRUCTURAL BACKFILL, EMBANKMENT, AND OUTER STRUCTURAL BEDDING MATERIAL SHALL BE COMPACTED TO 95% OF THE MAXIMUM DENSITY ACCORDING TO THE TYPE OR CLASS OF MATERIAL USED.

MULTIPLE INSTALLATION OF HIGH DENSITY POLYETHYLENE PIPES

PIPE DIAMETER	CLEAR DISTANCE BETWEEN PIPES
18"	1'-6"
24"	2'-0"
30"	2'-6"
36"	3'-0"
42"	3'-6"
48"	4'-0"

MINIMUM COVER FOR CONSTRUCTION LOADS

PIPE DIAMETER	② MIN. COVER (FEET) FOR INDICATED CONSTRUCTION LOADS 18.0-50.0 (KIPS)	50.0-75.0 (KIPS)	75.0-110.0 (KIPS)	110.0-175.0 (KIPS)
36" OR LESS	2'-0"	2'-6"	3'-0"	3'-0"
42" OR GREATER	3'-0"	3'-0"	3'-6"	4'-0"

②MINIMUM COVER SHALL BE MEASURED FROM TOP OF PIPE TO TOP OF THE MAINTAINED CONSTRUCTION ROADWAY SURFACE. THE SURFACE SHALL BE MAINTAINED.

CONSTRUCTION SEQUENCE

1. PLACE STRUCTURAL BEDDING MATERIAL TO GRADE. DO NOT COMPACT.
2. INSTALL PIPE TO GRADE.
3. COMPACT STRUCTURAL BEDDING OUTSIDE THE MIDDLE THIRD OF THE PIPE.
4. THE STRUCTURAL BACKFILL SHALL BE PLACED AND COMPACTED IN LAYERS NOT EXCEEDING 8". THE LAYERS SHALL BE BROUGHT UP EVENLY AND SIMULTANEOUSLY TO THE ELEVATION OF THE MINIMUM COVER.
5. PIPE INSTALLATION MAY REQUIRE THE USE OF RESTRAINTS, WEIGHTING OR OTHER APPROVED METHODS IN ORDER TO HELP MAINTAIN GRADE AND ALIGNMENT.

GENERAL NOTES

1. PIPE SHALL CONFORM TO AASHTO M294, TYPE S. INSTALLATION SHALL CONFORM TO JOB SPECIAL PROVISION "PLASTIC PIPE" AND SECTION 606 OF THE STANDARD SPECIFICIATIONS FOR HIGHWAY CONSTRUCTION (CURRENT EDITION).
2. PLASTIC PIPE CULVERT DESIGN SHALL CONFORM TO AASHTO LRFD BRIDGE DESIGN SPECIFICATIONS, FIFTH EDITION (2010) WITH 2010 INTERIMS.
3. THE MAXIMUM ALLOWABLE TRENCH WIDTH SHALL BE THE MINIMUM WIDTH PLUS A SUFFICIENT WIDTH TO ENSURE WORKING ROOM TO PROPERLY AND SAFELY PLACE AND COMPACT HAUNCHING AND OTHER BACKFILL MATERIAL.
4. IMPERVIOUS MATERIAL SHOULD BE PLACED AS DIRECTED BY THE ENGINEER AT THE ENDS OF THE CULVERT TO PREVENT LOSS OF STRUCTURAL BEDDING WHEN PERVIOUS MATERIAL IS USED FOR STRUCTURAL BEDDING AND/OR BACKFILL.
5. WHEN DIRECTED BY THE ENGINEER, UNSUITABLE MATERIAL THAT IS ENCOUNTERED AT THE BOTTOM OF THE EXCAVATED TRENCH (BELOW THE AREA IDENTIFIED AS "STRUCTURAL BEDDING" ABOVE) WILL BE EXCAVATED AND REPLACED WITH SELECTED PIPE BEDDING. THE QUANTITY OF MATERIAL REQUIRED TO BACKFILL THE UNDERCUT AREA UP TO THE SELECTED PIPE BEDDING PAY LIMIT DESIGNATED ABOVE WILL BE MEASURED AND PAID FOR AS "SELECTED PIPE BEDDING."
6. WHEN THE EXISTING MATERIAL EXCAVATED FOR THE PIPE TRENCH IS DETERMINED BY THE ENGINEER TO BE UNSUITABLE FOR BACKFILLING THE PIPE (ABOVE THE AREA IDENTIFIED ABOVE AS STRUCTURAL BACKFILL), BORROW MATERIAL OR MATERIAL FROM THE ROADWAY EXCAVATION WILL BE USED TO BACKFILL THE PIPE. IF SUITABLE MATERIAL IS NOT AVAILABLE, THE ENGINEER MAY AUTHORIZE THE USE OF "SELECTED PIPE BACKFILL."
7. FOR PIPE TYPES THAT ARE NOT SMOOTH ON THE OUTSIDE (CORRUGATED OR PROFILE WALLS), BACKFILL GRADATIONS SHOULD BE SELECTED THAT WILL PERMIT THE FILLING OF THE CORRUGATION OR PROFILE VALLEY.
8. HIGH DENSITY POLYETHYLENE PIPES OF DIAMETERS OTHER THAN SHOWN WILL NOT BE ALLOWED.
9. JOINTS FOR HDPE PIPE SHALL MEET THE REQUIREMENTS FOR SOIL TIGHTNESS AS SPECIFIED IN AASHTO SECTION 26.4.2.4 AND 30.4.2 "AASHTO LRFD BRIDGE CONSTRUCTION SPECIFICATIONS." JOINTS SHALL BE INSTALLED PER MANUFACTURER'S RECOMMENDATIONS.

- LEGEND -

H = FILL HEIGHT (FT.)
Ø = OUTSIDE DIAMETER OF PIPE
MAX. = MAXIMUM
MIN. = MINIMUM

= STRUCTURAL BACKFILL MATERIAL

= UNDISTURBED SOIL

DATE	REVISION	DATE FILMED
2-27-14	REVISED GENERAL NOTE 1.	
12-15-11	REVISED GENERAL NOTES & MINIMUM COVER NOTE	
11-17-10	ISSUED	

ARKANSAS STATE HIGHWAY COMMISSION

PLASTIC PIPE CULVERT (HIGH DENSITY POLYETHYLENE)

STANDARD DRAWING PCP-1

INSTALLATION TYPE	•• MATERIAL REQUIREMENTS FOR STRUCTURAL BACKFILL AND STRUCTURAL BEDDING
TYPE 2	•SELECTED MATERIALS (CLASS SM-1, SM-2, OR SM-4)

• AGGREGATE BASE COURSE (CLASS 4, 5, 6, OR 7) MAY BE USED IN LIEU OF SELECTED MATERIAL.

SM3 WILL NOT BE ALLOWED.

•• STRUCTURAL BEDDING MATERIAL SHALL HAVE A MAXIMUM PARTICLE SIZE OF 1INCH. STRUCTURAL BACKFILL MATERIAL SHALL BE FREE OF ORGANIC MATERIAL, STONES LARGER THAN 1.50 INCH IN GREATEST DIMENSION, OR FROZEN LUMPS.

STRUCTURAL BACKFILL AND STRUCTURAL BEDDING MATERIAL WILL NOT BE PAID FOR SEPARATELY, BUT COMPENSATION WILL BE CONSIDERED TO BE INCLUDED IN THE PRICE BID PER LINEAR FOOT OF PVC PIPE.

MINIMUM TRENCH WIDTH BASED ON FILL HEIGHT "H"

PIPE DIAMETER	TRENCH WIDTH (FEET) "H" < 10'-0"	TRENCH WIDTH (FEET) "H" >OR= 10'-0"
18"	4'-6"	4'-6"
24"	5'-0"	6'-0"
30"	5'-6"	7'-6"
36"	6'-0"	9'-0"

MULTIPLE INSTALLATION OF PVC PIPES

PIPE DIAMETER	CLEAR DISTANCE BETWEEN PIPES
18"	1'-6"
24"	2'-0"
30"	2'-6"
36"	3'-0"

MAXIMUM FILL HEIGHT BASED ON STRUCTURAL BACKFILL

PIPE DIAMETER	"H"
18"	45'-0"
24"	45'-0"
30"	40'-0"
36"	40'-0"

① NOTE:
12" MIN. (18" - 36" DIAMETERS)
MINIMUM COVER VALUE, "H" SHALL INCLUDE A MINIMUM 12" OF PAVEMENT AND/OR BASE.

MINIMUM COVER FOR CONSTRUCTION LOADS

PIPE DIAMETER	② MIN. COVER (FEET) FOR INDICATED CONSTRUCTION LOADS 18.0-50.0 (KIPS)	50.0-75.0 (KIPS)	75.0-110.0 (KIPS)	110.0-175.0 (KIPS)
18" THRU 36"	2'-0"	2'-6"	3'-0"	3'-0"

②MINIMUM COVER SHALL BE MEASURED FROM TOP OF PIPE TO TOP OF THE MAINTAINED CONSTRUCTION ROADWAY SURFACE. THE SURFACE SHALL BE MAINTAINED.

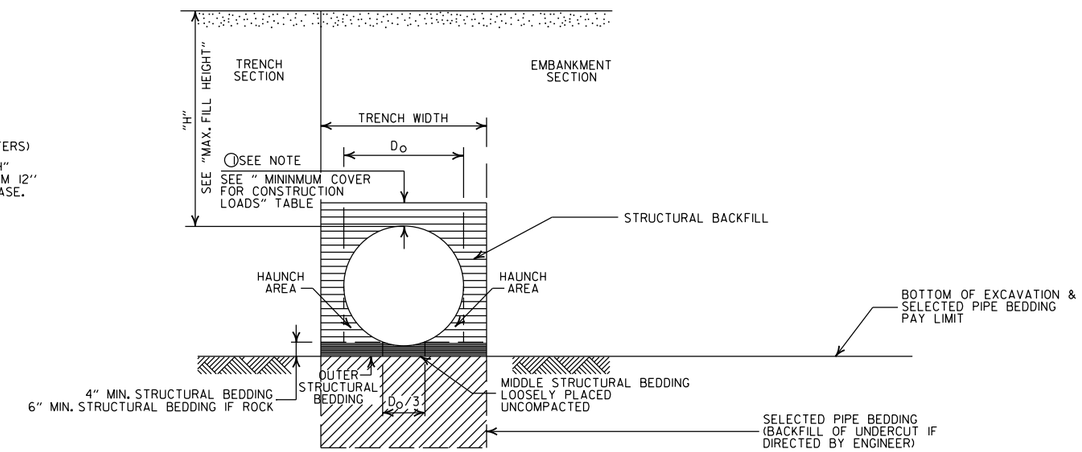

TYPE 2 EMBANKMENT AND TRENCH INSTALLATIONS

1. STRUCTURAL BACKFILL, EMBANKMENT, AND OUTER STRUCTURAL BEDDING MATERIAL SHALL BE COMPACTED TO 95% OF THE MAXIMUM DENSITY ACCORDING TO THE TYPE OR CLASS OF MATERIAL USED.

CONSTRUCTION SEQUENCE

1. PLACE STRUCTURAL BEDDING MATERIAL TO GRADE. DO NOT COMPACT.
2. INSTALL PIPE TO GRADE.
3. COMPACT STRUCTURAL BEDDING OUTSIDE THE MIDDLE THIRD OF THE PIPE.
4. THE STRUCTURAL BACKFILL SHALL BE PLACED AND COMPACTED IN LAYERS NOT EXCEEDING 8". THE LAYERS SHALL BE BROUGHT UP EVENLY AND SIMULTANEOUSLY TO THE ELEVATION OF THE MINIMUM COVER.
5. PIPE INSTALLATION MAY REQUIRE THE USE OF RESTRAINTS, WEIGHTING OR OTHER APPROVED METHODS IN ORDER TO HELP MAINTAIN GRADE AND ALIGNMENT.

GENERAL NOTES

1. PIPE SHALL CONFORM TO ASTM F949, CELL CLASS 12454. INSTALLATION SHALL CONFORM TO JOB SPECIAL PROVISION "PLASTIC PIPE" AND SECTION 606 OF THE STANDARD SPECIFICATIONS FOR HIGHWAY CONSTRUCTION (CURRENT EDITION).
2. PLASTIC PIPE CULVERT DESIGN SHALL CONFORM TO AASHTO LRFD BRIDGE DESIGN SPECIFICATIONS, FIFTH EDITION (2010) WITH 2010 INTERIMS.
3. THE MAXIMUM ALLOWABLE TRENCH WIDTH SHALL BE THE MINIMUM WIDTH PLUS A SUFFICIENT WIDTH TO ENSURE WORKING ROOM TO PROPERLY AND SAFELY PLACE AND COMPACT HAUNCHING AND OTHER BACKFILL MATERIAL.
4. IMPERVIOUS MATERIAL SHOULD BE PLACED AS DIRECTED BY THE ENGINEER AT THE ENDS OF THE CULVERT TO PREVENT LOSS OF STRUCTURAL BEDDING WHEN PERVIOUS MATERIAL IS USED FOR STRUCTURAL BEDDING AND/OR BACKFILL.
5. WHEN DIRECTED BY THE ENGINEER, UNSUITABLE MATERIAL THAT IS ENCOUNTERED AT THE BOTTOM OF THE EXCAVATED TRENCH (BELOW THE AREA IDENTIFIED AS "STRUCTURAL BEDDING" ABOVE) WILL BE EXCAVATED AND REPLACED WITH SELECTED PIPE BEDDING. THE QUANTITY OF MATERIAL REQUIRED TO BACKFILL THE UNDERCUT AREA UP TO THE SELECTED PIPE BEDDING PAY LIMIT DESIGNATED ABOVE WILL BE MEASURED AND PAID FOR AS "SELECTED PIPE BEDDING."
6. WHEN THE EXISTING MATERIAL EXCAVATED FOR THE PIPE TRENCH IS DETERMINED BY THE ENGINEER TO BE UNSUITABLE FOR BACKFILLING THE PIPE (ABOVE THE AREA IDENTIFIED ABOVE AS STRUCTURAL BACKFILL), BORROW MATERIAL OR MATERIAL FROM THE ROADWAY EXCAVATION WILL BE USED TO BACKFILL THE PIPE. IF SUITABLE MATERIAL IS NOT AVAILABLE, THE ENGINEER MAY AUTHORIZE THE USE OF "SELECTED PIPE BACKFILL."
7. FOR PIPE TYPES THAT ARE NOT SMOOTH ON THE OUTSIDE (CORRUGATED OR PROFILE WALLS), BACKFILL GRADATIONS SHOULD BE SELECTED THAT WILL PERMIT THE FILLING OF THE CORRUGATION OR PROFILE VALLEY.
8. PVC PIPES OF DIAMETERS OTHER THAN SHOWN WILL NOT BE ALLOWED.
9. JOINTS FOR PVC PIPE SHALL MEET THE REQUIREMENTS FOR SOIL TIGHTNESS AS SPECIFIED IN AASHTO SECTION 26.4.2.4 AND 30.4.2 "AASHTO LRFD BRIDGE CONSTRUCTION SPECIFICATIONS." JOINTS SHALL BE INSTALLED PER MANUFACTURER'S RECOMMENDATIONS.

- LEGEND -

H = FILL HEIGHT (FT.)
D_O = OUTSIDE DIAMETER OF PIPE
MAX. = MAXIMUM
MIN. = MINIMUM

= STRUCTURAL BACKFILL MATERIAL

= UNDISTURBED SOIL

DATE	REVISION	DATE FILMED
2-27-14	REVISED GENERAL NOTE 1.	
12-15-11	REV GENERAL NOTES & MINIMUM COVER NOTE; DELETED SM3 MATERIAL	
11-17-10	ISSUED	

ARKANSAS STATE HIGHWAY COMMISSION

PLASTIC PIPE CULVERT (PVC F949)

STANDARD DRAWING PCP-2

INSTALLATION TYPE	**MATERIAL REQUIREMENTS FOR STRUCTURAL BACKFILL AND STRUCTURAL BEDDING
TYPE 1	AGGREGATE BASE COURSE (CLASS 4, 5, 6, OR 7)
TYPE 2	*SELECTED MATERIALS (CLASS SM-1, SM-2 OR SM-4) OR TYPE 1 INSTALLATION MATERIAL

*SM3 WILL NOT BE ALLOWED.

** STRUCTURAL BEDDING MATERIAL SHALL HAVE A MAXIMUM PARTICLE SIZE OF 1 INCH. STRUCTURAL BACKFILL MATERIAL SHALL BE FREE OF ORGANIC MATERIAL, STONES LARGER THAN 1.50 INCH IN GREATEST DIMENSION, OR FROZEN LUMPS.

STRUCTURAL BACKFILL AND STRUCTURAL BEDDING MATERIAL WILL NOT BE PAID FOR SEPARATELY, BUT COMPENSATION WILL BE CONSIDERED TO BE INCLUDED IN THE PRICE BID PER LINEAR FOOT OF POLYPROPYLENE PIPE.

MINIMUM TRENCH WIDTH BASED ON FILL HEIGHT "H"

PIPE DIAMETER	TRENCH WIDTH (FEET) "H" < 10'-0"	TRENCH WIDTH (FEET) "H" >OR= 10'-0"
18"	4'-6"	4'-6"
24"	5'-0"	6'-0"
30"	5'-6"	7'-6"
36"	6'-0"	9'-0"
42"	7'-0"	10'-6"
48"	8'-0"	12'-0"
60"	10'-0"	15'-0"

(1) NOTE:
12" MIN. (18" - 42" DIAMETERS)
24" MIN. (60" DIAMETER)

MINIMUM COVER VALUES, "H" SHALL INCLUDE A MINIMUM 12" OF PAVEMENT AND/OR BASE.

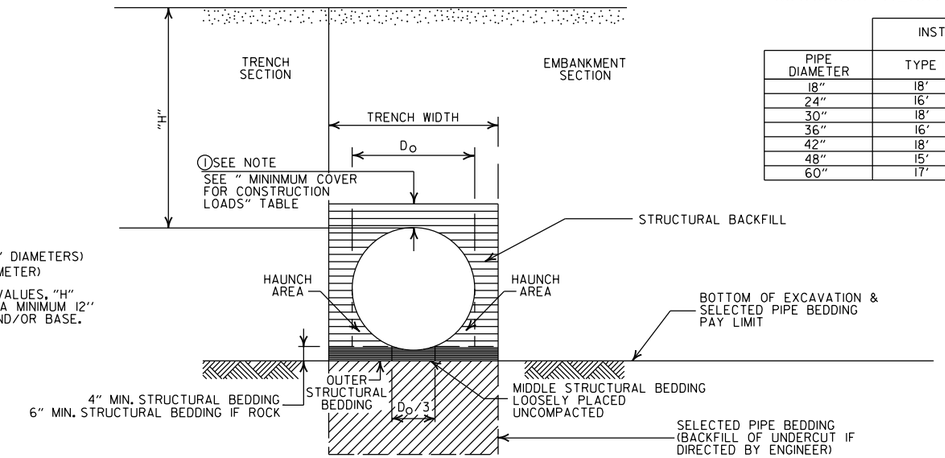

MAXIMUM HEIGHT OF FILL "H"

PIPE DIAMETER	INSTALLATION TYPE TYPE 1	INSTALLATION TYPE TYPE 2
18"	18'	14'
24"	16'	12'
30"	18'	14'
36"	16'	12'
42"	18'	13'
48"	15'	11'
60"	17'	12'

MULTIPLE INSTALLATION OF POLYPROPYLENE PIPES

PIPE DIAMETER	CLEAR DISTANCE BETWEEN PIPES
18"	1'-6"
24"	2'-0"
30"	2'-6"
36"	3'-0"
42"	3'-6"
48"	4'-0"
60"	5'-0"

MINIMUM COVER FOR CONSTRUCTION LOADS

PIPE DIAMETER	(2) MIN. COVER (FEET) FOR INDICATED CONSTRUCTION LOADS 18.0-50.0 (KIPS)	50.0-75.0 (KIPS)	75.0-110.0 (KIPS)	110.0-150.0 (KIPS)
36" OR LESS	2'-0"	2'-6"	3'-0"	3'-0"
42" OR GREATER	3'-0"	3'-0"	3'-6"	4'-0"

(2) MINIMUM COVER SHALL BE MEASURED FROM TOP OF PIPE TO TOP OF THE MAINTAINED CONSTRUCTION ROADWAY SURFACE. THE SURFACE SHALL BE MAINTAINED.

EMBANKMENT AND TRENCH INSTALLATIONS

1. STRUCTURAL BACKFILL, EMBANKMENT, AND OUTER STRUCTURAL BEDDING MATERIAL SHALL BE COMPACTED TO 95% OF THE MAXIMUM DENSITY ACCORDING TO THE TYPE OR CLASS OF MATERIAL USED.

CONSTRUCTION SEQUENCE

1. PLACE STRUCTURAL BEDDING MATERIAL TO GRADE. DO NOT COMPACT.
2. INSTALL PIPE TO GRADE.
3. COMPACT STRUCTURAL BEDDING OUTSIDE THE MIDDLE THIRD OF THE PIPE.
4. THE STRUCTURAL BACKFILL SHALL BE PLACED AND COMPACTED IN LAYERS NOT EXCEEDING 8". THE LAYERS SHALL BE BROUGHT UP EVENLY AND SIMULTANEOUSLY TO THE ELEVATION OF THE MINIMUM COVER.
5. PIPE INSTALLATION MAY REQUIRE THE USE OF RESTRAINTS, WEIGHTING OR OTHER APPROVED METHODS IN ORDER TO HELP MAINTAIN GRADE AND ALIGNMENT.

GENERAL NOTES

1. PIPE SHALL CONFORM TO AASHTO M330, TYPE S. INSTALLATION SHALL CONFORM TO JOB SPECIAL PROVISION "PLASTIC PIPE" AND SECTION 606 OF THE STANDARD SPECIFICIATIONS FOR HIGHWAY CONSTRUCTION (CURRENT EDITION).
2. PLASTIC PIPE CULVERT DESIGN SHALL CONFORM TO AASHTO LRFD BRIDGE DESIGN SPECIFICATIONS, SIXTH EDITION (2012) WITH 2013 INTERIMS.
3. THE MAXIMUM ALLOWABLE TRENCH WIDTH SHALL BE THE MINIMUM WIDTH PLUS A SUFFICIENT WIDTH TO ENSURE WORKING ROOM TO PROPERLY AND SAFELY PLACE AND COMPACT HAUNCHING AND OTHER BACKFILL MATERIAL.
4. IMPERVIOUS MATERIAL SHOULD BE PLACED AS DIRECTED BY THE ENGINEER AT THE ENDS OF THE CULVERT TO PREVENT LOSS OF STRUCTURAL BEDDING WHEN PERVIOUS MATERIAL IS USED FOR STRUCTURAL BEDDING AND/OR BACKFILL.
5. WHEN DIRECTED BY THE ENGINEER, UNSUITABLE MATERIAL THAT IS ENCOUNTERED AT THE BOTTOM OF THE EXCAVATED TRENCH (BELOW THE AREA IDENTIFIED AS "STRUCTURAL BEDDING" ABOVE) WILL BE EXCAVATED AND REPLACED WITH SELECTED PIPE BEDDING. THE QUANTITY OF MATERIAL REQUIRED TO BACKFILL THE UNDERCUT AREA UP TO THE SELECTED PIPE BEDDING PAY LIMIT DESIGNATED ABOVE WILL BE MEASURED AND PAID FOR AS "SELECTED PIPE BEDDING."
6. WHEN THE EXISTING MATERIAL EXCAVATED FOR THE PIPE TRENCH IS DETERMINED BY THE ENGINEER TO BE UNSUITABLE FOR BACKFILLING THE PIPE (ABOVE THE AREA IDENTIFIED ABOVE AS STRUCTURAL BACKFILL), BORROW MATERIAL OR MATERIAL FROM THE ROADWAY EXCAVATION WILL BE USED TO BACKFILL THE PIPE. IF SUITABLE MATERIAL IS NOT AVAILABLE, THE ENGINEER MAY AUTHORIZE THE USE OF "SELECTED PIPE BACKFILL."
7. FOR PIPE TYPES THAT ARE NOT SMOOTH ON THE OUTSIDE (CORRUGATED OR PROFILE WALLS), BACKFILL GRADATIONS SHOULD BE SELECTED THAT WILL PERMIT THE FILLING OF THE CORRUGATION OR PROFILE VALLEY.
8. POLYPROPYLENE PIPES OF DIAMETERS OTHER THAN SHOWN WILL NOT BE ALLOWED.
9. JOINTS FOR POLYPROPYLENE PIPE SHALL MEET THE REQUIREMENTS FOR SOIL TIGHTNESS AS SPECIFIED IN SECTION 26.4.2.4 AND 30.4.2 OF THE AASHTO LRFD BRIDGE CONSTRUCTION SPECIFICATIONS 3RD EDITION (2010) WITH 2012 INTERIMS. JOINTS SHALL BE INSTALLED PER MANUFACTURER'S RECOMMENDATIONS.

- LEGEND -

H = FILL HEIGHT (FT.)
D_O = OUTSIDE DIAMETER OF PIPE
MAX. = MAXIMUM
MIN. = MINIMUM

= STRUCTURAL BACKFILL MATERIAL
= UNDISTURBED SOIL

DATE	REVISION	DATE FILMED
02-27-20	REVISED	
11-07-19	ISSUED	

ARKANSAS STATE HIGHWAY COMMISSION

PLASTIC PIPE CULVERT (POLYPROPYLENE)

STANDARD DRAWING PCP-3

NOTES:

1. REFER TO THE STRIPING DETAILS FOR PAVEMENT MARKING LINE WIDTHS.
2. THIS DRAWING SHALL BE USED IN CONJUNCTION WITH THE LATEST REVISED ADDITION OF THE "MANUAL ON UNIFORM TRAFFIC CONTROL DEVICES."
3. RAISED PAVEMENT MARKERS SHALL BE PLACED ON AN 80 FEET SPACING UNLESS OTHERWISE SHOWN IN THE PLANS.

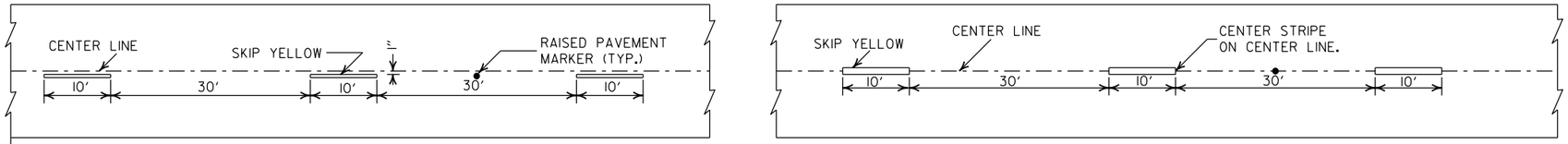

CONCRETE PAVEMENT

ASPHALT PAVEMENT

BROKEN LINE STRIPING

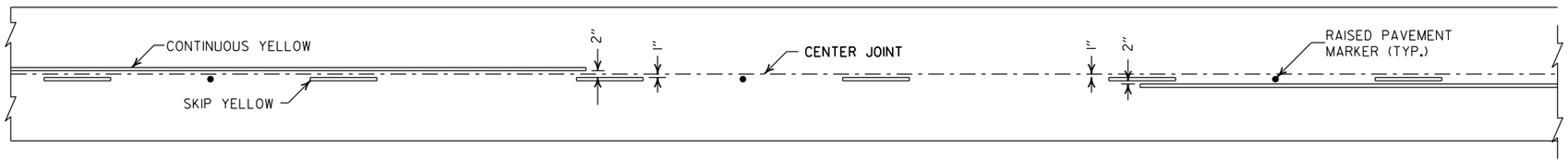

SOLID LINE STRIPING ON CONCRETE PAVEMENT

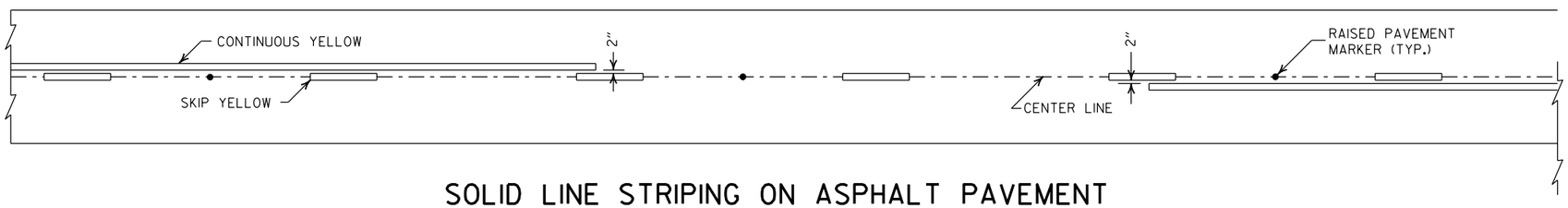

SOLID LINE STRIPING ON ASPHALT PAVEMENT

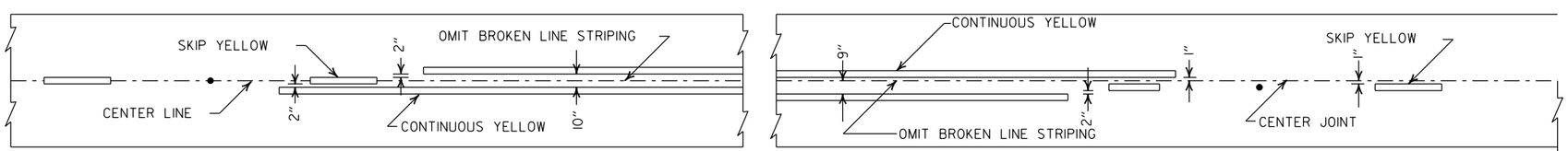

ASPHALT PAVEMENT

CONCRETE PAVEMENT

STRIPING AT ADJACENT NO PASSING LANES

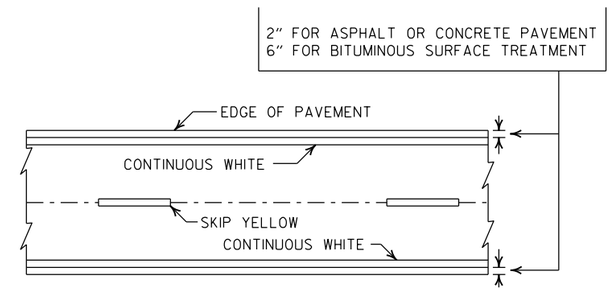

PAVEMENT EDGE LINE MARKING

NOTE:
THE RED LENS OF THE TYPE II R.P.M. SHALL FACE THE INCORRECT TRAFFIC MOVEMENT.

NOTE:
DIMENSIONS SHOWN FOR RAISED PAVEMENT MARKERS ARE TYPICAL. THE CONTRACTOR MAY SUBSTITUTE SIMILAR MARKERS WITH THE APPROVAL OF THE ENGINEER. REQUESTING APPROVAL FOR SIMILAR MARKERS MAY BE MADE BY REFERRING TO THE ARDOT QUALIFIED PRODUCTS LIST.

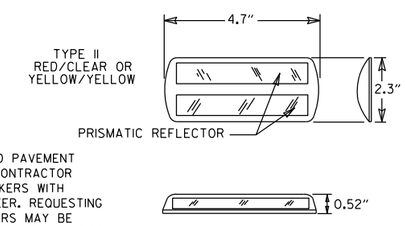

DETAIL OF STANDARD RAISED PAVEMENT MARKERS

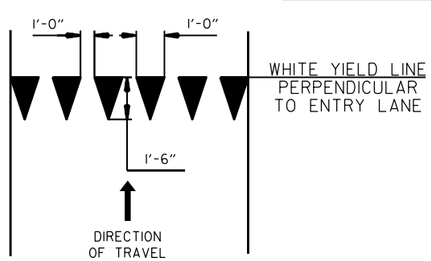

YIELD LINE DETAIL

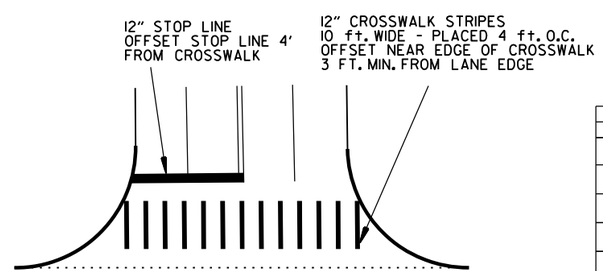

CROSSWALK AND STOP LINE DETAILS

DATE	REVISION	FILMED
2-27-20	REVISED STOP LINE DETAILS	
6-1-17	ADDED YIELD LINE DETAIL	
5-12-16	REVISED LINE WIDTHS, SPACING, & NOTES	
9-12-13	REVISED DETAIL OF STANDARD RAISED PAVEMENT MARKERS	
11-17-10	REVISED GENERAL NOTES & REMOVED PLOWABLE PVMT MRKRS	
11-18-04	REVISED NOTE 2 & GENERAL NOTES	
8-22-02	ADDED CROSSWALK & STOPBAR DTLS.	
7-02-98	ADDED DETAILS OF STD. RAISED PAV'T. MARKERS	
4-26-96	REV. NOTES 3&4; ADDED R.P.M.	
9-30-80	DRAWN	1-9-30-80

ARKANSAS STATE HIGHWAY COMMISSION

PAVEMENT MARKING DETAILS

STANDARD DRAWING PM-1

NOTE:

1. UNLESS OTHERWISE SPECIFIED ON THE PLANS, THE UNDERDRAIN COVER SHALL BE THOROUGHLY COMPACTED EARTH AND SHALL BE SUBSIDIARY TO PIPE UNDERDRAIN.

2. GRANULAR MATERIAL SHALL BE WRAPPED WITH GEOTEXTILE FABRIC. LAP FABRIC 12" OR THE WIDTH OF THE TRENCH AT THE TOP.

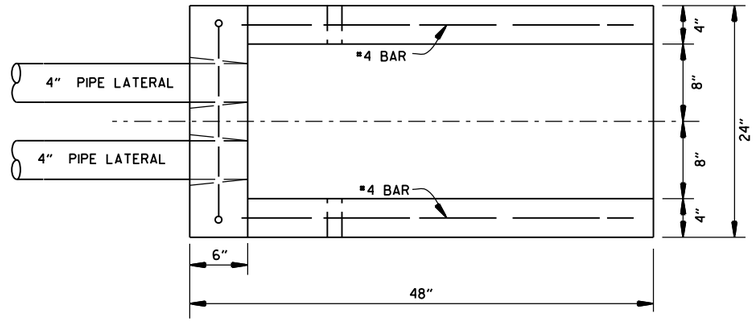

PLAN VIEW

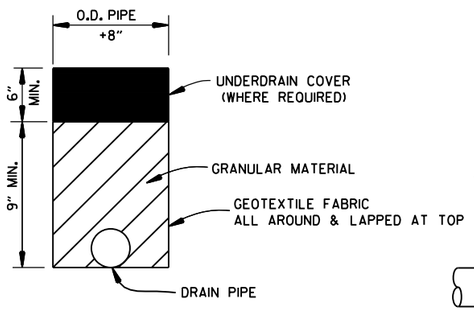

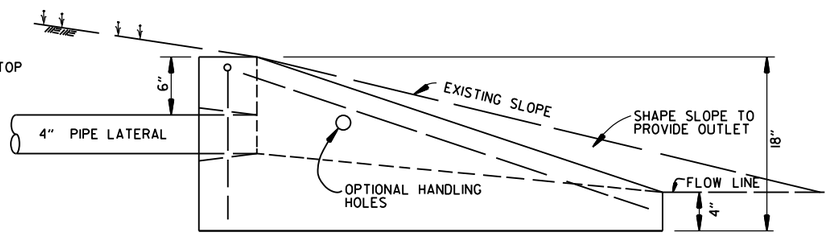

SIDE VIEW

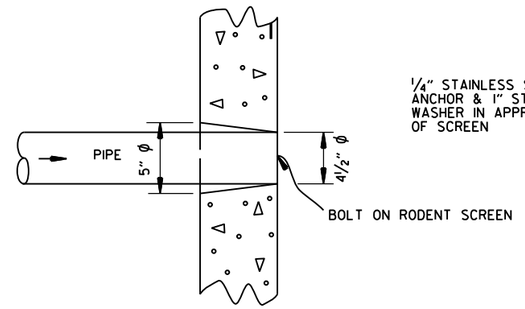

DETAIL OF HOLE
FOR 4" PIPE

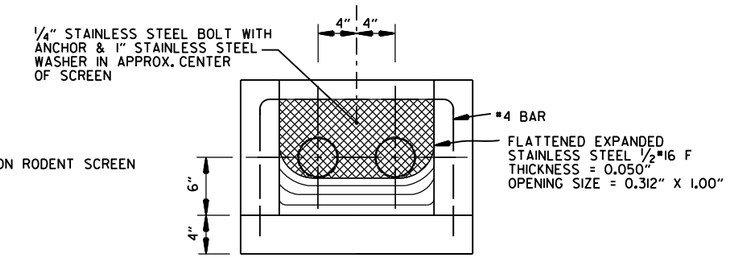

FRONT VIEW
(DETAIL OF RODENT SCREEN)

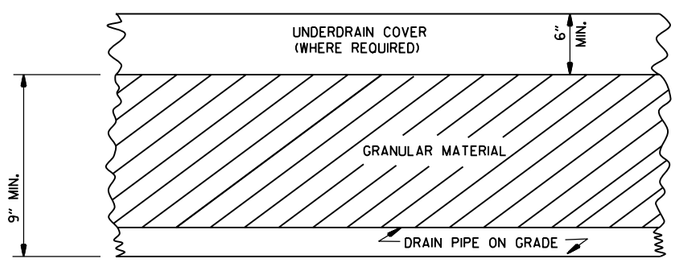

DETAILS OF PIPE UNDERDRAIN

UNDERDRAIN OUTLET PROTECTORS

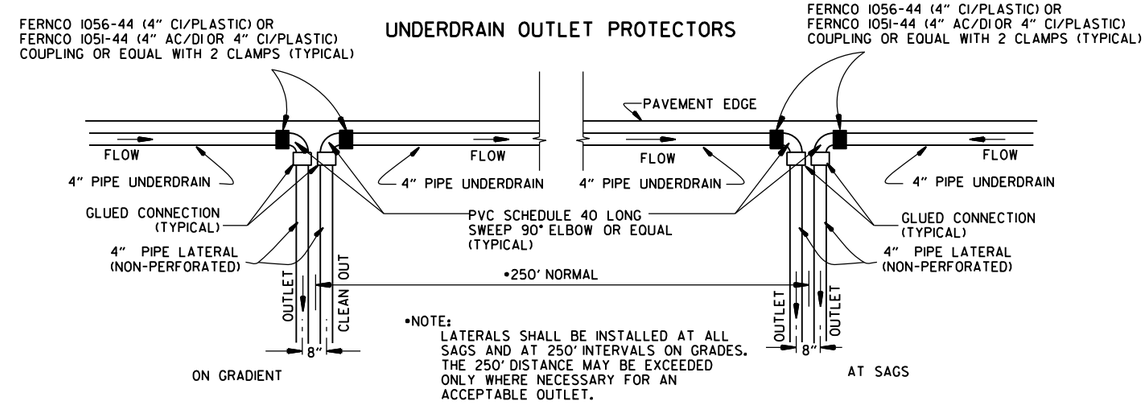

•NOTE:
LATERALS SHALL BE INSTALLED AT ALL SAGS AND AT 250' INTERVALS ON GRADES. THE 250' DISTANCE MAY BE EXCEEDED ONLY WHERE NECESSARY FOR AN ACCEPTABLE OUTLET.

DETAIL OF PIPE UNDERDRAIN LATERALS WHEN PLACED ALONG PAVEMENT EDGE

NOTE: PVC PIPE FOR LATERALS SHALL MEET THE REQUIREMENTS OF ASTM D 1785 (LATEST REVISION) FOR SCHEDULE 40 PIPE.

NOTES FOR PIPE UNDERDRAINS

1. GEOTEXTILE FABRIC SHALL MEET THE REQUIREMENTS OF SECTION 625 FOR TYPE I. PAYMENT FOR GEOTEXTILE FABRIC AND GRANULAR FILTER MATERIAL SHALL BE INCLUDED IN THE PRICE BID PER LIN. FT. FOR "4" PIPE UNDERDRAINS" IN ACCORDANCE WITH SECTION 611 OF THE STANDARD SPECIFICATIONS.

2. 4" NON-PERFORATED SCHEDULE 40 PVC PIPE LATERALS WITH OUTLET PROTECTORS SHALL BE INSTALLED AS SHOWN HEREON. LATERALS WILL BE MEASURED AND PAID FOR AS "4" PIPE UNDERDRAINS." UNDERDRAIN OUTLET PROTECTORS WILL BE MEASURED AND PAID FOR BY THE UNIT IN ACCORDANCE WITH SECTION 611 OF THE STANDARD SPECIFICATIONS.

3. EXISTING 4" PIPE UNDERDRAINS MAY BE CONNECTED TO PROPOSED DROP INLETS OR EXTENDED WHERE DIRECTED BY THE ENGINEER. PAYMENT FOR CONNECTING TO DROP INLETS SHALL BE CONSIDERED INCLUDED IN THE PRICE BID FOR "4" PIPE UNDERDRAINS."

4. THE LOCATION OF ALL LATERALS SHALL BE MARKED WITH 4" X 12" PERMANENT PAVEMENT MARKING TAPE (TYPE III WHITE) AT THE OUTSIDE EDGE OF THE SHOULDER, PLACED TRANSVERSE TO TRAFFIC. PAYMENT FOR THIS WORK SHALL BE INCLUDED IN THE PRICE BID FOR THE VARIOUS CONTRACT ITEMS.

5. PAYMENT FOR THE RODENT SCREEN SHALL BE INCLUDED IN THE PRICE BID PER EACH FOR "UNDERDRAIN OUTLET PROTECTORS."

6. ANY EXISTING UNDERDRAINS THAT INTERFERE WITH INSTALLATION OF THE NEW UNDERDRAIN SYSTEM SHALL BE REMOVED AND DISPOSED OF AS DIRECTED BY THE ENGINEER. PAYMENT WILL BE CONSIDERED INCLUDED IN THE PRICE BID FOR THE VARIOUS CONTRACT ITEMS. EXISTING UNDERDRAIN OUTLET PROTECTORS SHALL BE REMOVED UNDER THE ITEM "REMOVAL AND DISPOSAL OF UNDERDRAIN OUTLET PROTECTORS."

7. AT LOCATIONS WHERE A SINGLE LATERAL IS USED THE CONTRACTOR SHALL HAVE THE FOLLOWING OPTIONS: 1. INSTALL OUTLET PROTECTOR AS SHOWN ON STANDARD DRAWING PU-1 AND GROUT THE UNUSED HOLE OR 2. INSTALL AN OUTLET PROTECTOR WITH A SINGLE HOLE.

DATE	REVISION	DATE FILMED
12-8-16	ADDED NOTES FOR PIPE UNDERDRAINS, REVISED RODENT SCREEN DETAIL AND NOTES, REMOVED NOTE 1 FOR GRANULAR MATERIAL, ADDED NOTE FOR GEOTEXTILE FABRIC	
4-10-03	REVISED NOTE 3	
1-12-00	REVISED DETAIL OF UNDERDRAIN LATERALS	
11-18-98	REVISED NOTE	
10-18-96	REVISED MIN. DEPTH & GEOTEXTILE FABRIC	
4-26-96	ADDED LATERAL NOTE; 5½" TO 5"	
11-22-95	REVISED LATERALS	
7-20-95	REVISED LATERALS & ADDED NOTE	
11- 3-94	REVISED FOR DUAL LATERALS	11- 3-94
10- 1-92	SUBSTITUTED GEOTEXTILE	10- 1-92
8-15-91	ADDED POLYEDTHYLENE PIPE	8-15-91
11- 8-90	DELETED ALTERNATE NOTE	11- 8-90
1-25-90	ADDED 4" SNAP ADAPTER	1-25-90
11-30-89	DEL. (SUBGRADE); ADDED (WHERE REQUIRED)	11-30-89
7-15-88	ISSUED P.L.M.	647-7-15-88

ARKANSAS STATE HIGHWAY COMMISSION

DETAILS OF PIPE UNDERDRAIN

STANDARD DRAWING PU-1

DRAWER PLAN VIEW

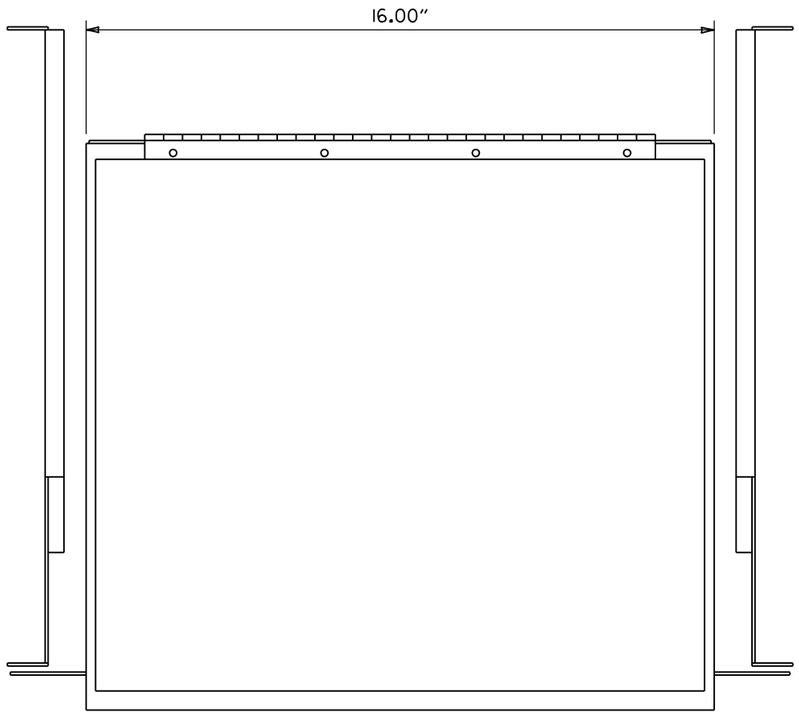

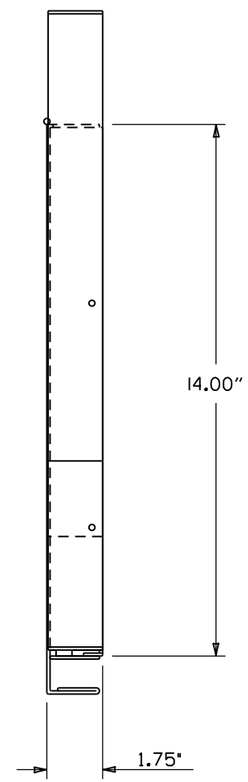

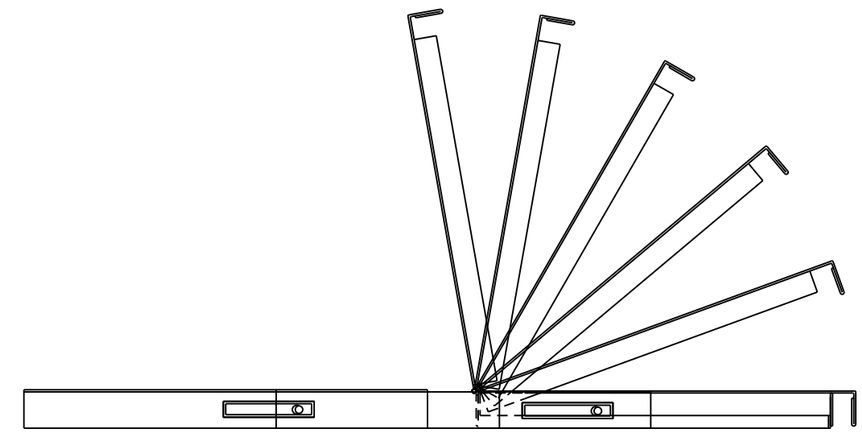

NOTES:
1. RIGHT HAND SLIDE SHOWN. LEFT SLIDE OPPOSITE.
2. GENERAL DEVICES (CC3002-99-0102) OR EQUAL AND CONTAINS (1) RIGHT HAND SLIDE ASSEMBLY, (1) LEFT HAND SLIDE ASSEMBLY.
3. ALL HARDWARE NECESSARY TO FASTEN SLIDE ASSEMBLY TO UNDERSIDE OF CONTROLLER SHELF SHALL BE INCLUDED.

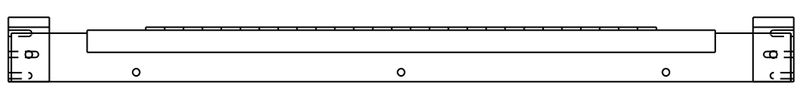

FRONT VIEW

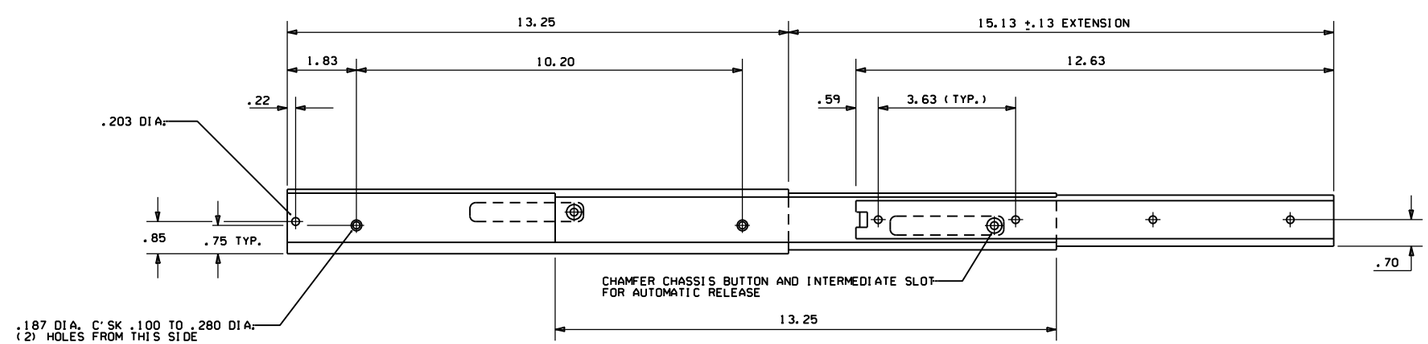

RIGHT SIDE ASSEMBLY

DATE	REVISION	DATE FILM
9-12-13	ISSUED AS STANDARD DRAWING	
6-15-05	ISSUED	

ARKANSAS STATE HIGHWAY COMMISSION

CONTROLLER CABINET UTILITY DRAWER

STANDARD DRAWING SD-5

CONDUIT ENTRY TO EXISTING POLE BASE

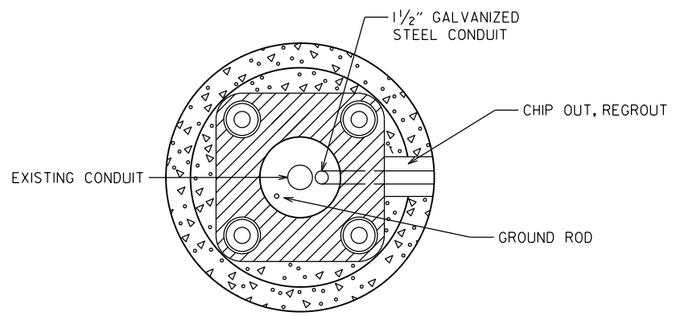

ANCHOR BASE

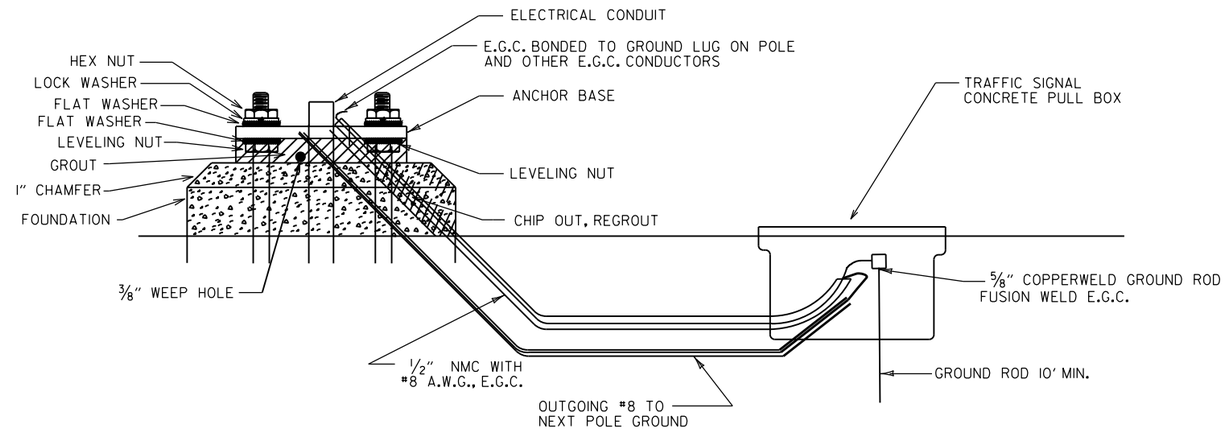

CONDUIT ENTRY TO EXISTING CONTROLLER CABINET

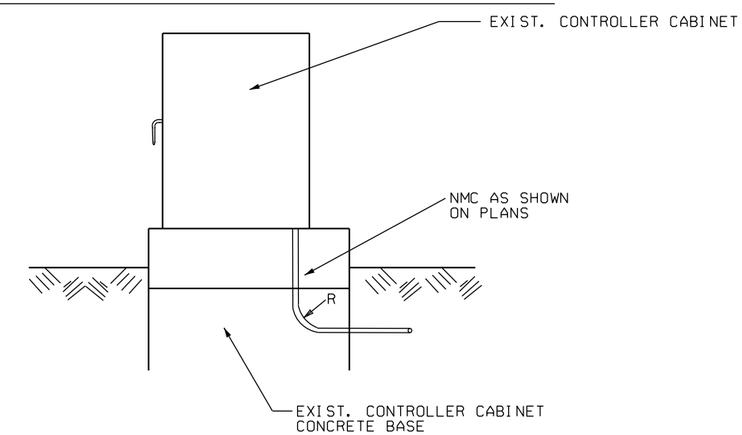

NOTE: ENTRY TO CABINET SHALL BE THROUGH A CUT IN THE BASE SUFFICIENT TO PROVIDE ADEQUATE CONDUIT RADIUS FOR ITEM.

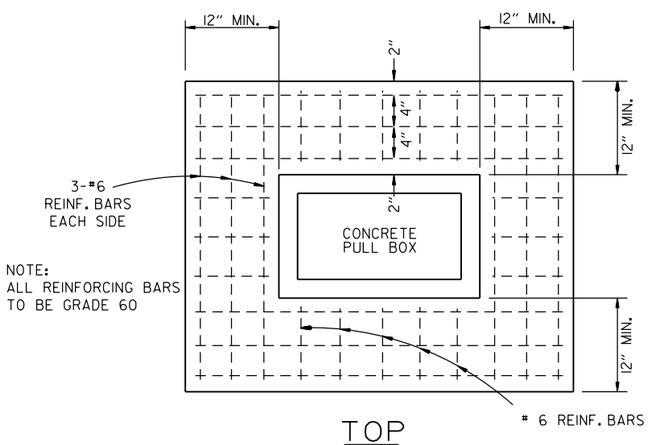

TOP

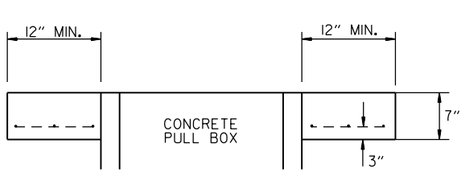

ELEVATION

TYPE "HD" CONCRETE PULL BOX DETAIL

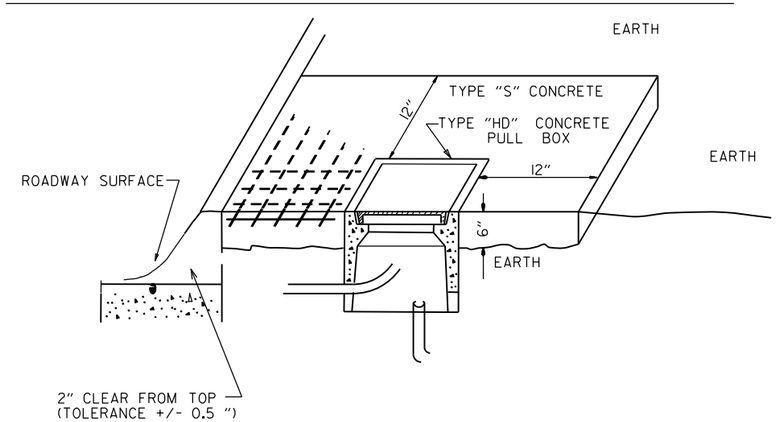

NOTE:
ALL TYPE 1 AND TYPE 2 HD CONCRETE PULL BOXES ARE INSTALLED WITH AN APRON OF CONCRETE 12" WIDE AND 7" IN DEPTH. ALL PAYMENT SHALL BE INCLUDED IN THE PRICE OF THE TYPE HD CONCRETE PULL BOX. THE CONCRETE PULL BOX SHALL BE INSTALLED FLUSH TO SURROUNDING GRADE UNLESS OTHERWISE INSTRUCTED BY THE ENGINEER. THE CONCRETE SHALL BE CLASS "S". THREE #6 REINFORCING BARS IN THE APRON ON ALL SIDES OF THE CONCRETE PULL BOX IS REQUIRED IN CONCRETE.

DATE	REVISION	FILMED
11-16-17	REVISED NOTES	
09-02-15	REVISED PULL BOX DEPTH	
09-12-13	ISSUED AS STANDARD DRAWING	
05-21-09	REVISED GROUNDING	
07-31-08	ADDED & REVISED CONDUIT ENTRY	
06-23-04	REVISED CLEARANCE AT CURB ENTRY	
01-04-02	ADDED REINFORCING TO BOX APRON	
07-02-01	REVISED	
12-27-99	REVISED NOTES	
11-18-98	ISSUED	

ARKANSAS STATE HIGHWAY COMMISSION

HEAVY DUTY PULL BOX

STANDARD DRAWING SD-6

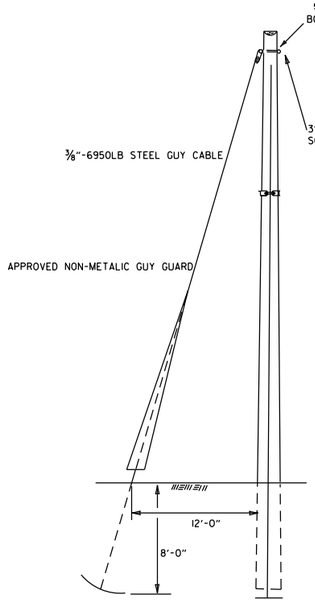

NOTE:
EXPANDING ANCHOR SHALL BE 6000# STRAIN OR GREATER. IT SHALL BE A "NEW CHANCE 8-WAY EXPANDING ANCHOR", WITH A 5/8" MINIMUM GUY ROD.

STANDARD GUY INSTALLATION

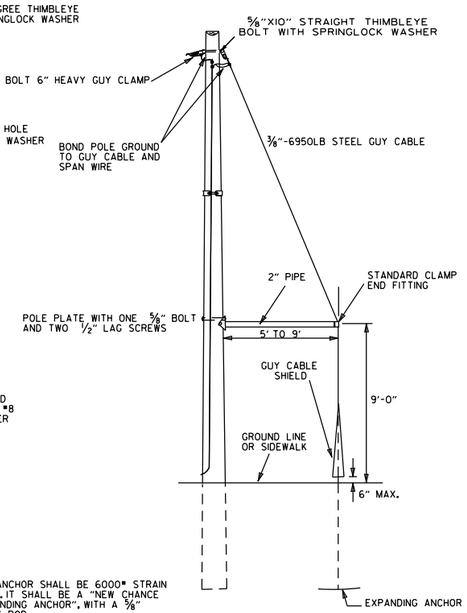

SIDEWALK GUY INSTALLATION

NOTE:
CONDUIT INSTALLATION MAY BE ADJUSTED BY THE ENGINEER TO MEET FIED CONDITIONS.

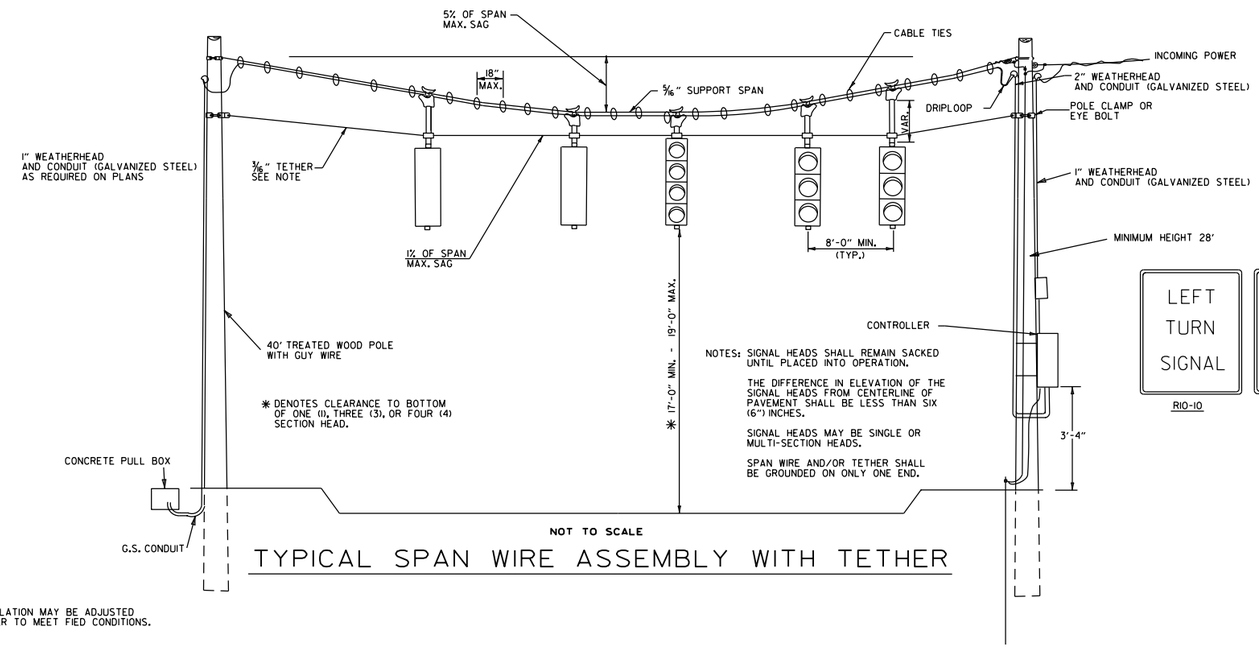

NOTES: SIGNAL HEADS SHALL REMAIN SACKED UNTIL PLACED INTO OPERATION.

THE DIFFERENCE IN ELEVATION OF THE SIGNAL HEADS FROM CENTERLINE OF PAVEMENT SHALL BE LESS THAN SIX (6") INCHES.

SIGNAL HEADS MAY BE SINGLE OR MULTI-SECTION HEADS.

SPAN WIRE AND/OR TETHER SHALL BE GROUNDED ON ONLY ONE END.

NOT TO SCALE

TYPICAL SPAN WIRE ASSEMBLY WITH TETHER

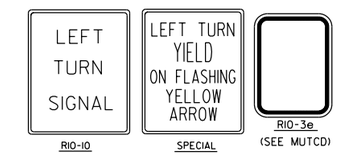

R10-10 SPECIAL R10-3e (SEE MUTCD)

NOTES:
SPAN WIRE POLES SHALL BE MOUNTED A MINIMUM OF FOUR (4') FEET BEHIND CURB OR SHOULDER.

SPAN WIRE ASSEMBLIES WILL REQUIRE TETHER UNLESS OTHERWISE NOTED ON PLAN SHEETS.

CABLE TIES SHALL BE SUITABLE FOR OUTSIDE USE (BLACK).

THE CONTROLLER POWER SUPPLY GROUND BUSS SHALL BE BONDED TO THE FOUNDATION GROUND ROD WITH A #8 A.W.G. SOLID COPPER WIRE. ON EXISTING FOUNDATIONS WITH NO GROUND ROD. CONTRACTOR SHALL INSTALL A 10' X 5/8" COPPERWELD GROUND ROD.

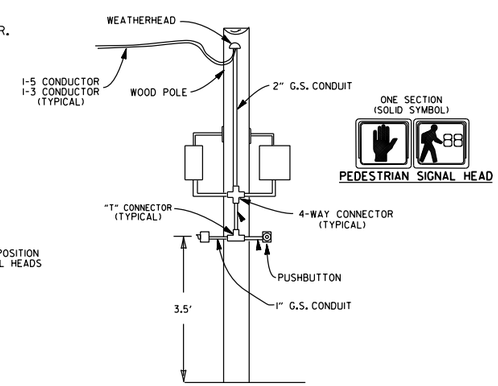

WOODEN POLE INSTALLATION OF PED HEADS

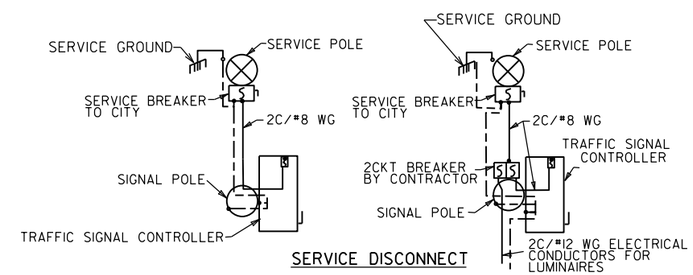

SERVICE DISCONNECT

NO LUMINAIRE WITH LUMINAIRE

NOTE: ELECTRICAL GROUND CONDUCTOR IS BONDED TO ALL METAL ENCLOSURES

NOTES:

EACH ITEM "TRAFFIC SIGNAL HEAD (4 SEC., 1-WAY)" SHALL INCLUDE A SPECIAL SIGN AS SHOWN, ATTACHED TO THE MAST ARM OR SPAN ASSEMBLY 12" TO THE RIGHT OF THE SIGNAL HEAD UNLESS REMOVED WITHIN SIGNAL PLAN NOTES.

EACH ITEM "TRAFFIC SIGNAL HEAD (3 SEC., 1-WAY)", TO BE USED AS A LEFT TURN INDICATION ONLY, SHALL INCLUDE A SIGN (R10-10) AS SHOWN, ATTACHED TO THE MAST ARM OR SPAN ASSEMBLY 12" TO THE RIGHT OF THE SIGNAL HEAD.

ALL SIGN BLANK SHALL BE CONSTRUCTED OF ALUMINUM ALLOY (ASTM DESIGNATION B-209, ALLOY 5052-H38) WITH A THICKNESS OF 0.100 INCH.

ALL SIGN FACE SHALL BE CONSTRUCTED OF HIGH INTENSITY SHEETING (TYPE III) WITH SILKSCREEN LEGEND AND BORDER.

SIGNAL OPERATION NOTES:

FLASHING OPERATION - PRIOR TO NORMAL OPERATION, SIGNAL SHALL BE FLASHED FOR A PERIOD OF 3 TO 5 WORK DAYS. SIGNAL SHALL BE PLACED IN OPERATION ONLY ON A REGULAR WORK DAY, EXCEPT FRIDAY.

THE CONTRACTOR MAY BE REQUIRED TO ALTER THE FLASHING DISPLAY DURING THE TEMPORARY FLASH PERIOD. AT THE TIME THE INTERSECTION IS PLACED IN PERMANENT OPERATION, THE FLASH SEQUENCE SHALL THEN BE RETURNED TO THAT INDICATED ON THE PLAN SHEETS. NO ADDITIONAL COMPENSATION SHALL BE ALLOWED FOR THESE ALTERATIONS IN FLASH SEQUENCE.

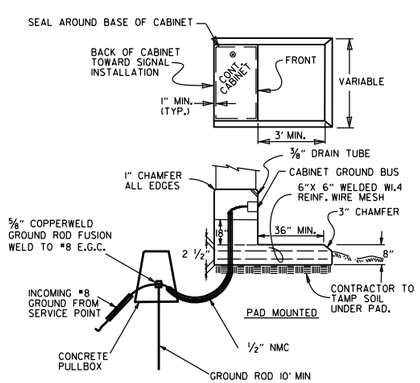

CONCRETE BASE MOUNTED CABINET DETAILS

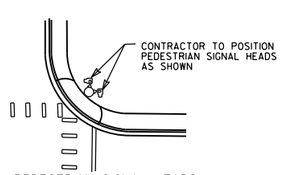

PEDESTRIAN SIGNAL HEADS

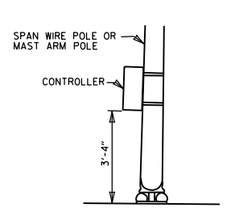

SPAN WIRE SUPPORT POLE AND MAST ARM POLE MOUNTED

CABINET NOTE:

UNLESS OTHERWISE DIRECTED BY THE ENGINEER, CABINET ORIENTATION SHALL BE SUCH THAT THE BACK OF THE CABINET IS PARALLEL TO THE STREET AND POSITIONED TO ALLOW VISIBILITY OF THE SIGNAL DISPLAY WHILE OBSERVING THE CONTROLLER FRONT PANEL.

MINIMUM STRUCTURAL REQUIREMENTS:

DESIGN SPECIFICATIONS: AASHTO STANDARD SPECIFICATIONS FOR STRUCTURAL SUPPORTS FOR HIGHWAY SIGNS, LUMINAIRES AND TRAFFIC SIGNALS, 4TH EDITION (2001) WITH 2003 AND 2006 INTERIMS.

CONSTRUCTION SPECIFICATIONS: STANDARD SPECIFICATIONS FOR HIGHWAY CONSTRUCTION (CURRENT EDITION) WITH APPLICABLE SUPPLEMENTAL SPECIFICATIONS AND SPECIAL PROVISIONS.

BASE WIND SPEED: 90 MPH

STEEL MEMBERS CONSIDERED MAIN LOAD CARRYING MEMBERS WITH THICKNESS GREATER THAN 1/2" SHALL MEET THE LONGITUDINAL CHARPY V-NOTCH TEST SPECIFIED IN SUBSECTION 807.05 OF THE STANDARD SPECIFICATIONS.

DATE	REVISION	FILMED
11-16-17	REVISED NOTES, ADDED SPAN WIRE SUPPORT POLE DETAIL, ADDED PEDESTRIAN SIGNAL HEAD DETAIL	
02-27-14	REVISED NOTES.	
09-12-13	ISSUED AS STANDARD DRAWING	
07-21-11	REVISED PEDESTRIAN SIGN & GROUNDING	
04-17-08	REVISED TO 2001 AASHTO STANDARDS	
10-12-04	REV. CABINET ORIENTATION & SIGNAL OPERATION	
05-22-02	REV. TYP. SPAN WIRE ASSEMBLY	
12-27-99	REVISED	
11-18-98	REVISION TO NOTES	
11-21-95	ISSUED	

ARKANSAS STATE HIGHWAY COMMISSION

SPAN WIRE ASSEMBLY
WOOD POLE

STANDARD DRAWING SD-7

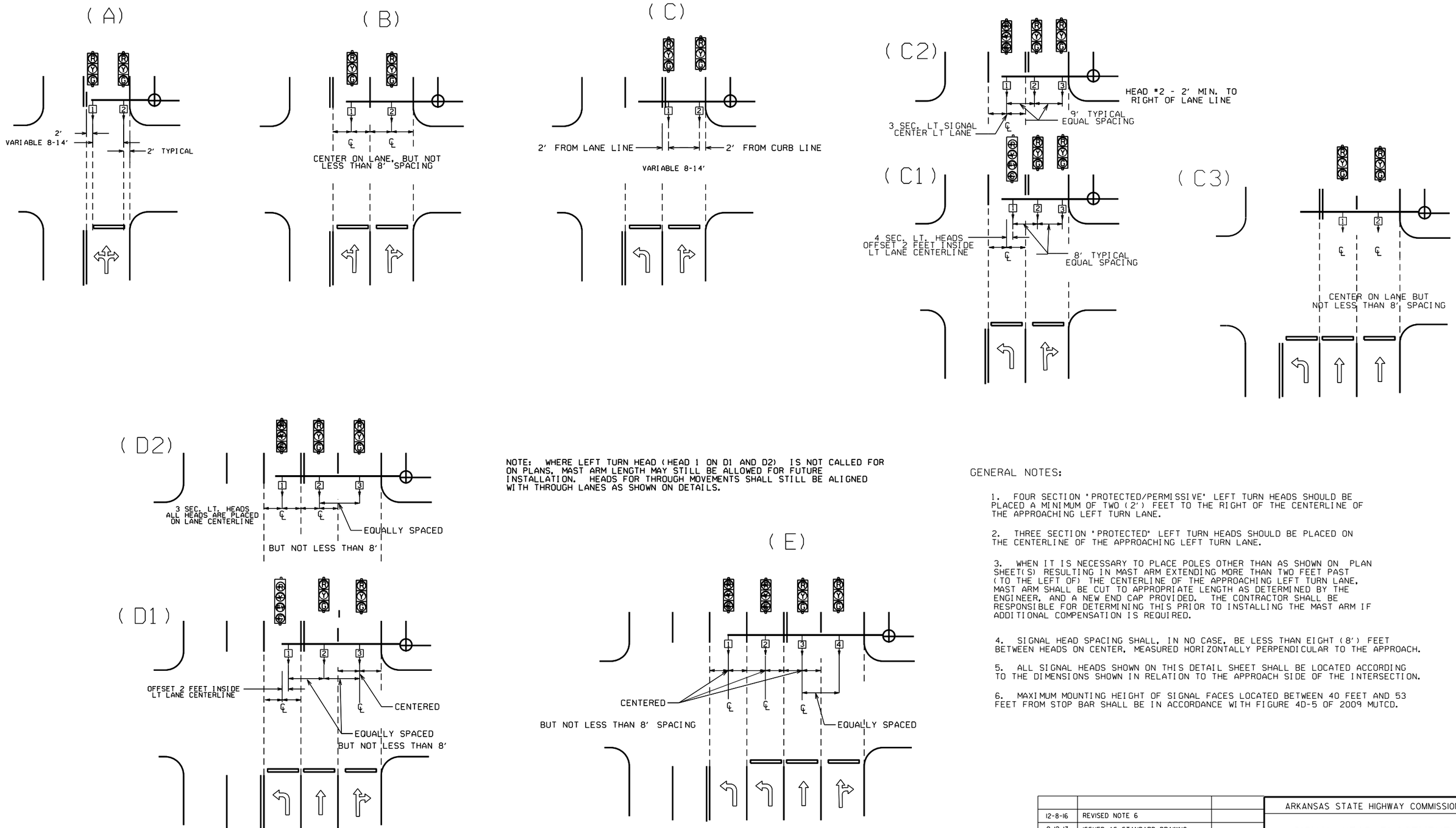

NOTE: WHERE LEFT TURN HEAD (HEAD 1 ON D1 AND D2) IS NOT CALLED FOR ON PLANS, MAST ARM LENGTH MAY STILL BE ALLOWED FOR FUTURE INSTALLATION. HEADS FOR THROUGH MOVEMENTS SHALL STILL BE ALIGNED WITH THROUGH LANES AS SHOWN ON DETAILS.

℄ = CENTER OF LANE FROM APPROACH SIDE

GENERAL NOTES:

1. FOUR SECTION "PROTECTED/PERMISSIVE" LEFT TURN HEADS SHOULD BE PLACED A MINIMUM OF TWO (2') FEET TO THE RIGHT OF THE CENTERLINE OF THE APPROACHING LEFT TURN LANE.

2. THREE SECTION "PROTECTED" LEFT TURN HEADS SHOULD BE PLACED ON THE CENTERLINE OF THE APPROACHING LEFT TURN LANE.

3. WHEN IT IS NECESSARY TO PLACE POLES OTHER THAN AS SHOWN ON PLAN SHEET(S) RESULTING IN MAST ARM EXTENDING MORE THAN TWO FEET PAST (TO THE LEFT OF) THE CENTERLINE OF THE APPROACHING LEFT TURN LANE, MAST ARM SHALL BE CUT TO APPROPRIATE LENGTH AS DETERMINED BY THE ENGINEER, AND A NEW END CAP PROVIDED. THE CONTRACTOR SHALL BE RESPONSIBLE FOR DETERMINING THIS PRIOR TO INSTALLING THE MAST ARM IF ADDITIONAL COMPENSATION IS REQUIRED.

4. SIGNAL HEAD SPACING SHALL, IN NO CASE, BE LESS THAN EIGHT (8') FEET BETWEEN HEADS ON CENTER, MEASURED HORIZONTALLY PERPENDICULAR TO THE APPROACH.

5. ALL SIGNAL HEADS SHOWN ON THIS DETAIL SHEET SHALL BE LOCATED ACCORDING TO THE DIMENSIONS SHOWN IN RELATION TO THE APPROACH SIDE OF THE INTERSECTION.

6. MAXIMUM MOUNTING HEIGHT OF SIGNAL FACES LOCATED BETWEEN 40 FEET AND 53 FEET FROM STOP BAR SHALL BE IN ACCORDANCE WITH FIGURE 4D-5 OF 2009 MUTCD.

DATE	REVISION	DATE FILM
12-8-16	REVISED NOTE 6	
9-12-13	ISSUED AS STANDARD DRAWING	
3-11-10	2009 MUTCD	
12-9-99	ISSUED	

ARKANSAS STATE HIGHWAY COMMISSION

SIGNAL HEAD PLACEMENT

STANDARD DRAWING SD-8

MAIN BREAKER NOT NEAR CONTROLLER CABINET SECONDARY REQUIRED

GROUND ROD - A 10' X 5/8" GROUND ROD SHALL BE INSTALLED IN THE CONCRETE PULL BOX FOR EACH POLE AND THE CONTROLLER. PAYMENT FOR THE GROUND ROD AND 1/2" NMC SHALL BE INCLUDED IN ITEM 701. THE CONCRETE PULL BOX AND CONDUCTOR BOX SHALL BE PAID FOR SEPARATELY.

WITH POWER ISOLATION ASSEMBLY

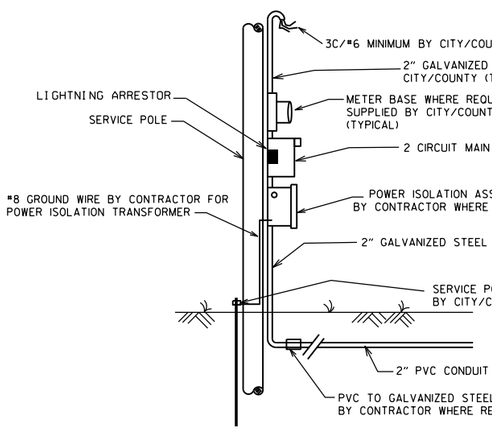

WITHOUT POWER ISOLATION ASSEMBLY

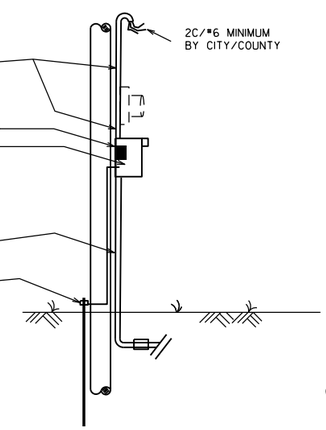

SECONDARY BREAKER BY CONTRACTOR (SUBSIDIARY)

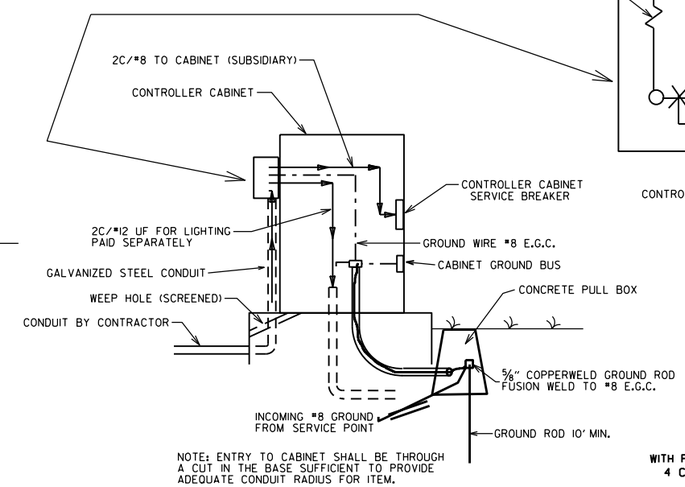

NOTE: ENTRY TO CABINET SHALL BE THROUGH A CUT IN THE BASE SUFFICIENT TO PROVIDE ADEQUATE CONDUIT RADIUS FOR ITEM.

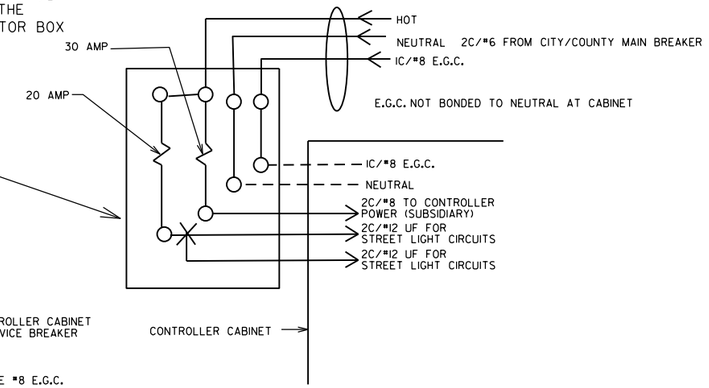

MAIN BREAKER WIRING (TYPICAL)

SERVICE GROUND IS TYPICALLY TIED TO NEUTRAL AT THE MAIN BREAKER. AS SUCH, CONTROLLER GROUND IS NOT TIED TO NEUTRAL AT SECONDARY BREAKER OR IN CONTROLLER CABINET.

NOTES TO CONTRACTOR AND AGENCY RESPONSIBLE FOR MAINTENANCE OF THE INTERSECTION (CITY/COUNTY):

ELECTRICAL SERVICE TYPICALLY FALLS INTO TWO CATEGORIES:
MAIN BREAKER NEAR CONTROLLER CABINET; AND MAIN BREAKER NOT NEAR CONTROLLER CABINET. THE CONTRACTOR'S AND THE CITY'S/COUNTY'S RESPONSIBILITY VARIES ACCORDINGLY AS INDICATED ON THESE DETAILS.

ALL SITUATIONS:
ELECTRICAL SERVICE SHALL BE PROVIDED BY THE CITY/COUNTY TO A SERVICE POLE WITH EXTERNAL RAINTIGHT BREAKER (MAIN BREAKER) AT A MUTUALLY ACCEPTABLE POINT WITHIN THE RIGHT-OF-WAY. SERVICE POINT INCLUDES GALVANIZED STEEL CONDUIT TO A POINT 18" BELOW GROUND LINE, TWO CIRCUIT MAIN BREAKER, LIGHTNING ARRESTOR, POWER ISOLATION ASSEMBLY WHERE REQUIRED, METER LOOP IF REQUIRED BY LOCAL UTILITY COMPANY, ELECTRICAL CONDUCTORS AND WEATHERHEAD. WHERE STREET LIGHTING IS INCLUDED AS PART OF SIGNAL INSTALLATION STREET LIGHTING CIRCUIT (2C/#12 A.W.G. UF RATED, TYPICAL) SHALL BE KEPT SEPARATE FROM THE CIRCUIT SERVING TRAFFIC SIGNAL. SERVICE WIRE AND WIRING FROM THE CONTROLLER TO MAIN BREAKER IS PROVIDED BY THE CONTRACTOR AS A PART OF THIS CONTRACT. WIRE AND WIRING FROM MAIN BREAKER, AND CONNECTION TO THE UTILITY IS THE RESPONSIBILITY OF THE CITY/COUNTY.

MAIN BREAKER NOT NEAR CONTROLLER CABINET:
THE MAIN BREAKER ASSEMBLY, GALVANIZED STEEL CONDUIT. WEATHERHEAD AND WIRE ABOVE MAIN BREAKER AND CONNECTION TO THE UTILITY SHALL BE PROVIDED BY CITY/COUNTY. CONTRACTOR SHALL PROVIDE AS PART OF CONTRACT SECONDARY BREAKER, CONDUIT, WIRE AND WIRING TO THE MAIN BREAKER.

MAIN BREAKER NEAR CONTROLLER CABINET:
ALL COMPONENTS OF THE SERVICE POINT WITH THE EXCEPTION OF THE WIRE AND WIRING ABOVE THE MAIN BREAKER IS FURNISHED AND INSTALLED BY THE CONTRACTOR. WIRING FROM MAIN BREAKER INCLUDING CONNECTION TO THE UTILITY, IS THE RESPONSIBILITY OF THE CITY/COUNTY. IF METER LOOP IS REQUIRED, METER BASE AND HARDWARE IS PROVIDED BY THE CITY/COUNTY AND INSTALLED BY THE CONTRACTOR.

WITH POWER ISOLATION ASSEMBLY
4 CIRCUIT MAIN BREAKER

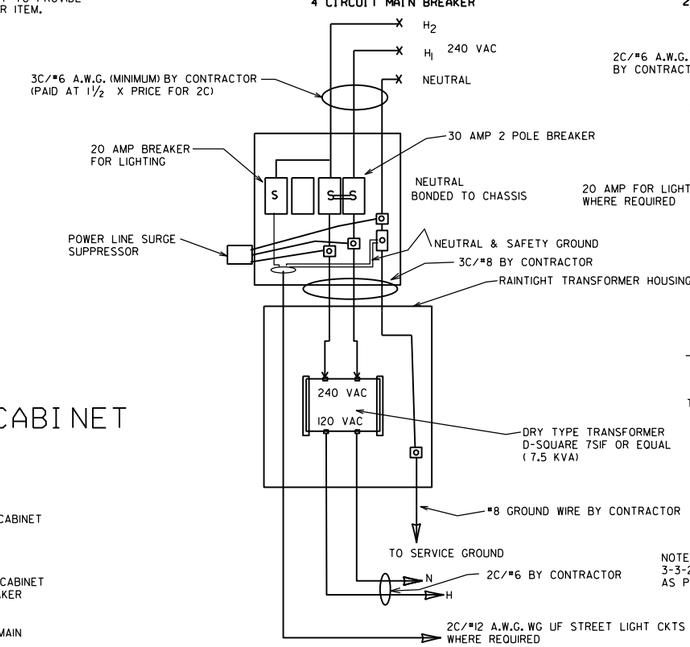

WITHOUT POWER ISOLATION ASSEMBLY
2 CIRCUIT MAIN BREAKER

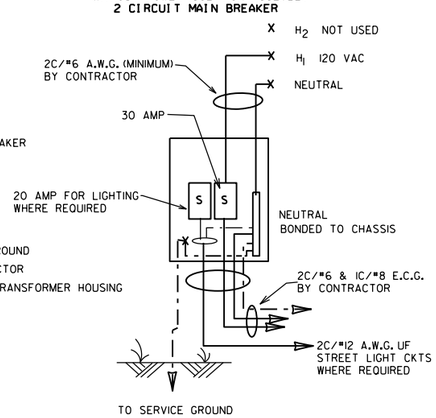

NOTE: ELECTRICAL GROUND CONDUCTOR (E.C.G.) ADDED 3-3-2003, CONSISTING OF A IC/#8 A.W.G. CU GREEN WIRE AS PER NATIONAL ELECT. CODES.

MAIN BREAKER NEAR CONTROLLER CABINET SECONDARY NOT REQUIRED

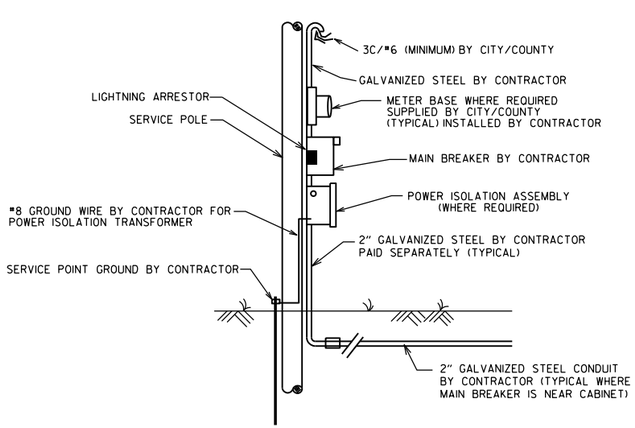

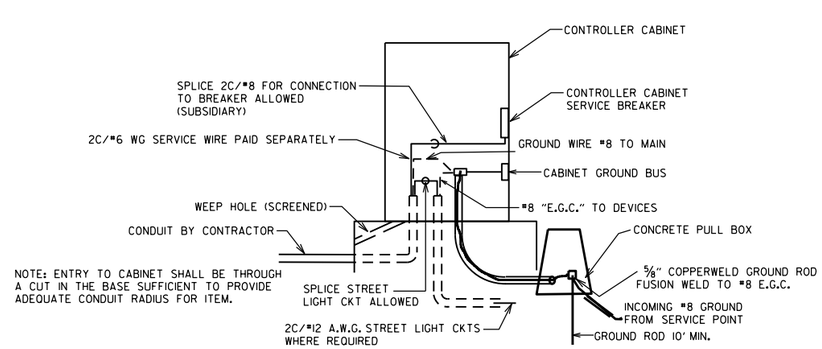

NOTE: ENTRY TO CABINET SHALL BE THROUGH A CUT IN THE BASE SUFFICIENT TO PROVIDE ADEQUATE CONDUIT RADIUS FOR ITEM.

DATE	REVISION	FILMED
11-07-19	REVISED	
11-16-17	REVISED NOTES	
09-12-13	ISSUED AS STANDARD DRAWING	
04-18-13	ADDED LIGHTNING ARRESTOR	
05-21-09	REVISED GROUNDING	
07-31-08	REVISED GROUNDING	
03-03-03	ADDED EGC NOTE	
09-26-01	REVISED	
12-27-99	REVISED	
07-28-99	REVISED	
02-05-99	ISSUED	

ARKANSAS STATE HIGHWAY COMMISSION

SERVICE POINT

STANDARD DRAWING SD-9

NOTES:
PEDESTRIAN AND TRAFFIC SIGNAL HEAD SIGNS:
EACH ITEM "TRAFFIC SIGNAL HEAD (4 SEC., 1-WAY)" SHALL INCLUDE A SPECIAL SIGN AS SHOWN, ATTACHED TO THE MAST ARM OR SPAN ASSEMBLY 12" TO THE RIGHT OF THE SIGNAL HEAD UNLESS REMOVED WITHIN THE SIGNAL PLAN NOTES.

EACH ITEM "TRAFFIC SIGNAL HEAD (3 SEC., 1-WAY)" TO BE USED AS A LEFT TURN INDICATION ONLY SHALL INCLUDE A SIGN (R10-10) AS SHOWN, ATTACHED TO THE MAST ARM OR SPAN ASSEMBLY 12" TO THE RIGHT OF THE SIGNAL HEAD.

EACH PEDESTRIAN PUSHBUTTON SHALL HAVE ONE R10-3E SIGN ATTACHED TO THE POLE ABOVE THE BUTTON. ALL SIGNS SHALL BE MANUFACTURED IN ACCORDANCE WITH SECTION 723 OF THE STANDARD SPECIFICATIONS FOR HIGHWAY CONSTRUCTION.

ALL SIGN BLANKS SHALL BE CONSTRUCTED OF ALUMINUM ALLOY (ASTM DESIGNATION B-209. ALLOY 5052-H38) WITH THICKNESS OF 0.100 INCH.

GENERAL NOTES:
1. MAST ARM POLES SHALL BE MOUNTED A MINIMUM OF FOUR (4') FEET BEHIND CURB OR SHOULDER.

2. OCTAGONAL POLES AND ARMS MEETING THE REQUIREMENTS OF THE PLANS SPECIFICATIONS CAN BE INSTALLED IN LIEU OF ROUND. ALL POLES AND ARMS IN A JOB MUST BE THE SAME SHAPE.

3. MINIMUM STRUCTURAL REQUIREMENTS:
DESIGN SPECIFICATIONS: AASHTO STANDARD SPECIFICATIONS FOR STRUCTURAL SUPPORTS FOR HIGHWAY SIGNS, LUMINAIRES AND TRAFFIC SIGNALS, 4TH EDITION (2001) WITH 2003 AND 2006 INTERIMS.

USE FATIGUE CATEGORY I FOR ALL STRUCTURES ON ROUTES WHERE THE SPEED LIMIT IS 65 MPH AND GREATER AT THE STRUCTURE LOCATION AND ON ROUTES WHERE THE SPEED LIMIT IS GREATER THAN 45 MPH WITH AN MAST ARM OF 60' OR LONGER.

USE FATIGUE CATEGORY II FOR ALL STRUCTURES ON ROUTES WHERE THE SPEED LIMIT IS LESS THAN 65 MPH AND GREATER THAN 45 MPH WITH MAST ARMS LESS THAN 60' AND ON ROUTES WHERE THE SPEED LIMITS OF 45 MPH AND LESS WITH AN MAST ARM OF 60' OR LONGER.

USE FATIGUE CATEGORY III FOR ALL STRUCTURES WHERE THE SPEED LIMIT IS 45 MPH AND LESS AND MAST ARMS LESS THAN 60'.

CONSTRUCTION SPECIFICATIONS:
STANDARD SPECIFICATIONS FOR HIGHWAY CONSTRUCTION (CURRENT EDITION) WITH APPLICABLE SUPPLEMENTAL SPECIFICATIONS AND SPECIAL PROVISIONS.

BASE WIND SPEED: 90 MPH.

STEEL MEMBERS CONSIDERED MAIN LOAD CARRYING MEMBERS WITH A THICKNESS GREATER THAN 1/2" SHALL MEET THE LONGITUDINAL CHARPY V-NOTCH TEST SPECIFIED IN SUBSECTION 807.05 OF THE STANDARD SPECIFICATIONS.

DEAD LOAD: AS A MINIMUM, DESIGN SHALL BE BASED ON THE FIXED ATTACHMENTS SHOWN BELOW OR AS MODIFIED IN THE PLANS.

ALL SIGNAL HEADS TO BE ONE WAY, TWELVE (12") INCH AND HAVE FIVE (5") INCH BACK PLATES:

SIGNAL HEADS AT THE END OF MAST ARM - ONE 4 SEC., 85 LB., 14.5 SQ. FT., ONE SIGN MOUNTED 3 FEET FROM SIGNAL HEAD (2'-0" X 2'-6"; 20 LB.) REMAINING SIGNAL HEADS SPACED AT 8 FT. (3 SEC., 56 LB., 8.3 SQ. FT.):
DESIGN TO ACCOMMODATE:
2 SIGNAL HEADS FOR MAST ARMS 10 FT. TO 16 FT.
3 SIGNAL HEADS FOR MAST ARMS 18 FT. TO 24 FT.
4 SIGNAL HEADS FOR MAST ARMS OVER 26 FT.

STREET NAME SIGN - 72" X 18", 36 LB., MOUNTED SUCH THAT OUTSIDE EDGE IS NOT GREATER THAT 12 FT. FROM POLE. DEPENDING UPON POSITION OF SIGNAL HEAD ADJACENT TO POLE, SIGN MAY OVERLAP POLE SHAFT.
ROADWAY LUMINAIRES (WHERE REQUIRED ON PLAN SHEET) - VARIABLE ARM LENGTH (MAX. WT. 75 LB., 3.3 SQ. FT.)
PEDESTRIAN SIGNALS - TWO 1 SEC., 12 INCH MOUNTED 8 FT. FROM BASE OF POLE. POST MOUNTED 3 SEC. SIGNAL HEAD AT 10 FT. ON SIDE OF POLE.

4. POLE/MAST ARM CAP - POLE AND MAST ARM CAPS SHALL BE PROVIDED, FABRICATED OF EITHER STEEL OR CAST ALUMINUM.

5. HAND HOLE - HAND HOLES SHALL BE 4 IN. X 6 IN. FOR STANDARD, AND 3 IN. X 5 IN. FOR PED POLES. MINIMUM PLACED APPROXIMATELY 12 INCHES FROM BASE, AND SHALL BE FIXED WITH A BOLT DOWN COVER. A VACCUM FORMED ABS COVER IS AN ACCEPTABLE ALTERNATE TO STEEL. POLES GREATER THAN 21 FT. IN HEIGHT (FOR ROADWAY LUMINAIRE ATTACHMENT) SHALL INCLUDED A HAND HOLE WITHIN 12 INCHES OF MAST ARM(S) ATTACHMENT(S).

6. POLE/MAST ARM TAPER SLOPE - AVERAGE TAPER OF SIGNAL MAST ARMS AND POLE SHAFT SHALL BE 0.125 TO 0.15 INCHES PER FOOT.

MAST ARM CENTERLINE ANGLE AT ATTACHMENT POINT WITH POLE SHALL MAINTAIN NOT LESS THAN 0.5 DEGREES OR MORE THAN 4 DEGREES POSITIVE SLOPE WITH A LINE PERPENDICULAR TO THE POLE CENTERLINE. THE MAST ARM SHALL MAINTAIN A POSITIVE SLOPE AFTER IT IS PLACED UNDER LOAD.

7. NUT COVERS - EACH POLE SHALL INCLUDE A BOLT DOWN NUT COVER FOR EACH ANCHOR BOLT.

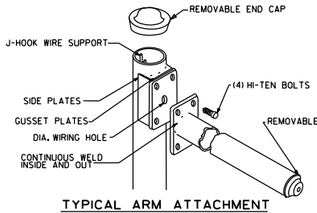

TYPICAL ARM ATTACHMENT

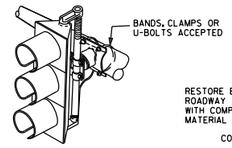

NOTE: THE SIGNAL SHALL BE CONNECTED TO THE MAST ARM BY BRACKETING AS DIRECTED BY THE ENGINEER.

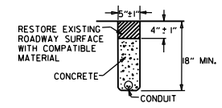

TRENCHING DETAIL
(FOR SAW CUT TRENCH IN ROADWAY)

* WHEN THE GROUND ELEVATION AT THE POLE IS LOWER THAN THE ROADWAY ELEVATION, THE LENGTH OF FOUNDATION ABOVE THE GROUND MAY BE INCREASED TO PROVIDE THE REQUIRED SIGNAL HEAD CLEARANCE ABOVE THE ROADWAY. WHEN THE REQUIRED LENGTH OF FOUNDATION ABOVE THE GROUND IS 18" OR LESS, NO INCREASE IN DEPTH "L" WILL BE REQUIRED. WHEN THE REQUIRED LENGTH OF FOUNDATION ABOVE THE GROUND IS 5'-6" OR LESS, INCREASE DEPTH "L" BY 1'-0". FOR LENGTHS GREATER THAN 5'-6", DEPTH "L" SHALL BE ADJUSTED AS DIRECTED BY THE ENGINEER. LONGITUDINAL REINFORCING, AS SHOWN IN THE TABLE, SHALL BE PROVIDED FOR THE LENGTH OF THE EXTENDED SHAFT AND #4 TIES SHALL BE PROVIDED AT A SPACING NOT TO EXCEED 9" ON CENTERS. PAYMENT WILL BE IN ACCORDANCE WITH SECTION 714 TRAFFIC SIGNAL MAST ARM AND POLE WITH FOUNDATION OF THE STANDARD SPECIFICATIONS.

* * IN LIEU OF DESIGNING THE STRUCTURE TO RESIST PERIODIC GALLOPING, A VIBRATORY MITIGATION DEVICE MAY BE PROVIDED BY THE POLE MANIFACTURER. THE VIBRATORY MITIGATION DEVICE SHALL BE AN ANTI-GALLOPING PANEL CONSISTING OF A 60" X 16" X 0.125" SIGN BLANK MOUNTED NEAR THE END OF THE MAST ARM NOT TO EXCEED ONE QUARTER OF THE LENGTH OF THE MAST ARM FROM THE END OF THE MAST ARM WITH THE LONG AXIS OF THE PANEL COLLINEAR WITH THE LONG AXIS OF THE MAST ARM. THE PANEL SHOULD BE MOUNTED AT SUCH THE HEIGHT AS TO PROVIDE AT LEAST 6" CLEAR FROM THE TOP OF ANY SIGNAL ASSEMBLY OF SIGN PANEL LOCATED ON THE MAST ARM WITHIN THE LENGTH OF THE ANTI-GALLOPING PANEL.

TRUCK-INDUCED GUST LOADS SHALL BE EXCLUDED FOR FATIGUE DESIGN FOR ALL STRUCTURES EXCEPT MAST ARMS MOUNTED OVER FACILITIES WITH POSTED SPEEDS OF 65 MPH OR GREATER AT THE LOCATION OF THE STRUCTURE.

SIGNAL OPERATION NOTES:

FLASHING OPERATION - PRIOR TO NORMAL OPERATION, SIGNAL SHALL BE FLASHED FOR A PERIOD OF 3 TO 5 WORK DAYS OR AS DIRECTED BY THE ENGINEER. SIGNAL SHALL BE PLACED IN OPERATION ONLY ON A REGULAR WORK DAY, EXCEPT FRIDAY.

THE CONTRACTOR MAY BE REQUIRED TO ALTER THE FLASHING DISPLAY DURING THE TEMPORARY FLASH PERIOD. AT THE TIME THE INTERSECTION IS PLACED IN PERMANENT OPERATION, THE FLASH SEQUENCE SHALL THEN BE RETURNED TO THAT INDICATED ON THE PLAN SHEETS. NO ADDITIONAL COMPENSATION SHALL BE ALLOWED FOR THESE ALTERATION IN FLASH SEQUENCE.

SPECIAL NOTE: 90 MPH WIND ZONE DESIGN, SEE NOTE 3. MINIMUM STRUCTURAL REQUIREMENTS.

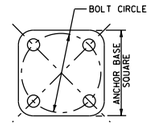

ANCHOR BASE

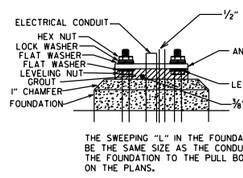

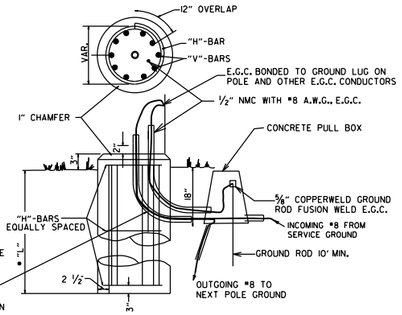

THE SWEEPING "L" IN THE FOUNDATION SHALL BE THE SAME SIZE AS THE CONDUIT FROM THE FOUNDATION TO THE PULL BOX AS SHOWN ON THE PLANS.

THE GROUND ROD SHALL BE FUSION WELDED TO A 1C/#8 A.W.G. SOLID COPPER GROUND WIRE. ATTACHMENT TO THE PRIMARY GROUND MAY BE BY AN APPROVED CLAMP. THE GROUND ROD IS TO BE LOCATED IN THE CONCRETE PULL BOX.

TYPICAL FOUNDATION DETAILS

POLE FOUNDATION MINIMUM DIMENSIONS AND STEEL REINFORCING. ALL REINFORCING STEEL SHALL BE GRADE 40 MIN.

ARM LENGTH	FOUNDATION DIAMETER	DEPTH "L"*	STEEL		
			VERTICAL	HORIZONTAL	O.C.
PED	30"	7'-0"	12-#7 (6'-6")	10-#4	8.44"
2' TO 12'	30"	10'-6"	12-#7 (10'-0")	15-#4	8.42"
OVER 12' TO 20'	30"	11'-6"	12-#7 (11'-0")	16-#4	8.66"
OVER 20' TO 35'	36"	12'-6"	13-#8 (12'-0")	17-#4	8.88"
OVER 35' TO 50'	36"	13'-6"	13-#8 (13'-0")	19-#4	8.56"
OVER 50' TO 72'	42"	14'-6"	18-#8 (14'-0")	20-#4	8.74"
TWINS TO 20'	30"	16'-0"	12-#6 (15'-6")	22-#4	8.76"
TWINS OVER 20' TO 44'	36"	16'-0"	13-#8 (15'-6")	22-#4	8.76"
TWINS OVER 44' TO 50'	42"	16'-0"	18-#8 (15'-6")	22-#4	8.76"
TWINS OVER 50' TO 72'	42"	16'-6"	18-#8 (16'-0")	23-#4	8.64"

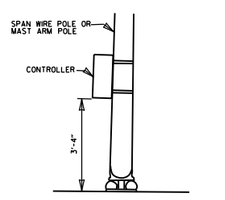

SPAN WIRE SUPPORT POLE AND MAST ARM POLE MOUNTED

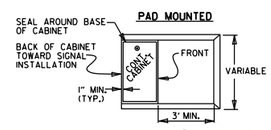

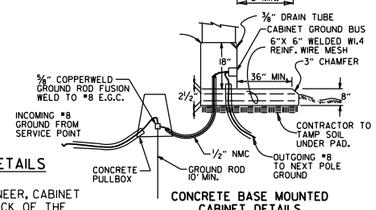

CONCRETE BASE MOUNTED CABINET DETAILS

CONTROLLER CABINET MOUNTING DETAILS

NOTE:
UNLESS OTHERWISE DIRECTED BY THE ENGINEER, CABINET ORIENTATION SHALL BE SUCH THAT THE BACK OF THE CABINET IS PARALLEL TO THE STREET AND POSITIONED TO ALLOW VISIBILITY OF THE SIGNAL DISPLAY WHILE OBSERVING THE CONTROLLER FRONT PANEL.

8. GROUND ROD - A 10' X 5/8" GROUND ROD SHALL BE INSTALLED IN THE CONCRETE PULL BOX FOR EACH POLE AND THE CONTROLLER. PAYMENT FOR THE GROUND ROD AND 1/2" NMC SHALL BE INCLUDED IN ITEM 714 FOR SIGNAL POLES AND ITEM 701 FOR THE CONTROLLER. THE CONCRETE PULL BOX AND CONDUCTOR BOX SHALL BE PAID SEPERATELY.

9. POLE BASE/FOUNDATION - ANCHOR BOLTS SHALL INCLUDE AS A MINIMUM, ONE LEVELING NUT, TWO FLAT WASHERS, ONE LOCK WASHER, AND ONE HEX NUT. PERIMETER OF ANCHOR BASE SHALL BE GROUTED WITH A 1/4" WEEP HOLE. ALL CONCRETE SHALL BE CLASS "S" OR GREATER.

10. CONCRETE - ALL CONCRETE FOR CONTROLLER CABINET AND POLE FOUNDATIONS SHALL BE CLASS "S" OR GREATER.

11. PEDESTRIAN PHASES - PEDESTRIAN MOVEMENTS SHALL BE PUSH BUTTON ACTUATED AND CONCURRENTLY TIMED, UNLESS OTHERWISE INDICATED ON THE PLAN SHEET(S). FURNISHING AND INSTALLING PEDESTRIAN PUSH SWITCH SHALL BE CONSIDERED SUBSIDIARY TO THE ITEM 707 PEDESTRIAN SIGNAL HEAD.

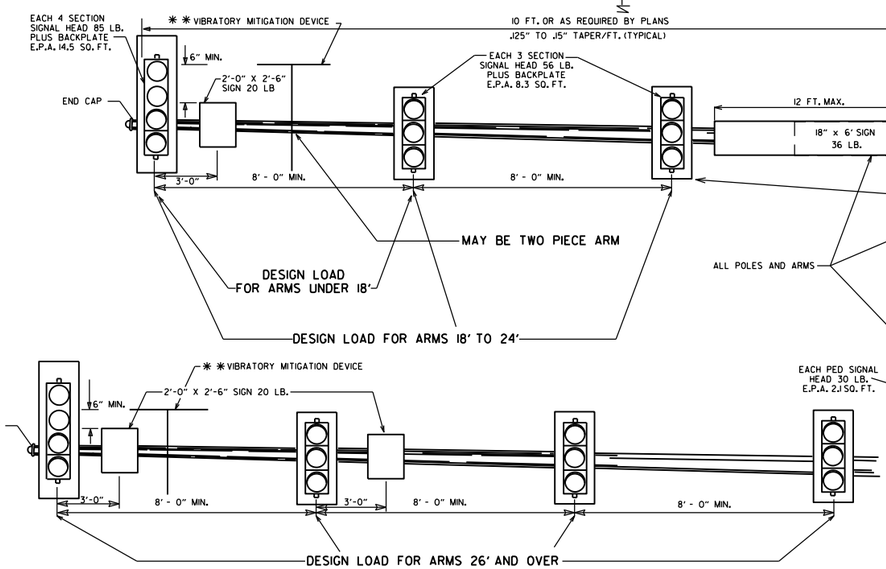

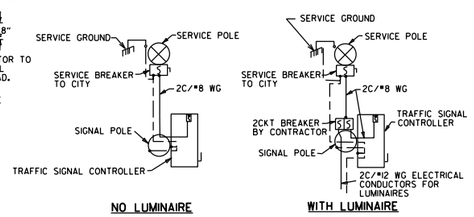

NO LUMINAIRE

WITH LUMINAIRE

SERVICE DISCONNECT
NOTE: ELECTRICAL GROUND CONDUCTOR IS BONDED TO ALL METAL ENCLOSURES

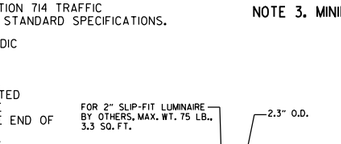

R10-10 SPECIAL R10-3e (SEE MUTCD)

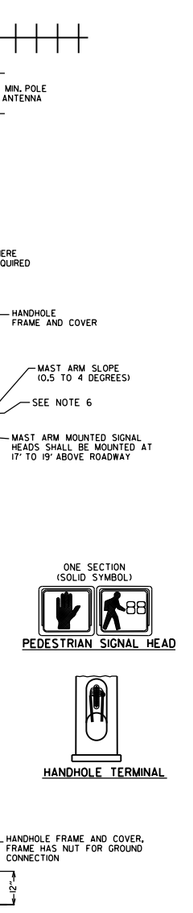

DATE	REVISION	FILMED
11-16-17	REVISED NOTES, ADDED PEDESTRIAN SIGNAL HEAD DETAIL, ADDED HANDHOLE TERMINAL DETAIL, ADDED TRENCHING DETAIL	
02-27-14	REVISED NOTES.	
09-12-13	ISSUED AS STANDARD DRAWING	
12-08-16	REVISED NOTES	
02-27-14	REVISED NOTES	
09-12-13	ISSUED AS STANDARD DRAWING	
07-21-11	REVISED VMD, SIGNAL HEADS	
05-21-09	REVISED GROUNDING	
07-31-08	REVISED GROUNDING	
04-25-08	ADDED VIBRATORY MITIGATION DEVICE & NOTES	
04-18-08	REVISED AASHTO NOTES	
04-17-08	REVISED TO 2001 AASHTO STANDARDS	
10-12-04	REVISED CABINET ORIENTATION	
06-23-04	REVISED	
05-11-04	REV. NOTE 3/AASHTO REQUIREMENTS	
06-11-01	REV. NOTES & POLE MAST ARM SLOPE	
04-11-01	REVISED POLE TAPERS	
04-25-00	REV. NOTES & SIGNAL HEAD PLACEMENT	
11-22-99	REVISED FOUNDATION DETAILS	
11-17-98	REVISED DETAILS AND NOTES	
11-21-95	ISSUED	

ARKANSAS STATE HIGHWAY COMMISSION

STEEL POLE WITH MAST ARM

STANDARD DRAWING SD-11

SUPERELEVATION TABLE FOR TWO - WAY TRAFFIC (4% MAXIMUM)

DEGREE OF CURVE	30 MPH e	30 MPH Ls (FT) MINIMUM	30 MPH Ls (FT) DESIRABLE
0° 15'	NC		
0° 30'			
0° 45'			
1° 00'			
1° 15'			
1° 30'			
1° 45'			
2° 00'			
2° 15'	RC	72	100
2° 30'			
2° 45'			
3° 00'			
3° 15'	0.022	75	
3° 30'			
3° 45'	0.024	79	
4° 00'			
4° 15'			
4° 30'			
4° 45'	0.026	83	
5° 00'			
5° 30'			
6° 00'	0.028	86	125
6° 30'			
7° 00'			
7° 30'	0.030	90	
8° 00'			
8° 30'	0.032	93	
9° 00'			
9° 30'			
10° 00'	0.034	97	
10° 30'			
11° 00'			
11° 30'			
12° 00'	0.036	100	
12° 30'			
13° 00'			
13° 30'			
14° 00'	0.038	104	
14° 30'			
15° 00'			
15° 30'			
16° 00'			
16° 30'	0.040	108	150

D MAX = 22° 45'

DEGREE OF CURVE	35 MPH e	35 MPH Ls (FT) MINIMUM	35 MPH Ls (FT) DESIRABLE
0° 15'	NC		
0° 30'			
0° 45'			
1° 00'			
1° 15'			
1° 30'			
1° 45'	RC	78	100
2° 00'			
2° 15'			
2° 30'	0.022	82	
2° 45'	0.024	86	125
3° 00'			
3° 15'			
3° 30'	0.026	90	
3° 45'			
4° 00'			
4° 15'	0.028	94	
4° 30'			
4° 45'			
5° 00'	0.030	98	
5° 30'			
6° 00'	0.032	101	
6° 30'			
7° 00'	0.034	105	150
7° 30'			
8° 00'			
8° 30'	0.036	109	
9° 00'			
9° 30'	0.038	113	
10° 00'			
10° 30'			
11° 00'			
11° 30'	0.040	117	

D MAX = 15° 15'

DEGREE OF CURVE	40 MPH e	40 MPH Ls (FT) MINIMUM	40 MPH Ls (FT) DESIRABLE
0° 15'	NC		
0° 30'			
0° 45'			
1° 00'			
1° 15'	RC	84	100
1° 30'			
1° 45'			
2° 00'	0.022	88	
2° 15'	0.024	92	125
2° 30'	0.026	97	
2° 45'			
3° 00'	0.028	101	
3° 15'			
3° 30'			
3° 45'	0.030	105	
4° 00'			
4° 15'	0.032	109	150
4° 30'			
4° 45'			
5° 00'	0.034	113	
5° 30'			
6° 00'	0.036	118	
6° 30'			
7° 00'	0.038	122	
7° 30'			
8° 00'	0.040	126	

D MAX = 10° 30'

DEGREE OF CURVE	45 MPH e	45 MPH Ls (FT) MINIMUM	45 MPH Ls (FT) DESIRABLE
0° 15'	NC		
0° 30'			
0° 45'			
1° 00'	RC	90	125
1° 15'			
1° 30'	0.022	95	
1° 45'	0.024	99	
2° 00'	0.026	104	
2° 15'			
2° 30'	0.028	108	150
2° 45'	0.030	113	
3° 00'			
3° 15'	0.032	117	
3° 30'			
3° 45'	0.034	122	
4° 00'			
4° 15'			
4° 30'	0.036	126	
4° 45'			
5° 00'	0.038	131	
5° 30'			
6° 00'	0.040	135	

D MAX = 8° 00'

ABBREVIATIONS

NC - NORMAL CROWN
RC - REVERSE CROWN, SUPERELEVATION AT NORMAL CROWN SLOPE
e - RATE OF SUPERELEVATION (FT. PER FT.)
Ls - LENGTH OF SUPERELEVATION TRANSITION (FT.)
L - DISTANCE FROM BEGINNING OF SUPERELEVATION TRANSITION TO ANY POINT (FT.)
d - WIDTH OF PAVEMENT (FT.) OR WIDTH OF SUBGRADE (FT.)
C - NORMAL CROWN (FT.)

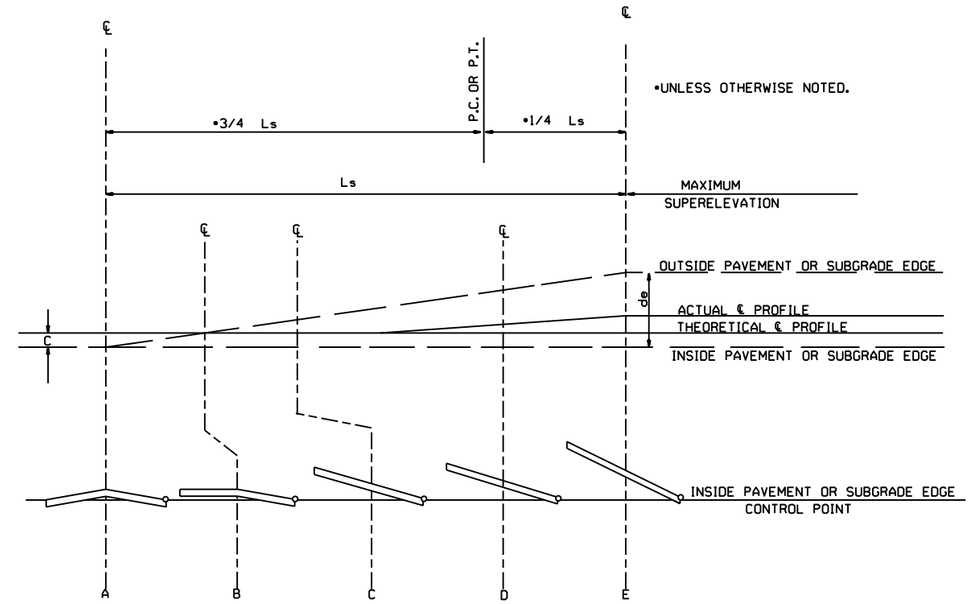

STANDARD METHOD WHEN SUPERELEVATION REVOLVES AROUND INNER SUBGRADE POINT OR INNER PAVEMENT EDGE

NOTE: MAINTAIN NORMAL CROWN ON INSIDE UNTIL SUPERELEVATION EXCEEDS 2C.

SUPERELEVATION FORMULA $= \frac{Lde}{Ls}$

GENERAL NOTES

1. ON PAVEMENT WITH TWO-WAY TRAFFIC, THE SUPERELEVATION SHALL BE REVOLVED ON THE INSIDE PAVEMENT EDGE UNLESS OTHERWISE NOTED ON THE PLANS
2. SUPERELEVATION VALUES SHOWN ON THE CROSS SECTIONS ARE VALUES (+) OR (-) TO BE ADDED TO OR SUBTRACTED FROM THE POINT OF CONTROL.
3. LENGTHS FOR L MAY BE ROUNDED IN MULTIPLES OF 25 FT. OR 50 FT. TO PERMIT SIMPLER CALCULATIONS.
4. PAVEMENTS WIDER THAN 2 LANES SHALL HAVE ADDITIONAL TRANSITION LENGTHS AS FOLLOWS:

3 LANE UNDIVIDED - - - - - +20%
4 LANE UNDIVIDED - - - - - +50%
5 LANE UNDIVIDED - - - - - +80%
6 LANE UNDIVIDED - - - - - +100%

NOTE: MAINTAIN NORMAL CROWN ON INSIDE UNTIL SUPERELEVATION EXCEEDS 2C.

RATE OF SUPERELEVATION SHALL BE COMPUTED ON STRAIGHT LINE METHOD USING APPLICABLE Ls.

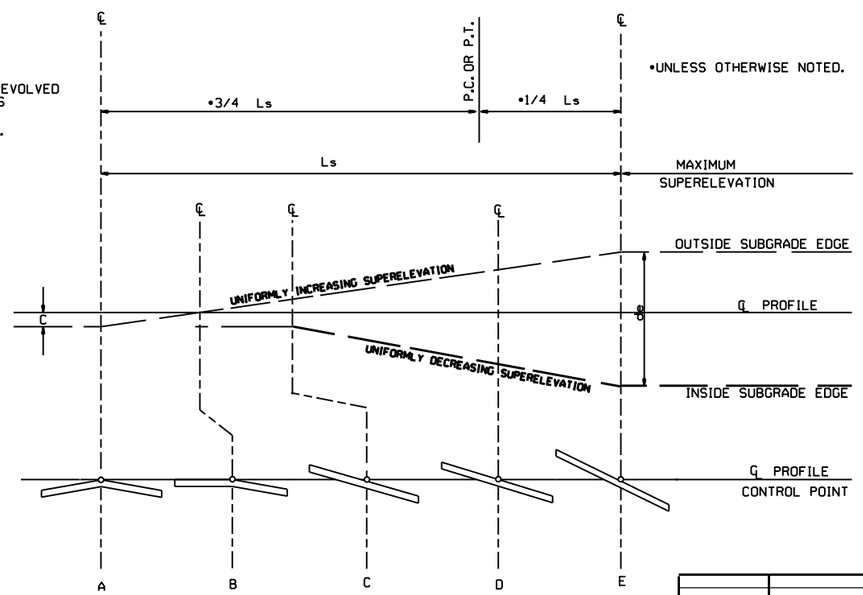

STANDARD METHOD WHEN SUPERELEVATION REVOLVES AROUND CENTER LINE

DATE	REVISION	DATE FILMED
11-07-19	ISSUED	

ARKANSAS STATE HIGHWAY COMMISSION

TABLES AND METHOD OF SUPERELEVATION FOR TWO-WAY TRAFFIC (4% MAXIMUM)

STANDARD DRAWING SE-3

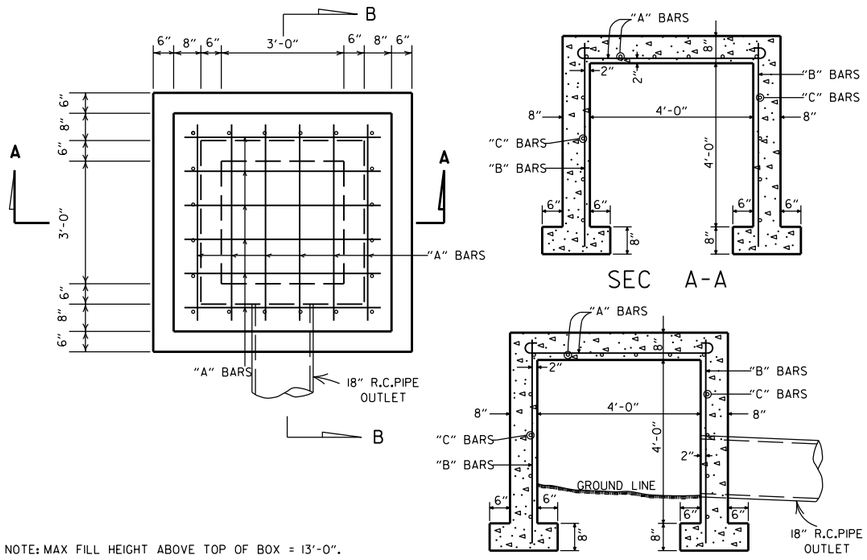

NOTE: MAX FILL HEIGHT ABOVE TOP OF BOX = 13'-0".

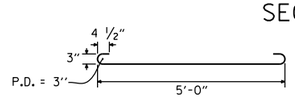

STEEL SCHEDULE

BARS	NUMBER	LENGTH	SPACING
"A"	12	6'-0"	10"
"B"	20	5'-0"	10 1/2"
"C"	16	5'-0"	12"

ALL STEEL TO BE #4 BARS

QUANTITIES

CONCRETE 3.31 CU. YDS.
REINFORCING STEEL 168 LB.

GENERAL NOTE:

THE PAY ITEMS FOR REINFORCED CONCRETE SPRING BOXES SHALL BE FOR THE QUANTITIES OF CONCRETE OF THE CLASS SPECIFIED, REINFORCING STEEL, EXCAVATION FOR STRUCTURES AND 18" R.C. PIPE CULVERT.

REINFORCED CONCRETE SPRING BOX

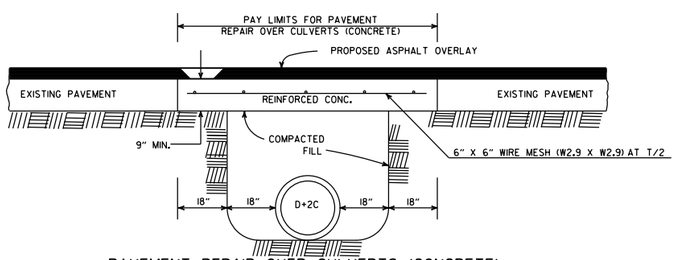

PAVEMENT REPAIR OVER CULVERTS (CONCRETE)

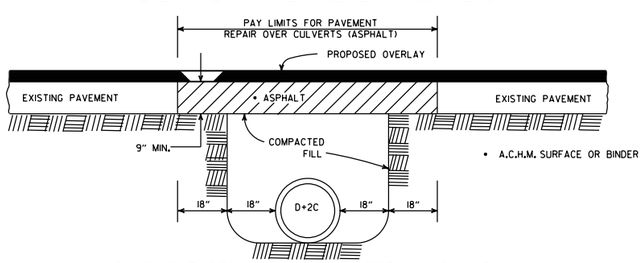

PAVEMENT REPAIR OVER CULVERTS (ASPHALT)

DETAIL SHOWING REPAIR OF EXISTING PAVEMENT AT CULVERT INSTALLATIONS

* A 2" MIN. HIGH CURB IS REQUIRED WHEN CONCRETE WALK IS ADJACENT TO THE HAND RAILING. PAYMENT FOR CURB SHALL BE CONSIDERED INCLUDED IN THE PRICE BID FOR CONCRETE WALKS.

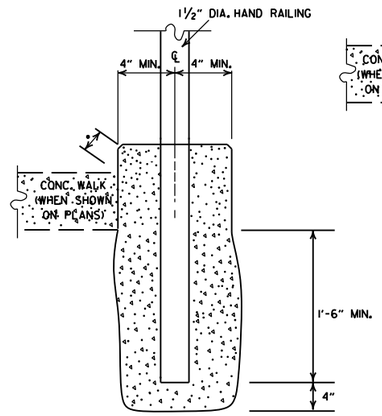

DETAIL OF HAND RAILING SET IN CONCRETE

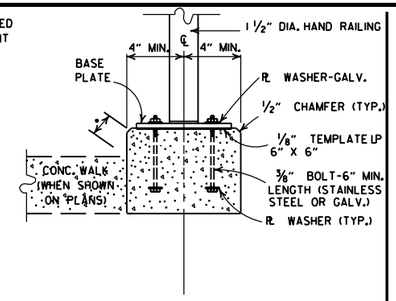

POST CONNECTION TO WALL

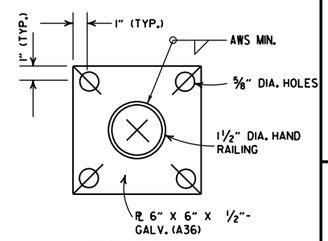

BASE PLATE

POST CONNECTION DETAILS

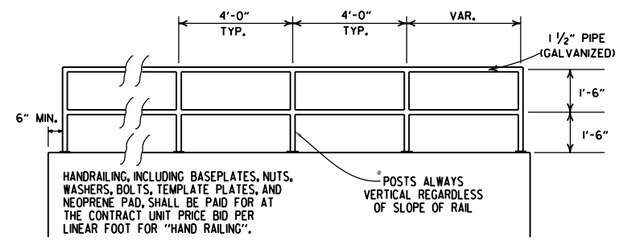

HAND RAILING SHALL CONFORM TO SECTION 633.

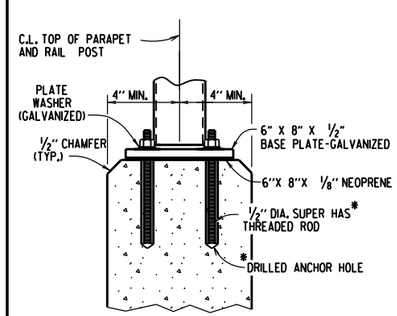

*HILTI HIT RE 500 EPOXY ADHESIVE ANCHOR SYSTEM WITH 4 1/2" EMBEDMENT OR APPROVED EQUAL.

THE ADHESIVE ANCHOR SYSTEM SHALL BE INSTALLED IN ACCORDANCE WITH MANUFACTURER'S RECOMMENDATIONS.

POST CONNECTION TO WALL

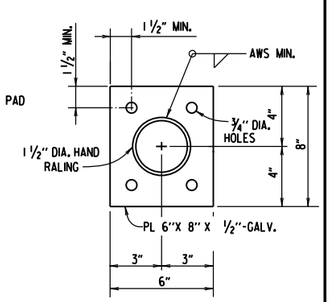

BASE PLATE

DETAILS OF ALTERNATE POST ANCHOR SYSTEM
(EPOXY ADHESIVE ANCHORS)

HAND RAILING DETAILS

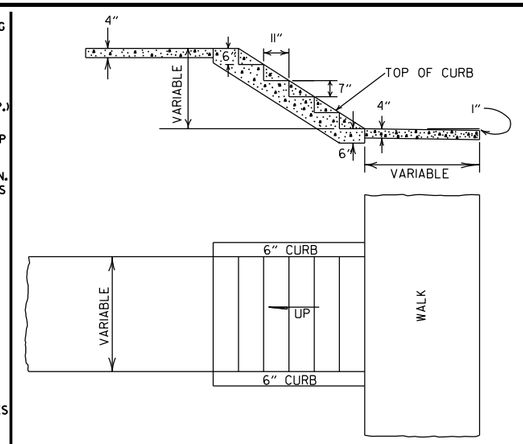

GENERAL NOTES

1. RISE AND TREAD DIMENSIONS OF STEPS MAY BE VARIED AS DIRECTED BY THE ENGINEER, HOWEVER, TREAD WIDTHS SHALL BE 11" MIN. ALL STEPS IN A FLIGHT SHALL HAVE CONSISTENT TREAD & RISER DIMENSIONS.
2. 1" TRANSVERSE EXPANSION JOINTS SHALL BE PLACED IN CONCRETE WALKS AT 45' INTERVALS.

DETAILS OF CONCRETE STEPS & WALKS

DATE	REVISION	DATE FILMED
10-25-18	REVISED DETAIL SHOWING REPAIR OF EXISTING PAVEMENT AT CULVERT INSTALLATIONS	
9-12-13	REVISED REINFORCED CONCRETE SPRING BOX	
7-26-12	REMOVED RETAINING WALL DETAILS & REVISED HAND RAILING DETAILS	
4-17-08	REV. JOINT & FOOTING STEP DETAILS	
11-29-07	REVISED RETAINING WALL DRAINAGE	
5-25-06	REVISED PVMT REPAIR OVER CULVERTS (CONC); REVISED REINFORCED CONC SPRING BOX	
10-9-03	REVISED PIPE RAILING DETAILS TO HAND RAILING DETAILS	
4-10-03	REVISED RETAINING WALL DRAWING	
8-22-02	ADDED HAND RAILING DETAIL	
11-16-01	REVISED PVMT REPAIR OVER CULVERTS (CONC); CORRECTED SPELLING IN GENERAL NOTES	
11-18-98	ADDED GENERAL NOTES TO CONCRETE STEPS & WALKS	
7-02-98	ENLARGED PIPE	
4-03-97	ADDED NOTE TO STEEL BAR SCHED.	
10-18-96	CORRECTED SPELLING	
4-26-96	ADD WEEP HOLE;REV. JOINT SPACING IN RET. WALL	
6-2-94	CHANGED CONST. TO CONTRACTION JOINT	
10-1-92	CHANGED MESH FABRIC TO WIRE MESH	10-1-92
8-15-91	DELETED HDWL MODIFICATION DETAIL	8-15-91
11-8-90	DELETED COLD MIX FROM CULV'T. REPAIR	11-8-90
11-30-89	REV. RETAINING WALL STEEL SCHEDULE	11-30-89
11-17-88	V. BARS BEHIND ARROW	665-11-17-88
7-15-88	REV. PAVEMENT REPAIR ADDED HDWL. MODS, DEL. PIPE UNDERDRAINS	649-7-15-88
11-1-84	REV. TRENCH FOR PIPE UNDERDRAIN	510-11-1-84
1-4-83	ELIMINATED CONC. CLASS & ADDED CHAMFER NOTE	682-1-4-83
3-2-81	SPELLING OF "UNDERDRAIN"	721-3-2-81
4-20-79	REV. UNDERDRAIN DET& PAVEMENT REPAIR	674-4-20-79
2-2-76	12"MIN. GRAN. MAT'L. OVER PIPE	919-2-2-76
4-10-75	REM. SPECS. FOR GRAN. MAT'L.	568-4-10-75-853
5-22-74	GRANULAR MAT'L. TO BE SB-3	567-5-22-74-740
10-2-72	REVISED AND REDRAWN	564-10-16-72

ARKANSAS STATE HIGHWAY COMMISSION

DETAILS OF SPECIAL ITEMS

STANDARD DRAWING SI - 1

R1-1

STANDARD 30"X30"
EXPRESSWAY 36"X36"
SPECIAL 48"X48"

R1-2

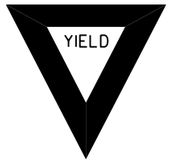

STD. 36"X36"X36"
EXPWY. 48"X48"X48"
FWY. 60"X60"X60"

R2-1

STD. 24"X30"
EXPWY. 36"X48"
FWY. 48"X60"

W3-5

STD. 36"X36"
EXPWY. 48"X48"
FWY. 48"X48"

W3-5a

STD. 36"X36"
EXPWY. 48"X48"
FWY. 48"X48"

R4-1

STD. 24"X30"
EXPWY. 36"X48"
FWY. 48"X60"

R4-2

STD. 24"X30"
EXPWY. 36"X48"
FWY. 48"X60"

R5-1

STD. 30"X30"
EXPWY. 36"X36"
SPECIAL 48"X48"

R11-2

48"X30"

R11-3A

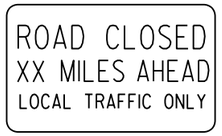

60"X30"

R11-4

60"X30"

W21-5a

STD. 36"X36"
FWY. 48"X48"

W1-1

STD. 36"X36"
FWY. 48"X48"

W1-2

STD. 36"X36"
FWY. 48"X48"

W1-3

STD. 48"X48"

W1-4

STD. 48"X48"

W1-6

STD. 48"X24"
SPECIAL 60"X30"

W1-8

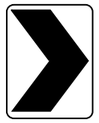

STD. 18"X24"
SPECIAL 24"X30"
EXPWY. 30"X36"
FWY. 36"X48"

W3-1

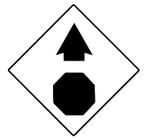

STD. 36"X36"
SPECIAL 48"X48"

W3-2

STD. 36"X36"
SPECIAL 48"X48"

W4-2

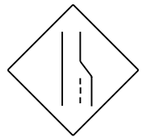

STD. 36"X36"
FWY. 48"X48"

W5-1

STD. 36"X36"
SPECIAL 48"X48"

W6-3

EXPWY. 36"X36"
SPECIAL 48"X48"

W8-7

EXPWY. 36"X36"
FWY. 48"X48"

W9-2

STD. 36"X36"
FWY. 48"X48"

W13-1

STD. 24"X24"

W20-1

STD. 48"X48"

W20-2

STD. 48"X48"

W20-3

STD. 48"X48"

W20-4

STD. 48"X48"

W20-5

STD. 48"X48"

W20-7a

STD. 36"X36"
FWY. 48"X48"

W21-2

STD. 30"X30"
SPECIAL 36"X36"

W21-5

STD. 30"X30"
SPECIAL 36"X36"

W24-1

STD. 36"X36"

W1-4b

STD. 48"X48"

R56-1

STD. 18"X18"

W8-11

STD. 36"X36"
FWY. 48"X48"

W8-9

STD. 36"X36"
FWY. 48"X48"

G20-1

60"X24"

G20-2

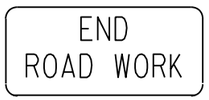

48"X24"

OM-3L OM-3R

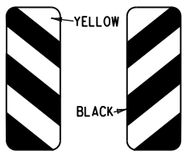

12"X36"

M4-9

STD. 30"X24"
SPECIAL 48"X36"
SPECIAL 60"X48"

M4-10

48"X18"

R55-1

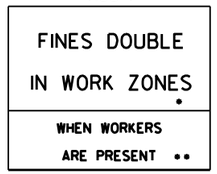

36"X60"

• USE 6" C LETTERS
•• USE 4" D LETTERS

ADVANCE DISTANCES
(XXXX)

500 FT	½ MILE
1000 FT	¾ MILE
1500 FT	1 MILE AHEAD

GENERAL NOTES:

1. ALL TRAFFIC CONTROL DEVICES USED ON ROAD CONSTRUCTION SHALL CONFORM TO THE MANUAL ON UNIFORM TRAFFIC CONTROL DEVICES, LATEST EDITION, AND TO THE STANDARD HIGHWAY SIGNS, LATEST EDITION, OR AS APPROVED BY THE FEDERAL HIGHWAY ADMINISTRATION.

2. TRAFFIC CONTROL DEVICES SHALL BE SET UP JUST BEFORE THE START OF CONSTRUCTION OPERATIONS AND SHALL BE PROPERLY MAINTAINED DURING THE TIME SUCH CONDITIONS EXIST. THEY SHALL REMAIN IN PLACE ONLY AS LONG AS NEEDED AND REMOVED THEREAFTER.

3. EXISTING SIGNS AND CONSTRUCTION SIGNS SHALL BE KEPT IN PROPER POSITION, AND BE CLEAN AND LEGIBLE AT ALL TIMES. SIGNS THAT DO NOT APPLY TO EXISTING CONDITIONS SHALL BE REMOVED. SIGNS THAT ARE DAMAGED, DEFACED, OR THAT ACCUMULATE DIRT DURING CONSTRUCTION SHALL BE CLEANED, REPAIRED, OR REPLACED.

• 4. SIGNS ARE USUALLY MOUNTED ON A SINGLE POST, ALTHOUGH THOSE WIDER THAN 36" OR LARGER THAN 10 SQ. FT. SHALL BE MOUNTED ON TWO POSTS OR ABOVE A TYPE III BARRICADE.

• 5. SIGN POSTS DIRECT BURIED IN SOIL SHALL BE 2 LB. MINIMUM CHANNEL POST OR 4"x4" WOOD POSTS. CHANNEL POSTS SHALL BE PAINTED GREEN. WOOD POSTS SHALL BE PAINTED WHITE. ALL POSTS SHALL BE NEATLY CONSTRUCTED, AND SHALL BE REPLUMBED, CLEANED, OR REPAIRED AS NEEDED FOR THE DURATION OF THE JOB. THERE SHALL NOT BE MORE THAN 2 POSTS IN A 7' PATH FOR WOOD OR CHANNEL POSTS. ANY CHANNEL POST SPLICE SHALL BE IN ACCORDANCE WITH STANDARD DRAWING TC-3.

6. POST MOUNTED SIGNS IN RURAL AREAS SHALL BE CONSTRUCTED WITH THE NEAR EDGE OF THE SIGN FROM 6 TO 12 FEET FROM THE PAVEMENT EDGE. SIGNS IN URBAN AREAS AND BARRICADE MOUNTED SIGNS SHALL BE MOUNTED A MINIMUM OF 2 FEET FROM THE PAVEMENT EDGE.

7. ALL POST AND BARRICADE MOUNTED SIGNS MOUNTED IN URBAN AREAS SHALL BE MOUNTED A MINIMUM DISTANCE OF 7' FROM THE BOTTOM OF THE SIGN TO THE ROADWAY SURFACE. ALL POST AND BARRICADE MOUNTED SIGNS MOUNTED IN RURAL AREAS SHALL BE MOUNTED A MINIMUM DISTANCE OF 7' FROM THE BOTTOM OF THE SIGN TO THE ROADWAY SURFACE, EXCEPT A MINIMUM OF 6' SHALL BE USED WHEN MOUNTING AN ADVISORY SIGN BELOW A WARNING SIGN. TEMPORARY SIGNS MAY BE MOUNTED ON PORTABLE SUPPORTS FOR INTERMEDIATE TERM STATIONARY WORK CONDITIONS. THE SIGNS MINIMUM MOUNTING HEIGHT SHALL BE 5'. RETROREFLECTIVE DEVICES SHALL BE USED. TEMPORARY SIGNS MAY BE MOUNTED ON PORTABLE SUPPORTS FOR SHORT-TERM, SHORT DURATION, AND MOBILE CONDITIONS. THEY SHALL BE NO LESS THAN ONE (1) FOOT ABOVE THE TRAVELED WAY. LONG-TERM STATIONARY SIGNS SHALL BE DIRECT BURIED IN SOIL, UNLESS CONDITIONS NECESSITATE THE USE OF PORTABLE SIGNS, OR AS APPROVED BY THE ENGINEER. CONCRETE PADS, CONCRETE OR ROCK BALLAST, OR OTHER SOLID MATERIALS SHALL NOT BE UTILIZED WITH PORTABLE SIGN SUPPORTS.

8. FLAGGERS SHALL USE REFLECTORIZED STOP-SLOW PADDLES. FLAGS MAY BE USED ONLY FOR EMERGENCY SITUATIONS.

9. MOST OF THE SIGNS SHOWN ARE ORIENTED TO THE RIGHT. HOWEVER, THIS DOES NOT PRECLUDE THE USE OF MIRROR IMAGES OF THESE SIGNS WHERE THE REVERSE ORIENTATION MIGHT BETTER CONVEY TO MOTORISTS THE PROPER DIRECTION OF MOVEMENT.

10. R55-1 SIGNS SHALL BE PLACED AT LEAST 1500' BUT NOT MORE THAN 1 MILE IN ADVANCE OF THE WORK ZONE. IF A SPEED LIMIT REDUCTION IS IN EFFECT, THE SIGN SHALL BE PLACED A MINIMUM OF 500' IN ADVANCE OF THE "REDUCED SPEED AHEAD" SIGN.

• NOTE: SUPPORTS FOR SIGNS, BARRICADES, AND VERTICAL PANELS THAT ARE DIFFERENT FROM THE REQUIREMENTS SHOWN IN NOTES 4 & 5, BUT MEET THE REQUIREMENTS OF MANUAL FOR ASSESSING SAFETY HARDWARE (MASH), WILL BE ACCEPTED. COMPLIANCE WITH THE REQUIREMENTS OF MANUAL FOR ASSESSING SAFETY HARDWARE (MASH) IS REQUIRED FOR ALL PROJECTS.

DATE	REVISION	FILMED
11-07-19	REVISED FOR MASH	
4-13-17	DELETED RSP-1 & ADDED W21-5a	
9-2-15	REVISED REDUCED SPEED LIMIT AHEAD SIGNS REVISED ROAD WORK NEXT XX MILES	
12-15-11	REVISED W24-1	
11-17-10	DELETED W8-9a & ADDED W8-9	
10-15-09	ADDED REFERENCE TO MASH & ADDED SIGN W24-1	
4-17-08	REVISED SIGN DESIGNATIONS	
11-18-04	REVISED NOTES	
10-9-03	REVISED NOTE 1	
11-16-01	REVISED NOTE 7	
9-28-00	REVISED NOTE	
11-18-98	ADDED NOTE	
6-26-97	REVISED NOTE 5	
4-03-97	REVISED NOTE 5	
10-18-96	ADDED CONTROLLED ACCESS HWY. SIGN & TO NOTE 7	
10-12-95	ADDED R55-1	
6-8-95	REVISED TO CORRECT SIGN ILLUSTRATIONS	6-8-95
2-2-95	REVISED PER PART VI, MUTCD SEPT. 3, 1993	
8-15-91	DRAWN AND PLACED IN USE	

ARKANSAS STATE HIGHWAY COMMISSION

STANDARD TRAFFIC CONTROLS FOR HIGHWAY CONSTRUCTION

STANDARD DRAWING TC-1

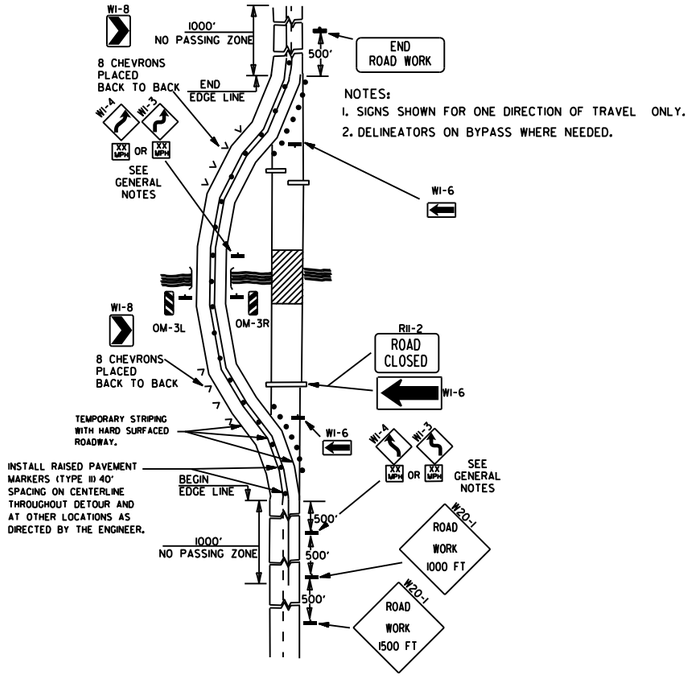

NOTES:
1. SIGNS SHOWN FOR ONE DIRECTION OF TRAVEL ONLY.
2. DELINEATORS ON BYPASS WHERE NEEDED.

(A) TYPICAL APPLICATION OF TRAFFIC CONTROL DEVICES ON A 2-LANE HIGHWAY WHERE THE ENTIRE ROADWAY IS CLOSED AND A BYPASS DETOUR IS PROVIDED.

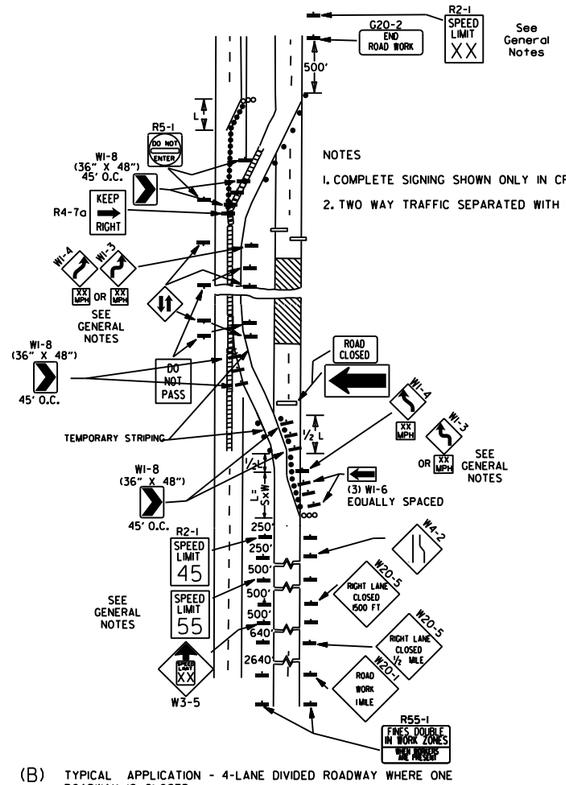

NOTES
1. COMPLETE SIGNING SHOWN ONLY IN CROSSOVER DIRECTION.
2. TWO WAY TRAFFIC SEPARATED WITH POSITIVE BARRIER.

(B) TYPICAL APPLICATION - 4-LANE DIVIDED ROADWAY WHERE ONE ROADWAY IS CLOSED.

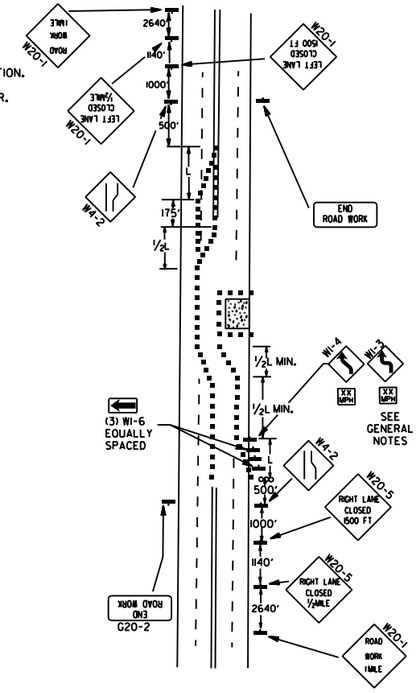

(C) TYPICAL APPLICATION - 4-LANE UNDIVIDED ROADWAY WHERE HALF OF THE ROADWAY IS CLOSED.

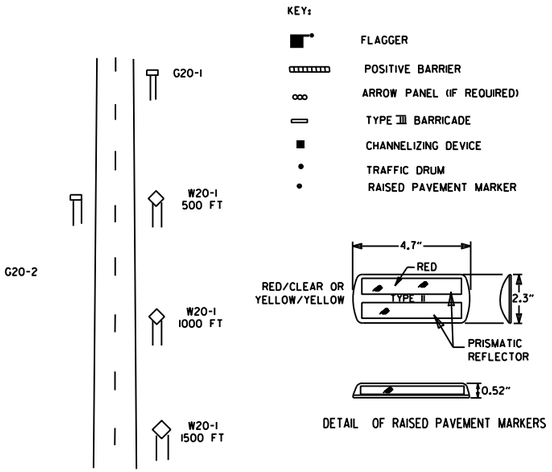

TYPICAL ADVANCE WARNING SIGN PLACEMENT

TAPER FORMULAE:

$L = SXW$ FOR SPEEDS OF 45MPH OR MORE.

$L = \frac{WS^2}{60}$ FOR SPEEDS OF 40MPH OR LESS.

WHERE:

L= MINIMUM LENGTH OF TAPER.

S= NUMERICAL VALUE OF POSTED SPEED LIMIT PRIOR TO WORK OR 85TH PERCENTILE SPEED.

W= WIDTH OF OFFSET.

GENERAL NOTES:

1. THE MAINTENANCE DIVISION SHALL CONDUCT A BALL BANK STUDY TO DETERMINE THE ADVISORY SPEED LIMIT PRIOR TO OPENING TO TRAFFIC. THE ADVISORY SPEED WILL BE POSTED ON W1-3 OR W1-4 CURVE WARNING SIGNS. USE W1-4 WHEN SPEED IS GREATER THAN 30MPH AND W1-3 WHEN 30MPH OR LESS
2. WHEN THE EXISTING SPEED LIMIT IS 55MPH AND THE PLANS REQUIRE A SPEED LIMIT OF 45MPH, THE R2-1(55) SHALL BE OMITTED AND THE W3-5 SHALL BE INSTALLED AT THAT LOCATION. ADDITIONAL R2-1 45MPH SPEED LIMIT SIGNS SHALL BE INSTALLED AT A MAXIMUM OF 1MILE INTERVALS. AT THE END OF THE WORK AREA A R2-1(XX) SHALL BE INSTALLED TO MATCH ORIGINAL SPEED LIMIT.
3. WHEN THE EXISTING SPEED LIMIT IS 65MPH AND THE PLANS REQUIRE A SPEED LIMIT OF 55MPH, THE R2-1(45) SHALL BE OMITTED. ADDITIONAL R2-1 55MPH SPEED LIMIT SIGNS SHALL BE INSTALLED AT A MAXIMUM OF 1MILE INTERVALS. AT THE END OF THE WORK AREA A R2-1(XX) SHALL BE INSTALLED TO MATCH ORIGINAL SPEED LIMIT.
4. THE MAXIMUM SPACING BETWEEN CHANNELIZING DEVICES IN A TAPER SHOULD BE APPROXIMATELY EQUAL IN FEET TO THE SPEED LIMIT. BEYOND THE TAPER, MAXIMUM SPACING SHALL BE TWO TIMES THE SPEED LIMIT, OR AS DIRECTED BY THE ENGINEER.
5. WARNING LIGHTS AND/OR FLAGS MAY BE MOUNTED TO SIGNS OR CHANNELIZING DEVICES AT NIGHT AS NEEDED.
6. PAVEMENT MARKINGS NO LONGER APPLICABLE WHICH MIGHT CREATE CONFUSION IN THE MINDS OF VEHICLE OPERATORS SHALL BE REMOVED OR OBLITERATED AS SOON AS PRACTICABLE.
7. TRAILER MOUNTED DEVICES SUCH AS ARROW PANELS AND PORTABLE CHANGEABLE MESSAGE SIGNS SHALL BE DELINEATED BY AFFIXING CONSPICUITY MATERIAL IN A CONTINUOUS LINE ON THE FACE OF THE TRAILER. WHEN PLACED ON OR ADJACENT TO THE SHOULDER AND NOT BEHIND A POSITIVE BARRIER, THESE DEVICES SHALL BE DELINEATED BY PLACING FIVE (5) TRAFFIC DRUMS, EQUALLY SPACED ALONG THE TRAFFIC SIDE OF THE DEVICE. PAYMENT FOR TRAFFIC DRUMS SHALL BE CONSIDERED INCLUDED IN THE PRICE BID FOR VARIOUS TRAILER MOUNTED DEVICES.
8. DIMENSIONS SHOWN FOR RAISED PAVEMENT MARKERS ARE TYPICAL. THE CONTRACTOR MAY SUBSTITUTE SIMILAR MARKERS WITH THE APPROVAL OF THE ENGINEER. REQUESTING APPROVAL FOR SIMILAR MARKERS MAY BE MADE BY REFERRING TO THE ARDOT QUALIFIED PRODUCTS LIST.
9. ALL TRAILER MOUNTED DEVICES SUCH AS ARROW PANELS AND PORTABLE CHANGEABLE MESSAGE SIGNS SHALL MEET THE REQUIREMENTS OF THE MANUAL FOR ASSESSING SAFETY HARDWARE (MASH).

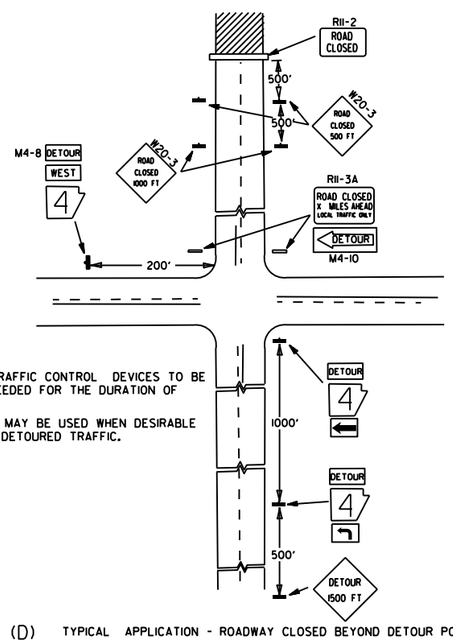

NOTES:
1. REGULATORY TRAFFIC CONTROL DEVICES TO BE MODIFIED AS NEEDED FOR THE DURATION OF THE DETOUR.
2. STREET NAMES MAY BE USED WHEN DESIRABLE FOR DIRECTING DETOURED TRAFFIC.

(D) TYPICAL APPLICATION - ROADWAY CLOSED BEYOND DETOUR POINT.

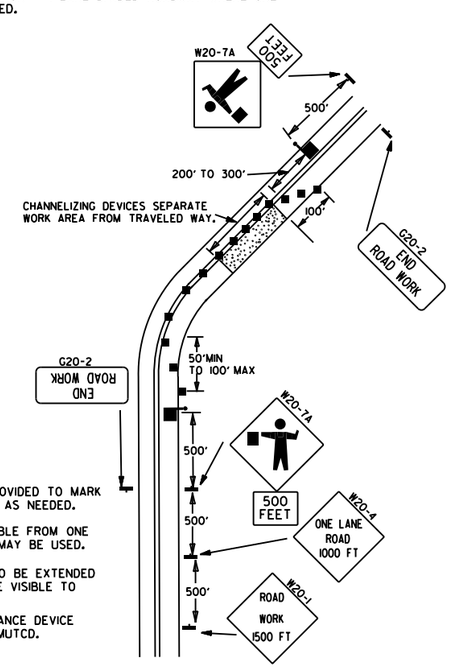

NOTES:
1. FLOOD LIGHTS SHOULD BE PROVIDED TO MARK FLAGGER STATIONS AT NIGHT AS NEEDED.
2. IF ENTIRE WORK AREA IS VISIBLE FROM ONE STATION, A SINGLE FLAGGER MAY BE USED.
3. CHANNELIZING DEVICES ARE TO BE EXTENDED TO A POINT WHERE THEY ARE VISIBLE TO APPROACHING TRAFFIC.
4. AUTOMATED FLAGGER ASSISTANCE DEVICE (AFAD) OPTIONAL. REFER TO MUTCD.

(E) TYPICAL APPLICATION OF TRAFFIC CONTROL DEVICES ON 2-LANE HIGHWAY WHERE ONE LANE IS CLOSED AND FLAGGING IS PROVIDED.

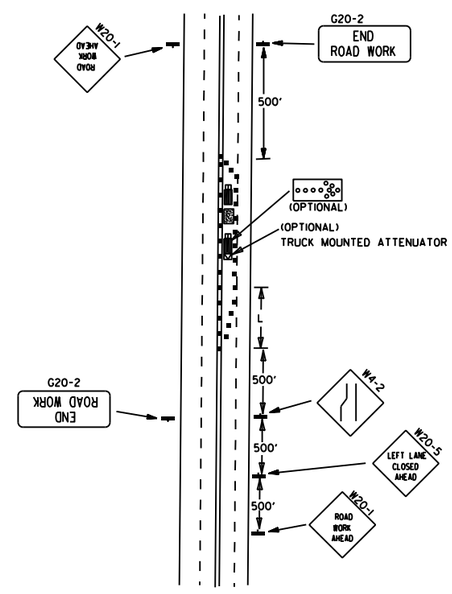

(F) TYPICAL APPLICATION - 4-LANE UNDIVIDED ROADWAY WITH INSIDE LANE CLOSED.

DATE	REVISION	FILMED
05-20-21	REVISED NOTE 7	
11-07-19	REVISED NOTE 1, ADDED NOTE 9	
9-2-15	REVISED NOTE 2, ADDED NOTE 8, REVISED DRAWING (A) & REPLACED R2-5A WITH W3-5	
9-12-13	REVISED DETAIL OF RAISED PAVEMENT MARKERS	
3-11-10	ADDED (AFAD)	
11-20-08	REVISED SIGN DESIGNATIONS	
11-18-04	ADDED GENERAL NOTE	
10-18-96	ADDED R55-1	
4-26-96	CORRECTED (c) BEHIND G20-2	
6-8-95	CORRECTED SIGN IDENT. ON W1-4A	6-8-95
2-2-95	REVISED PER PART VI, MUTCD, SEPT. 3, 1993	
8-15-91	DRAWN AND PLACED IN USE	

ARKANSAS STATE HIGHWAY COMMISSION

STANDARD TRAFFIC CONTROLS FOR HIGHWAY CONSTRUCTION

STANDARD DRAWING TC-2

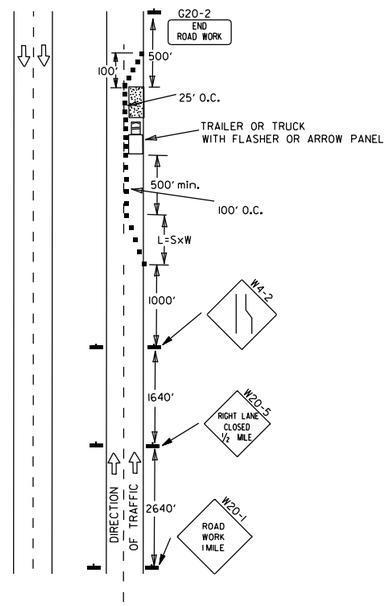

(A) TYPICAL APPLICATION - DAYTIME MAINTENANCE OPERATIONS OF SHORT DURATION ON A 4-LANE DIVIDED ROADWAY WHERE HALF OF THE ROADWAY IS CLOSED.

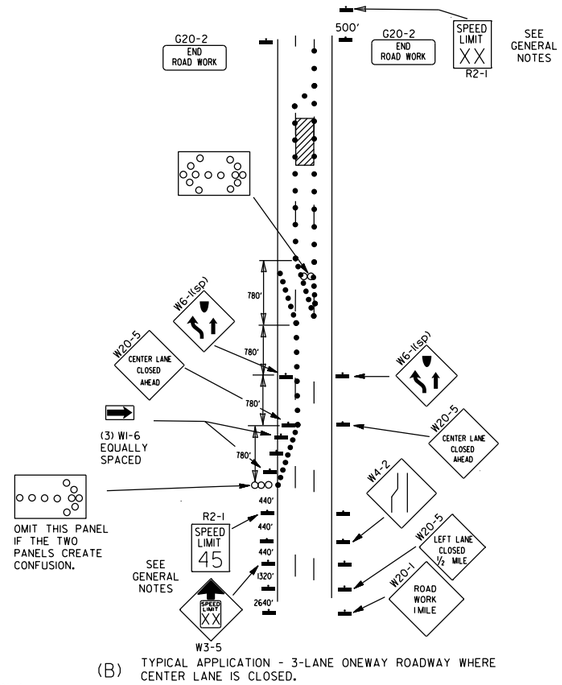

(B) TYPICAL APPLICATION - 3-LANE ONEWAY ROADWAY WHERE CENTER LANE IS CLOSED.

KEY:

- ARROW PANEL (IF REQUIRED)
- ■ CHANNELIZING DEVICE
- ● TRAFFIC DRUM

GENERAL NOTES:

1. A SPEED LIMIT REDUCTION MAY BE IMPLEMENTED ONLY WHEN DESIGNATED IN THE PLAN OR WHEN RECOMMENDED BY THE ROADWAY DESIGN DIVISION.
2. WHEN THE EXISTING SPEED LIMIT IS 55MPH AND THE PLANS REQUIRE A SPEED LIMIT OF 45MPH, THE R2-1(55) SHALL BE OMITTED AND THE W3-5 SHALL BE INSTALLED AT THAT LOCATION. ADDITIONAL R2-1 45MPH SPEED LIMIT SIGNS SHALL BE INSTALLED AT A MAXIMUM OF 1 MILE INTERVALS. AT THE END OF THE WORK AREA A R2-1(XX) SHALL BE INSTALLED TO MATCH ORIGINAL SPEED LIMIT.
3. WHEN THE EXISTING SPEED LIMIT IS 65MPH AND THE PLANS REQUIRE A SPEED LIMIT OF 55MPH, THE R2-1(45) SHALL BE OMITTED. ADDITIONAL R2-1 55MPH SPEED LIMIT SIGNS SHALL BE INSTALLED AT A MAXIMUM OF 1 MILE INTERVALS. AT THE END OF THE WORK AREA A R2-1(XX) SHALL BE INSTALLED TO MATCH ORIGINAL SPEED LIMIT.
4. THE MAXIMUM SPACING BETWEEN CHANNELIZING DEVICES IN A TAPER SHOULD BE APPROXIMATELY EQUAL IN FEET TO THE SPEED LIMIT. BEYOND THE TAPER, MAXIMUM SPACING SHALL BE TWO TIMES THE SPEED LIMIT OR AS DIRECTED BY THE ENGINEER.
5. WARNING LIGHTS AND/OR FLAGS MAY BE MOUNTED TO SIGNS OR CHANNELIZING DEVICES AT NIGHT AS NEEDED.
6. PAVEMENT MARKINGS NO LONGER APPLICABLE WHICH MIGHT CREATE CONFUSION IN THE MINDS OF VEHICLE OPERATORS SHALL BE REMOVED OR OBLITERATED AS SOON AS PRACTICABLE.
7. THE G20-1 SIGN WILL BE REQUIRED ON JOBS OF OVER TWO MILES IN LENGTH. WHEN THE LANE CLOSURE IS NOT AT THE BEGINNING OF THE PROJECT, THE G20-1 SIGN SHALL BE ERECTED 125' IN ADVANCE OF THE JOB LIMIT. ADDITIONAL W20-1 (1 MILE) SIGNS ARE NOT REQUIRED IN ADVANCE OF LANE CLOSURES THAT BEGIN INSIDE THE PROJECT LIMITS.
8. FLAGGERS SHALL USE STOP/SLOW PADDLES FOR CONTROLLING TRAFFIC THROUGH WORK ZONES. FLAGS MAY BE USED ONLY FOR EMERGENCY SITUATIONS.
9. ALL PLASTIC DRUMS AND CONES SHALL MEET THE REQUIREMENTS OF MANUAL FOR ASSESSING SAFETY HARDWARE (MASH).
10. TRAILER MOUNTED DEVICES SUCH AS ARROW PANELS AND PORTABLE CHANGEABLE MESSAGE SIGNS SHALL BE DELINEATED BY AFFIXING CONSPICUITY MATERIAL IN A CONTINUOUS LINE ON THE FACE OF THE TRAILER. WHEN PLACED ON OR ADJACENT TO THE SHOULDER AND NOT BEHIND A POSITIVE BARRIER, THESE DEVICES SHALL BE DELINEATED BY PLACING FIVE (5) TRAFFIC DRUMS, EQUALLY SPACED ALONG THE TRAFFIC SIDE OF THE DEVICE. PAYMENT FOR TRAFFIC DRUMS SHALL BE CONSIDERED INCLUDED IN THE PRICE BID FOR VARIOUS TRAILER MOUNTED DEVICES.
11. ALL TRAILER MOUNTED DEVICES SUCH AS ARROW PANELS AND PORTABLE CHANGEABLE MESSAGE SIGNS SHALL MEET THE REQUIREMENTS OF THE MANUAL FOR ASSESSING SAFETY HARDWARE (MASH).

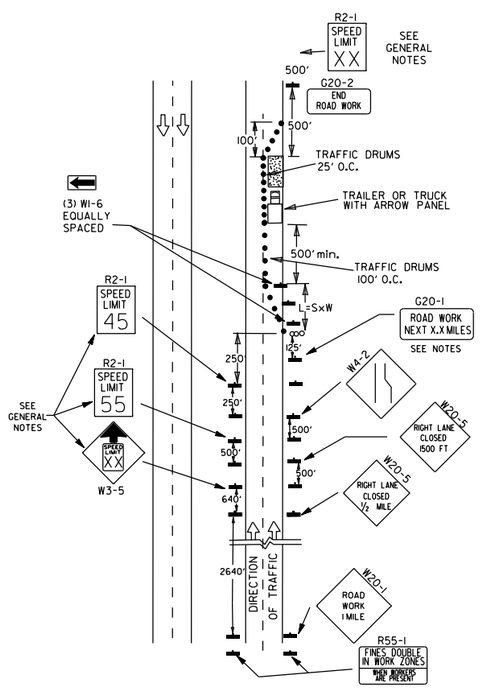

(C) TYPICAL APPLICATION - CONSTRUCTION OPERATIONS OF INTERMEDIATE TO LONG TERM DURATION ON A 4-LANE DIVIDED ROADWAY WHERE HALF OF THE ROADWAY IS CLOSED.

CHANNELIZING DEVICES

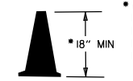

- WHEN CONES ARE USED ON FREEWAYS AND MULTI-LANE HIGHWAYS, THEY SHALL BE 28" MIN. DURING HOURS OF DARKNESS, 28" CONES SHALL BE USED ON ALL ROADWAYS, AND SHALL BE REFLECTORIZED IN ACCORDANCE WITH THE M.U.T.C.D.

CONES

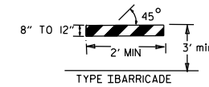

TYPE I BARRICADE

PLASTIC DRUM

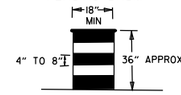

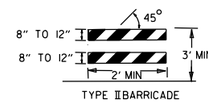

TYPE II BARRICADE

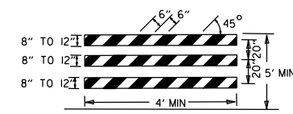

TYPE III BARRICADE

NOTE:
FOR ALL ROAD CLOSURES, THE TYPE III BARRICADES SHALL BE OF SUFFICIENT LENGTH TO EXTEND ACROSS ENTIRE ROADWAY.

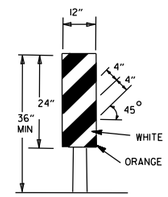

VERTICAL PANEL
VP-1R

VERTICAL PANEL PLACEMENT

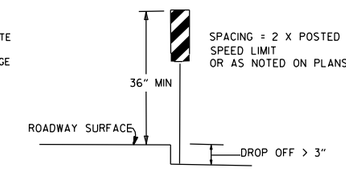

SPACING = 2 X POSTED SPEED LIMIT OR AS NOTED ON PLANS

FLAG

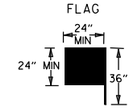

FLAG SHALL BE OF GOOD GRADE RED MATERIAL

TRAFFIC CONTROL DEVICES

NON-INTERSTATE			
VERTICAL DIFFERENTIAL	LOCATION	TRAFFIC CONTROL	
		≤ 45 MPH	> 45 MPH
≤ 1"	CENTERLINE	W8-11	W8-11
> 1" ≤ 3"	CENTERLINE	W8-11 AND CENTERLINE LANE STRIPING	W8-11 AND CENTERLINE LANE STRIPING
> 3"	CENTERLINE	STANDARD LANE CLOSURE(6)	STANDARD LANE CLOSURE(6)
≤ 3"	EDGE OF TRAVELED LANE OR EDGE OF SHOULDER	W8-9 AND TRAFFIC DRUMS(1)	W8-9 AND TRAFFIC DRUMS(1)
> 3" ≤ 6"	EDGE OF TRAVELED LANE OR EDGE OF SHOULDER	W8-17, EDGE LINE STRIPING, AND TRAFFIC DRUMS(1)	W8-17, EDGE LINE STRIPING, AND TRAFFIC DRUMS(1)
> 6" ≤ 18"	EDGE OF TRAVELED LANE OR EDGE OF SHOULDER	W8-17, EDGE LINE STRIPING, AND TRAFFIC DRUMS(1)	W8-17, EDGE LINE STRIPING, AND TRAFFIC DRUMS(2)
> 18" ≤ 24"	EDGE OF TRAVELED LANE OR EDGE OF SHOULDER	W8-17, EDGE LINE STRIPING, AND TRAFFIC DRUMS(1)	A STABILIZED WEDGE, W8-17, EDGE LINE STRIPING AND TRAFFIC DRUMS(3)
> 24"	EDGE OF TRAVELED LANE OR EDGE OF SHOULDER	PRECAST CONCRETE BARRIER(4) & EDGE LINES	PRECAST CONCRETE BARRIER(4) & EDGE LINES

INTERSTATE		
VERTICAL DIFFERENTIAL	LOCATION	TRAFFIC CONTROL
≤ 3"	CENTERLINE	W8-11 AND LANE STRIPING
≤ 3"	EDGE OF TRAVELED LANE OR EDGE OF SHOULDER	W8-9, EDGE LINE STRIPING, AND TRAFFIC DRUMS(2)
> 3" ≤ 6"	EDGE OF TRAVELED LANE OR EDGE OF SHOULDER	W8-17, EDGE LINE STRIPING, AND TRAFFIC DRUMS(2)
> 6"	EDGE OF TRAVELED LANE OR EDGE OF SHOULDER	PRECAST CONCRETE BARRIER & EDGE LINES

INTERSTATE AND NON-INTERSTATE		
FORESLOPE	HEIGHT	TRAFFIC CONTROL
1:1	> 2 FT	PRECAST CONCRETE BARRIER
2:1	≤ 5 FT	TRAFFIC DRUMS
2:1	> 5 FT	PRECAST CONCRETE BARRIER
Flatter than 2:1	N/A	TRAFFIC DRUMS

GENERAL NOTES:

1. WHEN THE SHOULDER AREA IS USED AS PART OF THE TRAVELED LANE AND THERE IS INSUFFICIENT WIDTH TO PLACE TRAFFIC DRUMS ON THE REMAINING SHOULDER WIDTH, THEN VERTICAL PANELS SHALL BE USED.
2. WHEN THERE IS INSUFFICIENT WIDTH TO PLACE TRAFFIC DRUMS ON THE REMAINING SHOULDER WIDTH, A STABILIZED WEDGE SHALL BE USED.
3. PRECAST CONCRETE BARRIER WALL CAN BE USED IN LIEU OF A STABILIZED WEDGE, W8-17 SIGN, EDGE LINE STRIPING, AND TRAFFIC DRUMS, IF AND WHERE DIRECTED BY THE ENGINEER.
4. A STABILIZED WEDGE, W8-17 SIGN, EDGE LINE STRIPING, AND TRAFFIC DRUMS CAN BE USED IN LIEU OF PRECAST CONCRETE BARRIER WALL, IF AND WHERE DIRECTED BY THE ENGINEER.
5. W21-5, W21-5a, AND/OR W21-5b SIGNS SHALL BE USED WHERE THE ROADWAY IS UNOBSTRUCTED IF AND WHERE DIRECTED BY THE ENGINEER.
6. TIME LIMITATIONS MUST CONFORM TO SECTION 603 OF THE STANDARD SPECIFICATIONS FOR HIGHWAY CONSTRUCTION (CURRENT EDITION).

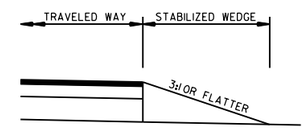

STABILIZED WEDGE

NOTE:
MATERIALS FOR THE STABILIZED WEDGE SHALL MEET THE REQUIREMENTS PROVIDED IN SECTION 603.02 OF THE STANDARD SPECIFICATIONS.

STOP SLOW PADDLE

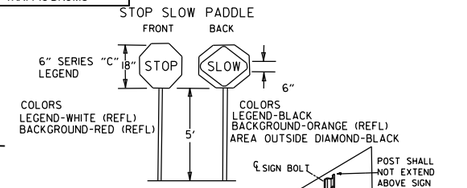

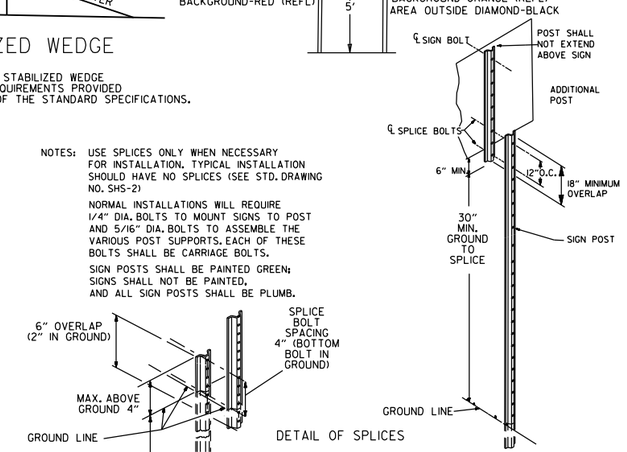

NOTES: USE SPLICES ONLY WHEN NECESSARY FOR INSTALLATION. TYPICAL INSTALLATION SHOULD HAVE NO SPLICES (SEE STD. DRAWING NO. SHS-21)

NORMAL INSTALLATIONS WILL REQUIRE 1/4" DIA. BOLTS TO MOUNT SIGNS TO POST AND 5/16" DIA. BOLTS TO ASSEMBLE THE VARIOUS POST SUPPORTS. EACH OF THESE BOLTS SHALL BE CARRIAGE BOLTS.

SIGN POSTS SHALL BE PAINTED GREEN; SIGNS SHALL NOT BE PAINTED, AND ALL SIGN POSTS SHALL BE PLUMB.

DETAIL OF SPLICES

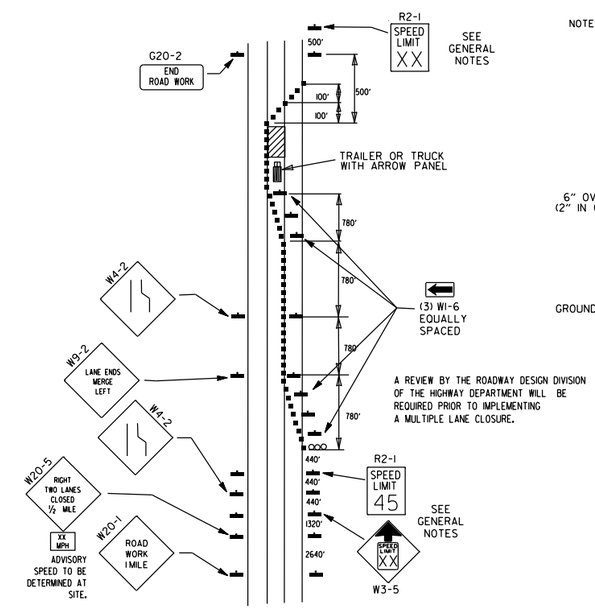

A REVIEW BY THE ROADWAY DESIGN DIVISION OF THE HIGHWAY DEPARTMENT WILL BE REQUIRED PRIOR TO IMPLEMENTING A MULTIPLE LANE CLOSURE.

(D) TYPICAL APPLICATION - CLOSING MULTIPLE LANES OF A MULTILANE HIGHWAY.

DATE	REVISION	FILMED
08-12-21	REVISED TRAFFIC CONTROL DEVICES AND NOTES	
05-20-21	REVISED NOTE 10	
2-27-20	REVISED TRAFFIC CONTROL DEVICES DETAILS	
11-07-19	REVISED NOTE 9, ADDED NOTE 11	
7-25-19	REVISED TRAFFIC CONTROL DEVICES DETAILS	
9-2-15	REVISED NOTE 2 & REPLACED R2-5A WITH W3-5	
10-15-09	ADDED REFERENCE TO MASH	
11-20-08	REVISED SIGN DESIGNATIONS	
11-18-04	ADDED NOTE	
10-1-98	ADDED NOTE	
4-03-97	ADDED (SP) TO W6-1& REVISED TRAFFIC CONTROL DEVICES NOTE	
10-18-96	ADDED R55-1	
10-12-95	MOVED UPPER SPLICE	
6-8-95	REVISED SPLICE DETAIL, TEXT	6-8-95
2-2-95	REVISED PER PART VI, MUTCD, SEPT. 3, 1993	
8-15-91	DRAWN AND PLACED IN USE	

ARKANSAS STATE HIGHWAY COMMISSION

STANDARD TRAFFIC CONTROLS FOR HIGHWAY CONSTRUCTION

STANDARD DRAWING TC-3

REINFORCING BAR TABLE PER BARRIER UNIT

MARK	LOCATION	BAR SIZE	(NO. BARS)	SKETCH
H-1	HORIZONTAL IN BARRIER TIED INSIDE V-1 BARS	#5	(6)	19'-3"
H-2	CENTERED ABOVE DRAIN SLOTS LONG. & TRANSVERSELY	#5	(6)	6'-6"
H-3	TIED ABOVE H-1 BARS TO SUPPORT H-2, TIED TO V-1	#4	(2)	1'-6"
S-1	OVER LIFT HOLES	#4	(2)	2'-5", 90°, 3 3/8" R, LIFTING HOLE
S-2	HORIZ. AROUND SLOTS BETWEEN V-1'S @ DRAIN SLOTS	#4	(2)	1 1/2" R, SLOTS, 7", 1'-6", 1" MIN. CLEAR TO BAR; 5'-1" BAR W/(4) 1 1/2" R BENDS & MIN. 1'-0" OVERLAP
V-1	VERTICAL IN BARRIER(3) EACH END & (2) AT EACH DRAIN SLOTS	#5	(16)	TOTAL LENGTH 4'-9"; 2 3/16" R, 12°, 1 1/2", 9", 2'-1 3/8", 4 3/8"

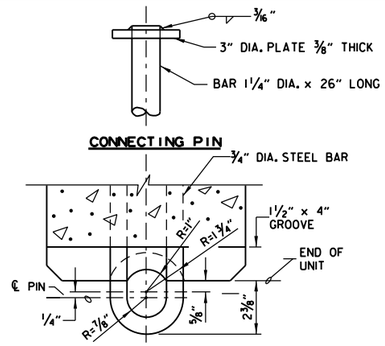

CONNECTION DETAILS

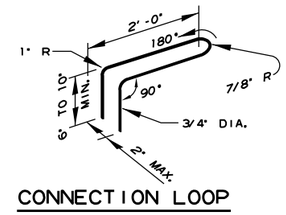

CONNECTION LOOP

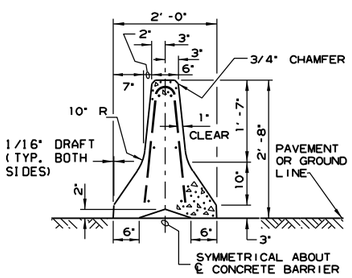

SECTION A-A

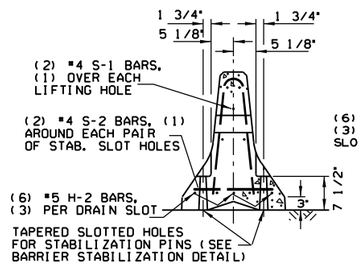

SECTION B-B

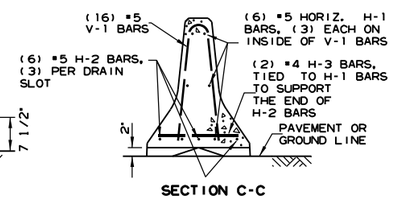

SECTION C-C

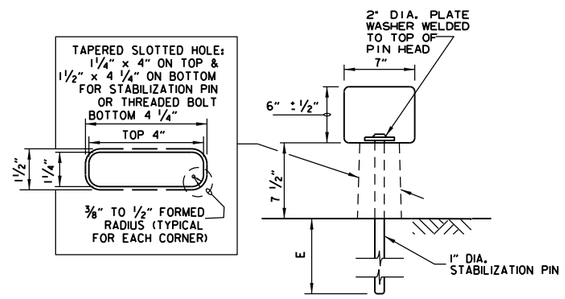

BARRIER STABILIZATION DETAIL

ROADWAY SECTION

(E) 4" - CONCRETE PAVEMENT
8" - ASPHALT PAVEMENT
12" - SHOULDER AREAS

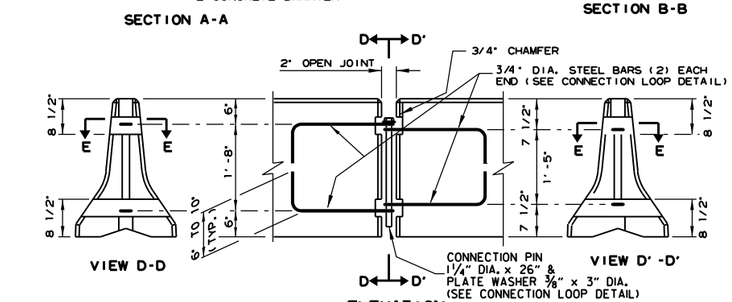

ELEVATION

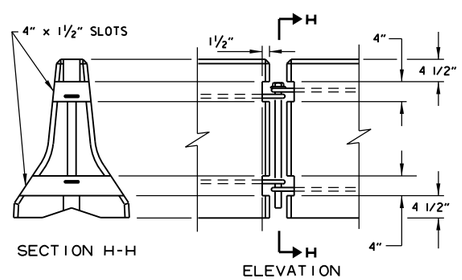

BARRIER REMOVAL SLOT DETAILS

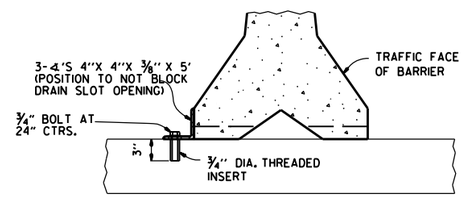

NOTE: " THREADED INSERTS SHALL BE CAST IN PLACE FOR ALL NEW BRIDGE DECKS AND DRILLED AND GROUTED FOR EXISTING BRIDGE DECKS. INSERTS SHALL HAVE A MINIMUM ULTIMATE LOAD CAPACITY OF 8000 LBS. IN TENSION. AFTER REMOVAL OF BARRIER, BOLTS, AND ANGLES, THE INSERTS SHALL BE FILLED WITH APPROVED NON-SHRINK EPOXY.

BARRIER STABILIZATION DETAIL

BRIDGE DECKS

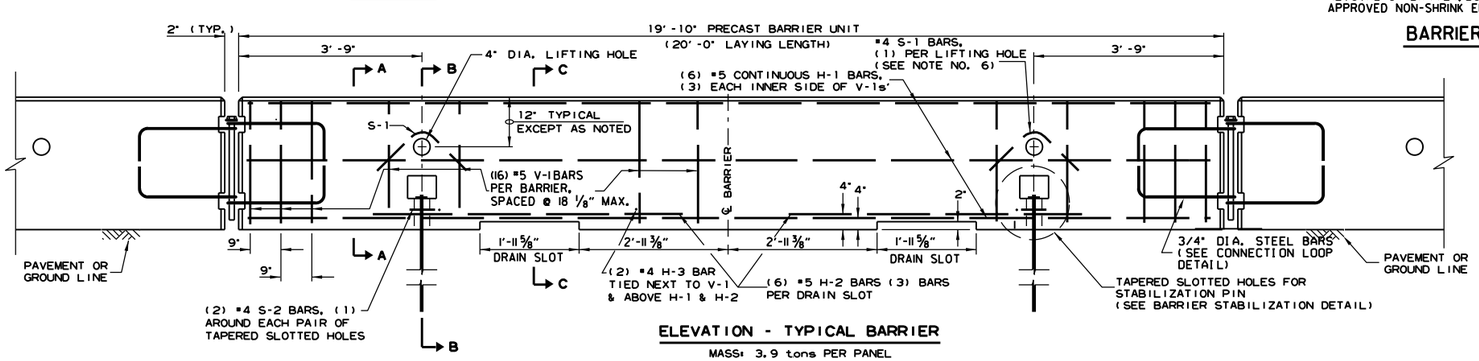

ELEVATION - TYPICAL BARRIER

MASS: 3.9 tons PER PANEL

GENERAL NOTES

1. THE CONTRACTOR SHALL FURNISH THE PRECAST CONCRETE BARRIER UNITS AND SHALL BE RESPONSIBLE FOR THE MANUFACTURE, SHIPMENT, STORAGE, PLACEMENT AND REMOVAL. AT THE COMPLETION OF THE PROJECT, THE PRECAST UNITS WILL REMAIN THE PROPERTY OF THE CONTRACTOR.

2. MATERIALS SHALL MEET THE FOLLOWING MINIMUM REQUIREMENTS:
   CONCRETE: 2500 PSI COMPRESSIVE STRENGTH AT 28 DAYS.
   REINFORCING STEEL: AASHTO M 31 OR M 53, GRADE 60
   STRUCTURAL STEEL: AASHTO-M270 GRADE 36 SHALL BE USED FOR THE CONNECTION PIN, CONNECTION LOOPS, AND STABILIZATION PINS. A ONE PIECE PIN WITH A 3" ROUNDED TOP MAY BE USED IN PLACE OF THE DETAILED CONNECTION PIN.
   DELINEATORS: DELINEATORS SHALL BE MOUNTED AT 10' SPACING ON TOP OF PRECAST BARRIER.

   IN APPLICATIONS WHERE BARRIER WALL IS WITHIN 6 FEET OF A TRAFFIC LANE, ADDITIONAL DELINEATORS SHALL BE PLACED ON THE BARRIER AT 10' SPACING APPROXIMATELY ONE (1) FOOT FROM THE TOP OF THE BARRIER. DELINEATORS SHALL BE ON THE ARDOT QUALIFIED PRODUCTS LIST FOR CONSTRUCTION CONCRETE BARRIER MARKERS.
   DELINEATOR COLOR SHALL BE IN ACCORDANCE WITH THE MANUAL ON UNIFORM TRAFFIC CONTROL DEVICES.
   PAYMENT FOR DELINEATORS SHALL BE CONSIDERED INCLUDED IN THE PRICE BID PER LIN. FT. FOR "FURNISHING AND INSTALLING PRECAST CONCRETE BARRIER". THE CONTRACTOR SHALL CERTIFY TO THE ENGINEER THAT THE MATERIAL AND THE DESIGN USED IN THE PRECAST BARRIER UNITS MEETS THE REQUIREMENTS AS SHOWN ON THIS STANDARD DRAWING.

3. OTHER PRECAST CONCRETE BARRIERS THAT HAVE BEEN CRASH TESTED AND APPROVED BY THE FEDERAL HIGHWAY ADMINISTRATION TO MEET THE REQUIREMENTS OF MANUAL FOR ASSESSING SAFETY HARDWARE (MASH) WILL BE ACCEPTED IN LIEU OF THE BARRIER SHOWN. DRAIN SLOTS SHALL BE PROVIDED AS NEEDED OR AS DIRECTED BY THE ENGINEER. THE CONTRACTOR SHALL FURNISH A CERTIFICATION OF MANUAL FOR ASSESSING SAFETY HARDWARE (MASH) COMPLIANCE FOR ANY OTHER TYPES OF PRECAST BARRIER TO BE USED. THE CERTIFICATION SHALL STATE THAT THE PRECAST CONCRETE BARRIER MEETS THE REQUIREMENTS OF MANUAL FOR ASSESSING SAFETY HARDWARE (MASH). MIXING OF SHAPES WILL NOT BE ALLOWED IN A CONTINUOUS LINE OF UNITS.

4. DOWEL HOLES IN PAVEMENT OR BRIDGE SLABS THAT ARE TO REMAIN IN PLACE SHALL BE FILLED. HOLES IN CONCRETE PAVEMENT AND BRIDGE SLABS SHALL BE FILLED WITH AN APPROVED NON-SHRINK EPOXY GROUT. HOLES IN ASPHALT PAVEMENT SHALL BE FILLED WITH AN APPROVED ASPHALT JOINT FILLER. PAYMENT FOR DRILLING AND FILLING HOLES TO BE INCLUDED IN THE PRICE FOR VARIOUS BARRIER ITEMS.

5. ATTACH UNITS TO ROADWAY SURFACE WITH STABILIZATION PINS AND TO DECK SLABS USING BOLTS WHEN REQUIRED.

6. A 4" WHITE PVC SLEEVE MAY BE USED TO FORM THE LIFTING HOLE AND IF USED THE SLEEVE IS TO BE LEFT IN PLACE.

DATE	REVISION	FILMED
11-07-19	REVISED NOTE 3	
2-27-14	REVISED BARRIER STABILIZATION DETAIL	
10-15-09	ADDED REFERENCE TO MASH	
8-5-09	REV. NOTE 3 CONCERNING DRAIN SLOTS	
11-29-07	REVISED NOTE 3	
5-25-06	DELETED GENERAL NOTE 7	
11-18-04	REVISED BARRIER STABILIZATION DETAIL BRIDGE DECKS	
4-10-03	REVISED GENERAL NOTE 2	
8-22-02	ISSUED NEW DRAWING	

ARKANSAS STATE HIGHWAY COMMISSION

STANDARD TRAFFIC CONTROLS FOR HIGHWAY CONSTRUCTION - TEMPORARY PRECAST BARRIER

STANDARD DRAWING TC-4

Ⓐ 4 feet or greater preferred. If less than 4 feet, Precast Units shall be connected to slab (SEE BARRIER STABILIZATION DETAIL-BRIDGE DECKS STD. DRWG. TC-4)

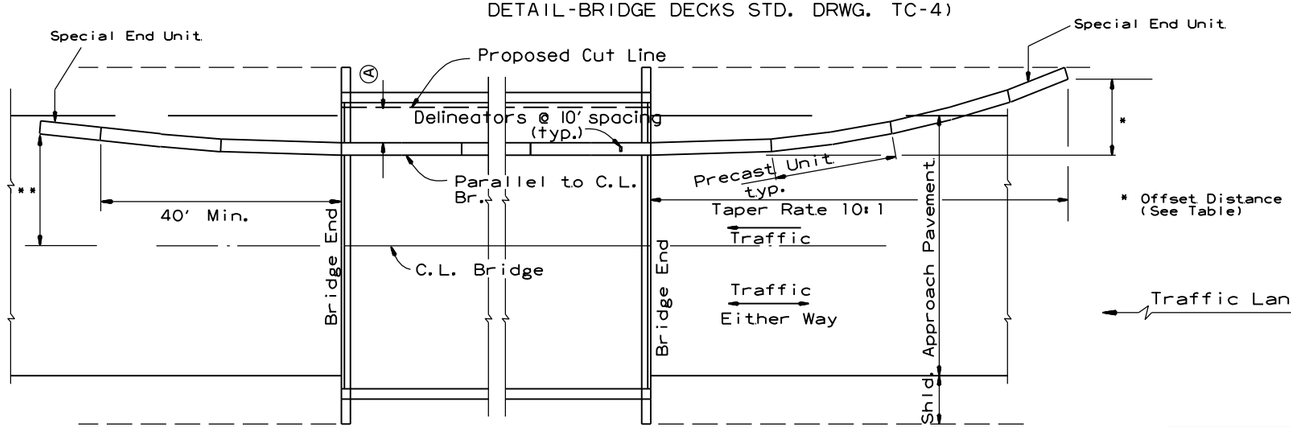

BARRIER PLACEMENT ALONG BRIDGE WITH OFFSET

No Scale

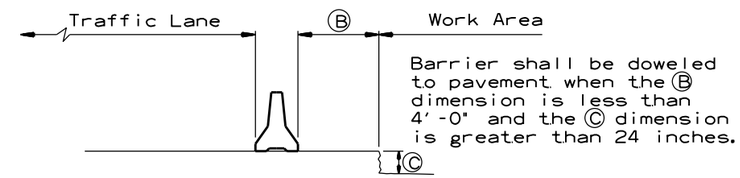

Barrier shall be doweled to pavement when the Ⓑ dimension is less than 4'-0" and the Ⓒ dimension is greater than 24 inches.

SECTION J-J

No Scale

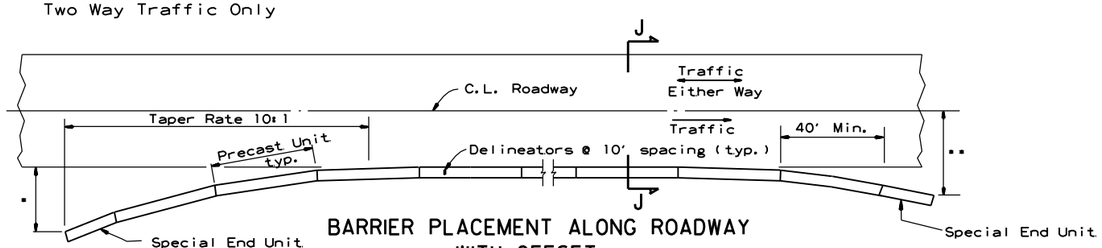

BARRIER PLACEMENT ALONG ROADWAY WITH OFFSET

No Scale

* Offset Distance (See Table)

** Offset Distance For Two Way Traffic Only

Offset Distance Table

Speed (MPH)	Offset Distance (FT.)
≤ 45	12
> 45	18

If offset distance is not attainable, then see "Barrier Placement With Attenuator" Detail shown below.

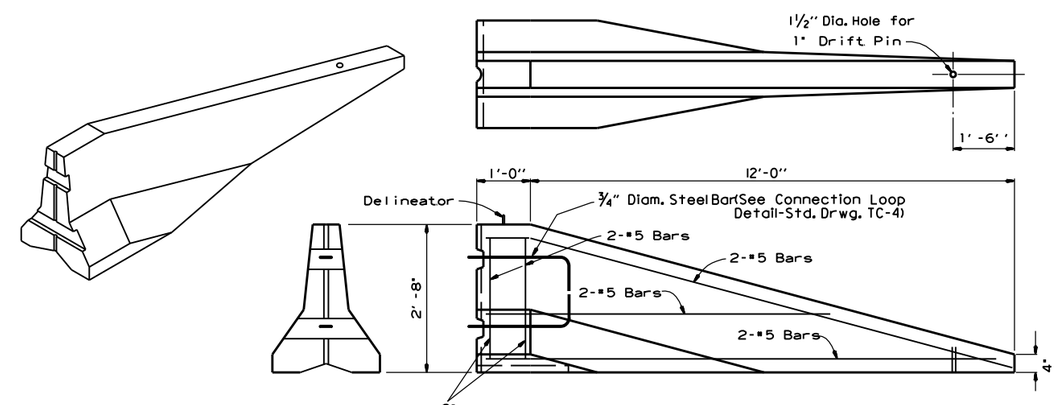

SPECIAL END UNIT

No Scale

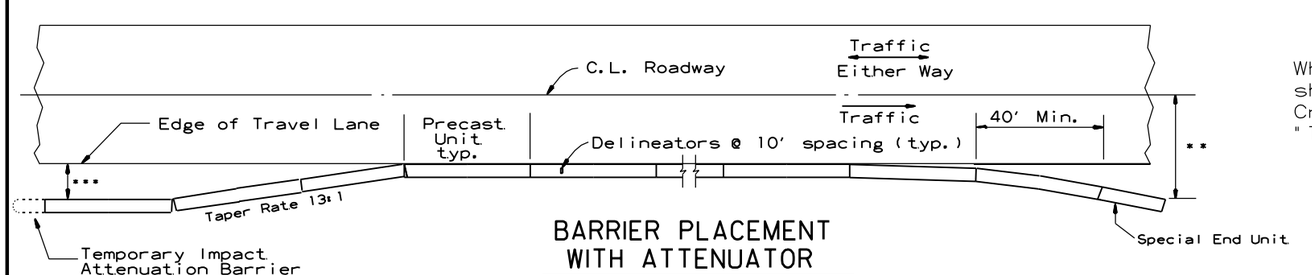

BARRIER PLACEMENT WITH ATTENUATOR

No Scale

*** Min. 3'-0" From Edge of Travel Lane to Nearest Edge of Attenuator

** Offset Distance For Two Way Traffic Only

General Notes

When shown on the Plans, the ends of the Temporary Precast Concrete Barrier shall be protected with a Manual For Assessing Safety Hardware (MASH) approved Crash Cushion. Payment for Crash Cushions shall be made under the item of "Temporary Impact Attenuation Barrier."

DATE	REVISION	FILMED
11-07-19	REVISED NOTE	
10-15-09	ADDED REFERENCE TO MASH	
5-25-06	REVISED BARRIER PLACEMENT	
8-22-02	ISSUED NEW DRAWING	

ARKANSAS STATE HIGHWAY COMMISSION

STANDARD TRAFFIC CONTROLS FOR HIGHWAY CONSTRUCTION - TEMPORARY PRECAST BARRIER

STANDARD DRAWING TC-5

GENERAL NOTES

INSTALL A MINIMUM OF 2 UPSLOPE STAKES AND 4 DOWNSLOPE STAKES AT AN ANGLE TO WEDGE WATTLE TO BOTTOM OF DITCH.

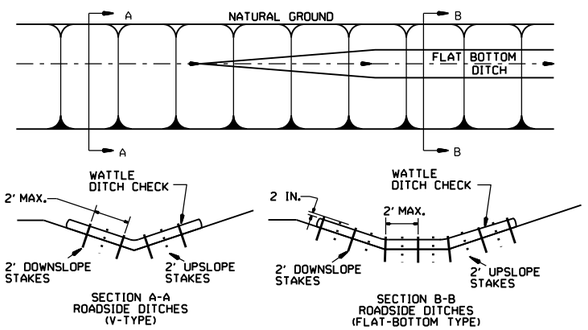

WATTLE DITCH CHECK (E-1)

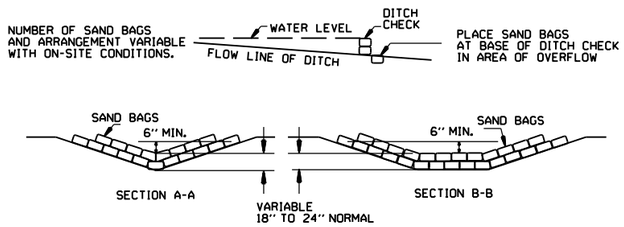

SAND BAG DITCH CHECK (E-5)

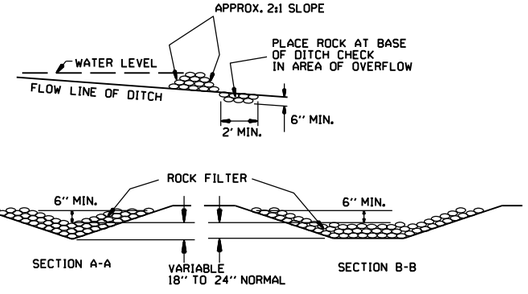

ROCK DITCH CHECK (E-6)

GENERAL NOTES

GEOTEXTILE FABRIC (TYPE 4) IN ACCORDANCE WITH SECTION 625

GEOTEXTILE FABRIC SHALL BE SPLICED TOGETHER WITH A SEWN SEAM ONLY AT A SUPPORT POST OR TWO SECTIONS OF FENCE MAY BE OVERLAPPED INSTEAD. PAYMENT OF ADDITIONAL MATERIAL FOR OVERLAP WILL NOT BE MADE.

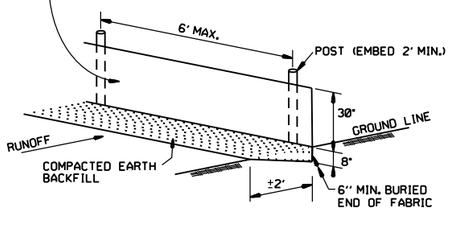

SILT FENCE (E-11)

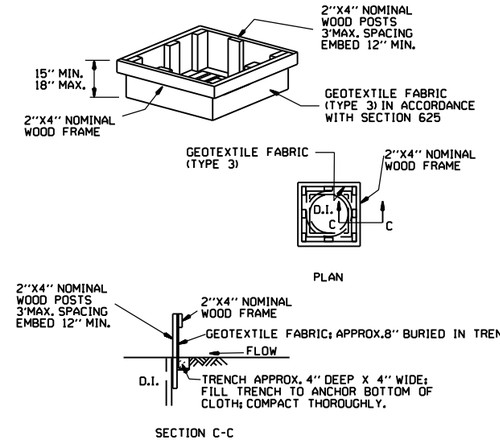

DROP INLET SILT FENCE (E-7)

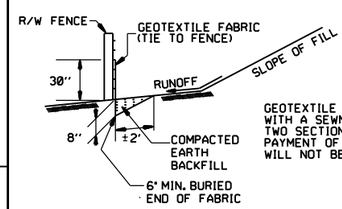

GENERAL NOTES

GEOTEXTILE FABRIC SHALL BE SPLICED TOGETHER WITH A SEWN SEAM ONLY AT A SUPPORT POST, OR TWO SECTIONS OF FENCE MAY BE OVERLAPPED INSTEAD. PAYMENT OF ADDITIONAL MATERIAL FOR OVERLAP WILL NOT BE MADE.

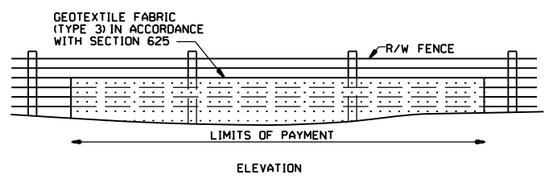

SILT FENCE ON R/W FENCE (E-4)

GENERAL NOTES

1. STRAW BALES SHALL BE INSTALLED SO THAT THE BINDINGS ARE ORIENTED AROUND THE SIDES RATHER THAN ALONG THE TOPS AND BOTTOMS OF THE BALES. THE BALES SHALL BE A MINIMUM OF 30 INCHES IN LENGTH.

2. NO GAPS SHALL BE LEFT BETWEEN BALES.

3. BALED STRAW FILTER BARRIERS COMPLETED AND ACCEPTED WILL BE MEASURED BY THE BALE IN PLACE AS AUTHORIZED BY THE ENGINEER AND WILL BE PAID FOR AT THE CONTRACT UNIT PRICE BID PER BALE FOR BALED STRAW DITCH CHECKS.

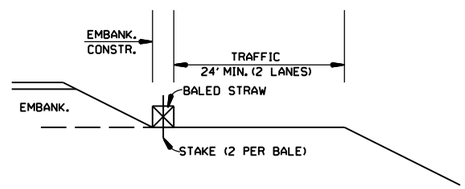

BALED STRAW FILTER BARRIER (E-2)

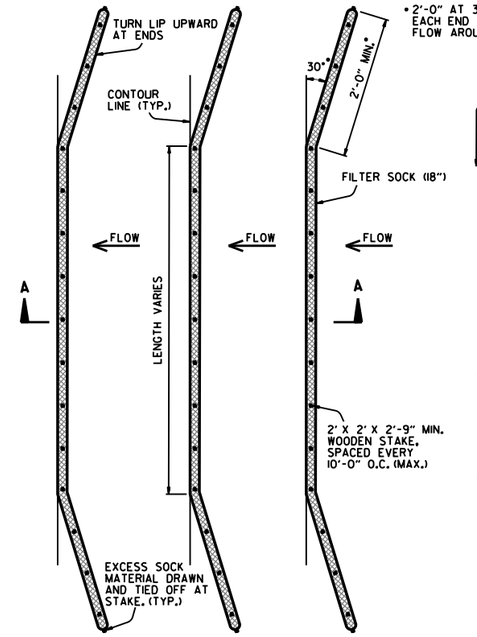

PLAN VIEW
N.T.S.

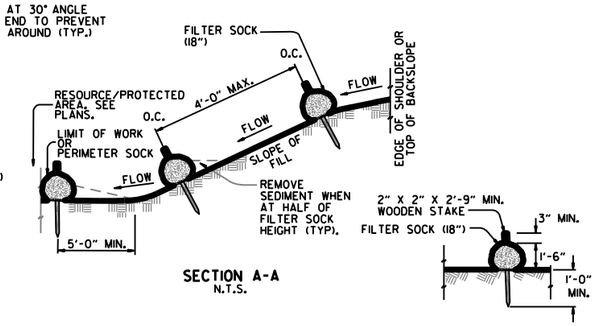

SECTION A-A
N.T.S.

STAKING DETAIL
N.T.S.

NOTES:

1. FILTER SOCKS CAN BE PLACED AT THE TOP, ON THE FACE, AND AT THE TOE OF SLOPES AS SEDIMENT-TRAPPING DEVICES FOR SHEET FLOW RUNOFF.

2. FILTER SOCKS ARE TYPICALLY SUPPLIED AND INSTALLED WITH 18 INCH DIAMETERS. DIAMETER TOLERANCE IS 2 INCHES, AS FILTER SOCKS TEND TO FLATTEN OUT WHEN PLACED.

3. STEEL POSTS MAY BE USED AND SHALL BE ROLLED FROM HIGH CARBON STEEL AND HAVE A MINIMUM OF 1.25 LB./FT. POSTS SHALL BE HOT-DIPPED GALVANIZED OR PAINTED WITH HIGH-GRADE WEATHER RESISTANT BROWN OR BLACK STEEL PAINT. STEEL POSTS SHALL BE EQUIPPED WITH ANCHOR PLATE HAVING A MINIMUM AREA OF 14 SQUARE INCHES. POSTS SHALL BE STUDDED, EMBOSSED, OR PUNCHED. POSTS AND ANCHOR PLATES SHALL CONFORM TO THE REQUIREMENTS OF ASTM A702. NO ADDITIONAL PAYMENT WILL BE PROVIDED FOR STEEL POSTS, BUT PRICE WILL BE CONSIDERED SUBIDIARY TO "FILTER SOCK (18")."

4. FILTER SOCKS MAY BE UP TO 250 FEET LONG. WHEN USED ON LONG SLOPES, FILTER SOCKS MAY BE JOINTED OR STAGGERED AS SHOWN IN DETAILS.

5. INSPECT FILTER SOCKS AFTER EACH RUNOFF EVENT. REMOVE AND REPLACE IF SIGNS OF UNDERCUTTING OR DOWNSTREAM RILLS ARE OBSERVED.

FILTER SOCK ALONG SLOPE (E-3)

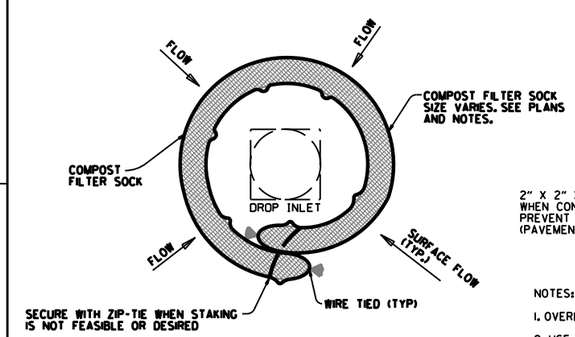

DROP INLET PLAN VIEW
N.T.S.

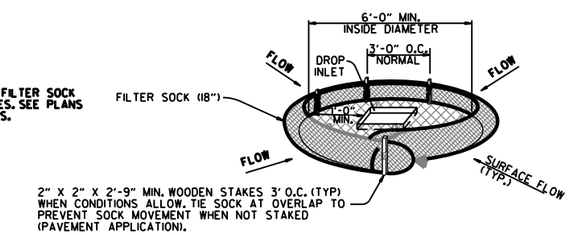

DROP INLET PERSPECTIVE VIEW
N.T.S.

NOTES:

1. OVERLAP ENDS OF SOCK (1' MIN. 3' MAX.).

2. USE 18" DIA. SOCK IN NON-TRAFFIC AREAS OR AREAS WHERE SAFETY IS NOT A CONCERN.

COMPOST FILTER SOCK DROP INLET PROTECTION (E-13)

DATE	REVISION	FILMED
11-16-17	ADDED FILTER SOCK E-3 AND E-13	
12-15-11	DELETED BALED STRAW DITCH CHECK & ADDED WATTLE DITCH CHECK	
11-18-98	ADDED NOTES	
07-02-98	ADDED BALED STRAW FILTER BARRIER (E-2)	
07-20-95	REVISED SILT FENCE E-4 AND E-11	7-20-95
07-15-94	REV. E-4 & E-11 MIN. 13" BURIED END OF FABRIC	
06-02-94	REVISED E-1,4,7 & 11; DELETED E-2 & 3	6-2-94
04-01-93	REDRAWN	
10-01-92	REDRAWN	
08-02-76	ISSUED R.D.M.	298-7-28-76

ARKANSAS STATE HIGHWAY COMMISSION

TEMPORARY EROSION CONTROL DEVICES

STANDARD DRAWING TEC-1

CLEARING AND GRUBBING

CONSTRUCTION SEQUENCE

1. PLACE PERIMETER CONTROLS (I.E. SILT FENCES , DIVERSION DITCHES, SEDIMENT BASINS, ETC.)
2. PERFORM CLEARING AND GRUBBING OPERATION.

EXCAVATION

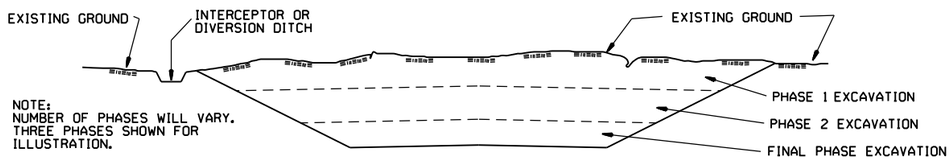

GENERAL NOTE

ALL CUT SLOPES SHALL BE DRESSED, PREPARED, SEEDED, AND MULCHED AS THE WORK PROGRESSES. SLOPES SHALL BE EXCAVATED AND STABILIZED IN EQUAL INCREMENTS NOT TO EXCEED 25 FEET, MEASURED VERTICALLY.

CONSTRUCTION SEQUENCE

1. EXCAVATE AND STABILIZE INTERCEPTOR AND/OR DIVERSION DITCHES.
2. PERFORM PHASE 1 EXCAVATION. PLACE PERMANENT OR TEMPORARY SEEDING.
3. PERFORM PHASE 2 EXCAVATION. PLACE PERMANENT OR TEMPORARY SEEDING.
4. PERFORM FINAL PHASE OF EXCAVATION. PLACE PERMANENT OR TEMPORARY SEEDING. STABILIZE DITCHES. CONSTRUCT DITCH CHECKS, DIVERSION DITCHES, SEDIMENT BASINS, OR OTHER EROSION CONTROL DEVICES AS REQUIRED.

EMBANKMENT

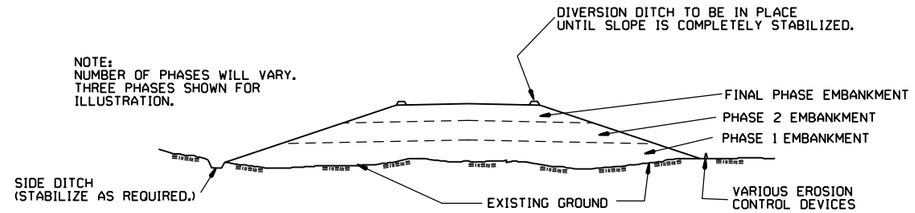

GENERAL NOTE

ALL EMBANKMENT SLOPES SHALL BE DRESSED, PREPARED, SEEDED, AND MULCHED AS THE WORK PROGRESSES. SLOPES SHALL BE CONSTRUCTED AND STABILIZED IN EQUAL INCREMENTS NOT TO EXCEED 25 FEET, MEASURED VERTICALLY.

CONSTRUCTION SEQUENCE

1. CONSTRUCT DIVERSION DITCHES, DITCH CHECKS, SEDIMENT BASINS, SILT FENCES, OR OTHER EROSION CONTROL DEVICES AS SPECIFIED.
2. PLACE PHASE 1 EMBANKMENT WITH PERMANENT OR TEMPORARY SEEDING. PROVIDE DIVERSION DITCHES AND SLOPE DRAINS IF EMBANKMENT CONSTRUCTION IS TO BE TEMPORARILY ABANDONED FOR A PERIOD OF GREATER THAN 21 DAYS.
3. PLACE PHASE 2 EMBANKMENT WITH PERMANENT OR TEMPORARY SEEDING. PROVIDE DIVERSION DITCHES AND SLOPE DRAINS IF EMBANKMENT CONSTRUCTION IS TO BE TEMPORARILY ABANDONED FOR A PERIOD OF GREATER THAN 21 DAYS.
4. PLACE FINAL PHASE OF EMBANKMENT WITH PERMANENT OR TEMPORARY SEEDING. PLACE DIVERSION DITCHES AND SLOPE DRAINS AND MAINTAIN UNTIL ENTIRE SLOPE IS STABILIZED.

DATE	REVISION	FILMED
11-03-94	CORRECTED SPELLING	
6-2-94	Drawn & Issued	6-2-94

ARKANSAS STATE HIGHWAY COMMISSION

TEMPORARY EROSION CONTROL DEVICES

STANDARD DRAWING TEC-3

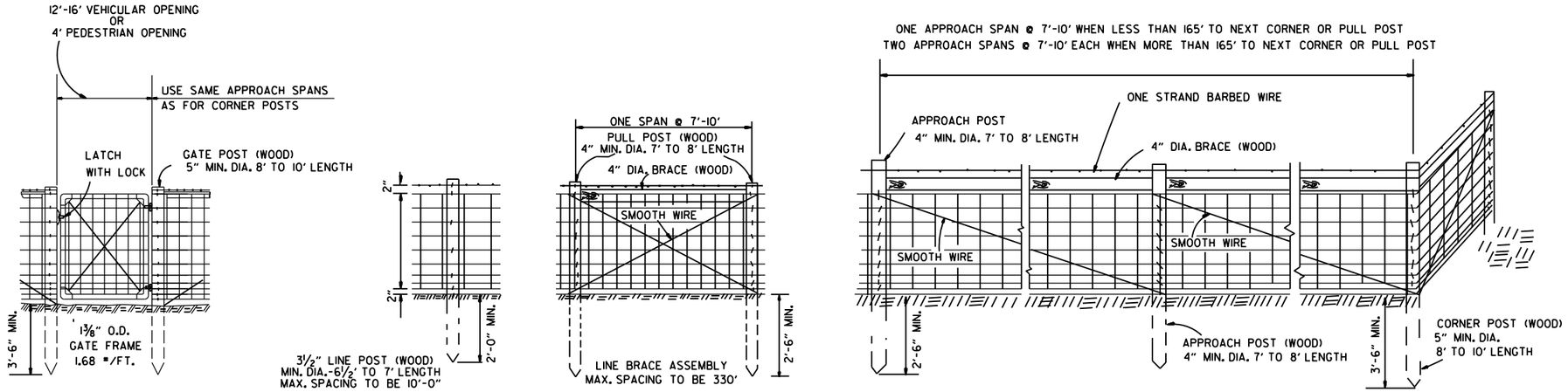

NOTE: STAPLE AT LEAST TOP, BOTTOM AND ALTERNATE WIRES OF WOVEN FABRIC FOR WOOD LINE POSTS.

TYPE A FENCE (WOOD POSTS)

GENERAL NOTES:

STEEL LINE POSTS SHALL BE GALVANIZED, 7 FT. IN LENGTH.

TUBULAR END, CORNER, PULL, OR DIAGONAL BRACES MUST CONFORM TO THE DIMENSIONS AND WEIGHTS SPECIFIED ON STANDARD DRAWING WF-3 (CHAIN LINK).

THE CONTRACTOR SHALL FURNISH AT LEAST 25% OF WOOD LINE POSTS OF 7' LENGTHS IN ORDER TO PROVIDE SUFFICIENT SET IN SOFT GROUND OR SMALL DEPRESSIONS.

GATE HINGES AND LATCHES WITH LOCKS TO BE OF A TYPE APPROVED BY THE ENGINEER. DRIVEWAY GATES, EITHER SINGLE 12' OR 16' OR DOUBLE 6' TO 8' OPENINGS OF THE SAME TYPE AS THE PEDESTRIAN GATE, SHALL BE INSTALLED ON THE RIGHT SIDE OF EACH THROUGH LANE ROAD AT LARGE CULVERTS OR BRIDGE CROSS FENCE FOR USE BY MAINTENANCE EQUIPMENT. LOCATION OF GATES TO BE SHOWN ON THE PLANS OR AS DESIGNATED BY THE ENGINEER.

AT STREAM CROSSINGS THE FENCE SHALL NOT BE CONSTRUCTED ACROSS LARGE STREAMS. WHERE CLEARANCE IS SUFFICIENT FROM THE TOP OF BANK TO THE BRIDGE STRUCTURE, A CROSS CONNECTION SHALL BE CONSTRUCTED BETWEEN THE FENCE ON EACH SIDE OF THE ROAD. WHERE THE CLEARANCE IS NOT SUFFIEICNT, THE FENCE SHALL BE TERMINATED WITH CROSS CONNECTIONS AND END POSTS ADJACENT TO THE BRIDGE ABUTMENTS OR CULVERT WINGWALLS.

SPLICE FOR WOVEN WIRE BETWEEN PULL POST SHALL BE BY THE "WESTERN UNION METHOD" AS DESCRIBED AS FOLLOWS: THE VERTICAL WIRES FOR EACH END OF THE FENCE FABRIC SHALL BE PLACED SIDE BY SIDE AND THE PROJECTING HORIZONTAL WIRES SHALL BE WRAPPED A MINIMUM OF 4 TIMES AROUND THE HORIZONTAL WIRES OF THE FIRST WEB.

SPLICE FOR BARBED WIRE BETWEEN PULL POST ASSEMBLY SHALL BE BY THE "EYE METHOD"; AS DESCRIBED AS FOLLOWS: THE ENDS OF THE BARBED WIRE SHALL BE BENT TO FORM A LOOP. THE LOOPS SHALL BE CONNECTED. AFTER THE LOOPS ARE CONNECTED THE ENDS OF THE WIRE SHALL BE WRAPPED AROUND THE PROJECTING WIRE A MINIMUM OF 4 TIMES FOR EACH WIRE LOOP.

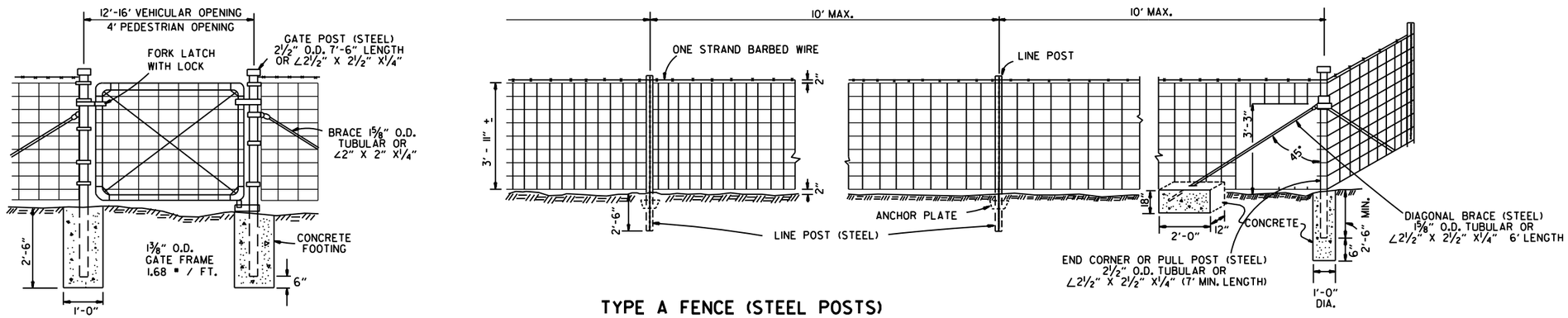

TYPE A FENCE (STEEL POSTS)

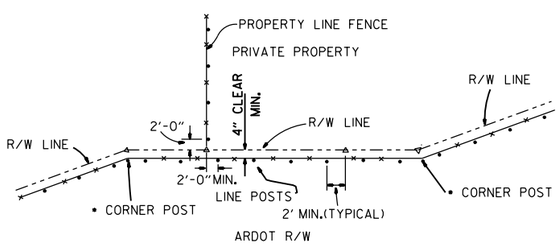

•NOTE: RIGHT-OF-WAY MONUMENTS SHALL NOT BE DISTURBED BY FENCE CONSTRUCTION. CORNER POSTS SHALL BE CONSTRUCTED 2' FROM THE RIGHT-OF-WAY MONUMENT OR AS DIRECTED BY THE ENGINEER.

△ - R/W MONUMENTS
• - FENCE POSTS

RIGHT-OF-WAY FENCE LOCATION

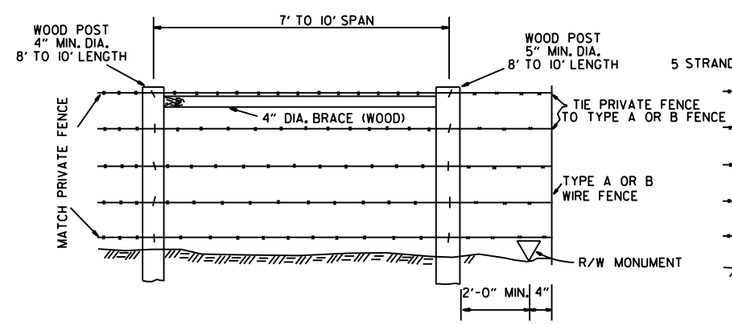

WHERE EXISTING PRIVATE FENCE CONSISTS OF STEEL POSTS, USE END POST ASSEMBLY AS SHOWN WITH TYPE A FENCE OR OTHER END POST ASSEMBLY AS APPROVED BY THE ENGINEER.

PRIVATE FENCE TERMINAL INSTALLATION

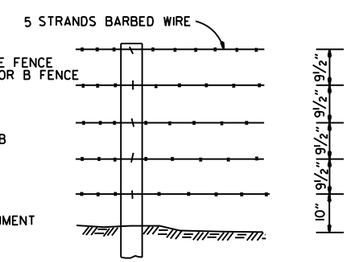

SPACING AND SIZE OF POSTS FOR TYPE B FENCE SHALL BE THE SAME AS TYPE A FENCE.

TYPE B FENCE

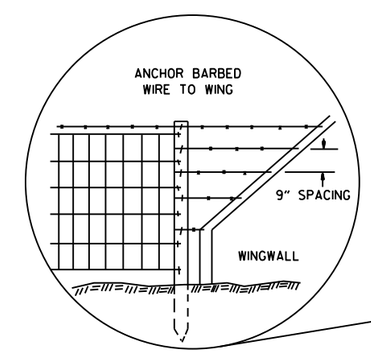

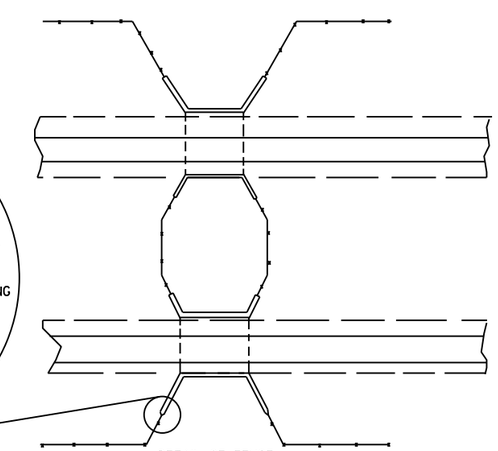

DETAIL OF FENCE CONSTRUCTION AT LARGE CULVERTS (5' IN HEIGHT AND OVER)

DATE	REVISION	DATE FILMED
8-22-02	REVISED GENERAL NOTES	
10-18-96	REVISED ASTM REF. TO AASHTO	
11-22-95	REVISED R-O-W LOCATION DETAIL	
6-2-94	ADDED CORNER POST NOTE	6-2-94
8-5-93	REVISED R-O-W LOCATION DETAIL	8-5-93
10-1-92	ADDED STAPLE NOTE	
8-2-90	REV'D PULL POST LENGTH	
11-30-89	DELETED CLASS CONC.	
7-15-88	ADDED SPLICE NOTES	
7-15-88	ADDED HEIGHT DIMENSION	
4-3-87	REVISED VARIOUS NOTES	
	AND GENERAL NOTES	
11-1-84	MAX. POST SPACING	
1-4-83	MIN. DIA. LINE POST	
10-2-72	REVISED & REDRAWN	

ARKANSAS STATE HIGHWAY COMMISSION

WIRE FENCE
TYPE A AND B

STANDARD DRAWING WF-1

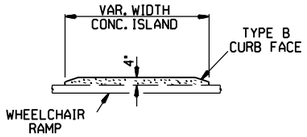

CONCRETE ISLAND DETAIL

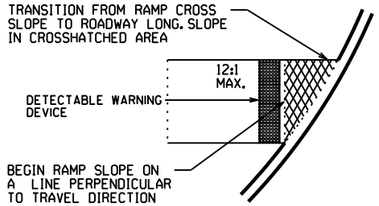

SLOPE TRANSITION DETAILS

TYPE 1 RAMP DIMENSIONS AND QUANTITIES

RADIUS "R"	DISTANCE "X"	DISTANCE "Y"	LENGTH "L"	RAMP AREA "A"
FEET	FEET	FEET	FEET	SQ. YD.
15	11.67	18.82	32.18	26.21
20	11.52	22.28	35.46	30.07
25	11.43	26.60	38.77	33.80
30	11.37	30.26	40.93	36.90
35	11.33	33.51	43.11	39.77
40	11.30	36.45	45.26	42.45
45	11.27	39.16	47.34	44.97
50	11.25	41.69	49.36	47.35
55	11.24	44.07	51.31	49.63
60	11.22	46.33	53.21	51.80

GENERAL NOTES FOR DETECTABLE WARNING DEVICES

THE DETECTABLE WARNING DEVICE SHALL BE LOCATED SO THAT THE NEAREST EDGE OF THE DEVICE IS 6 TO 8 INCHES FROM THE FACE OF THE CURB.
TRUNCATED DOMES IN THE DETECTABLE WARNING SURFACE SHALL MEET THE REQUIREMENTS OF THE GEOMETRIC CONFIGURATION SHOWN.
DOMES SHALL BE ALIGNED ON A SQUARE GRID IN THE PREDOMINANT DIRECTION OF TRAVEL TO PERMIT WHEELS TO ROLL BETWEEN DOMES.
DETECTABLE WARNING DEVICE SHALL BE 24 INCHES IN THE DIRECTION OF TRAVEL AND EXTEND THE FULL WIDTH OF THE CURB RAMP OR FLUSH SURFACE.
DETECTABLE WARNING DEVICE SHALL BE ON THE ARDOT QUALIFIED PRODUCTS LIST FOR CAST-IN-PLACE TACTILE PANELS (ADA DETECTABLE WARNING).

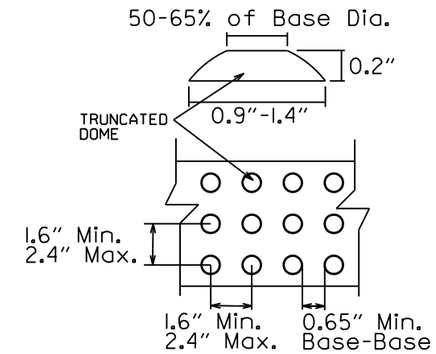

DETECTABLE WARNING DEVICE DETAIL

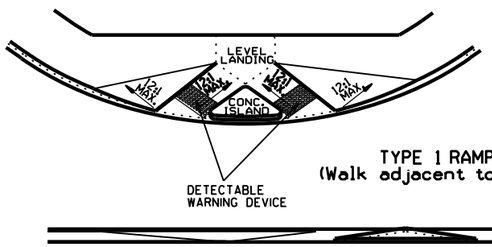

TYPE 1 RAMP
(Walk adjacent to curb)

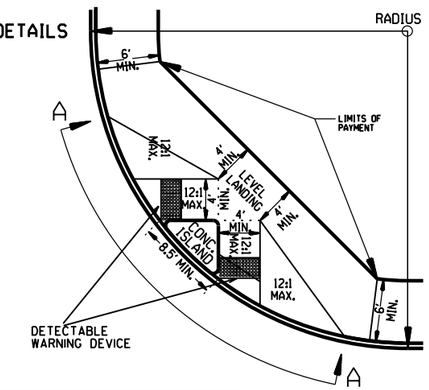

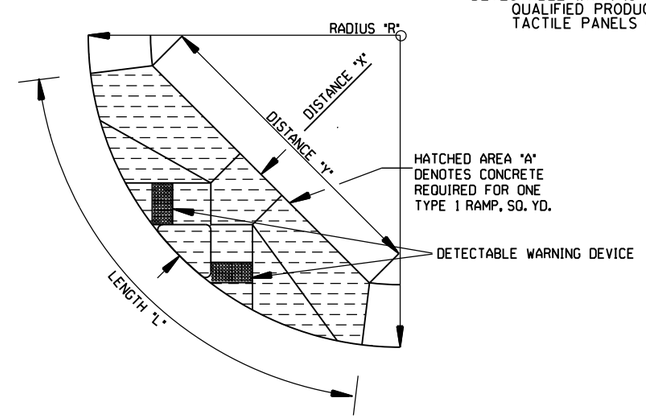

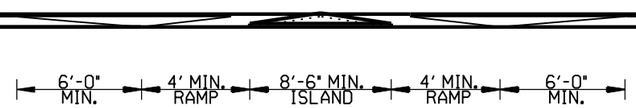

SECTION A-A

GENERAL NOTES:

IN NEW CONSTRUCTION, UNLESS OTHERWISE INDICATED ON THE PLANS, WHEELCHAIR RAMPS ARE TO BE PROVIDED AT ALL CORNERS OF CURBED STREET INTERSECTIONS AND MID-BLOCK CROSSWALK LOCATIONS.
IN ALTERATIONS WHEELCHAIR RAMPS ARE TO BE PROVIDED AT CURBED STREET INTERSECTIONS WITH PEDESTRIAN TRAFFIC AND MID-BLOCK CROSSWALK LOCATIONS.
THE LENGTH OF THE RAMP SHALL BE SUCH THAT THE SLOPE DOES NOT EXCEED 12:1. THE SURFACE TEXTURE OF THE RAMP SHALL CONFORM TO A CLASS 6 FINISH ACCORDING TO SECTION 802.19.
THE NORMAL GUTTER GRADE SHALL BE MAINTAINED THROUGH THE AREA OF THE RAMP.
ALL PAVEMENT MARKINGS SHALL BE IN ACCORDANCE WITH THE LATEST EDITION OF THE MANUAL OF UNIFORM TRAFFIC CONTROL DEVICES PUBLISHED BY THE FEDERAL HIGHWAY ADMINISTRATION.
THE MINIMUM THICKNESS OF THE RAMP, WALK, & LANDING SHALL BE 4".
THE MINIMUM WIDTH OF THE RAMPS SHALL BE THE WALK WIDTH OR 36", WHICHEVER IS GREATER.
RAMPS SHALL BE MODIFIED AS NECESSARY TO INSURE THAT THEY ARE PARALLEL TO A LINE DRAWN FROM THE CENTER OF ONE RAMP TO THE CENTER OF THE RAMP ON THE OPPOSITE SIDE OF THE INTERSECTION.
THE DIMENSIONS AND QUANTITIES SHOWN ON THIS DRAWING ARE FOR A 90° INTERSECTION ONLY. DIMENSIONS AND QUANTITIES FOR SKEWED INTERSECTIONS WILL VARY, AND ARE TO BE DETERMINED BY THE ENGINEER.

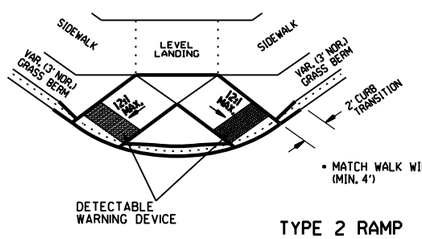

TYPE 2 RAMP

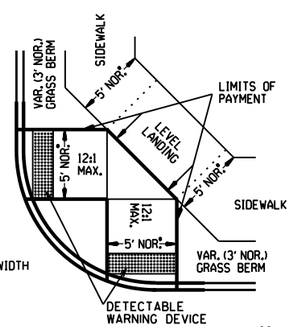

NOTE:
THE CROSS SLOPE OF THE RAMPS, LEVEL LANDINGS, AND SIDEWALKS SHALL NOT EXCEED 2.0% UNLESS REQUIRED TO MATCH STREET LONGTITUDINAL GRADE.

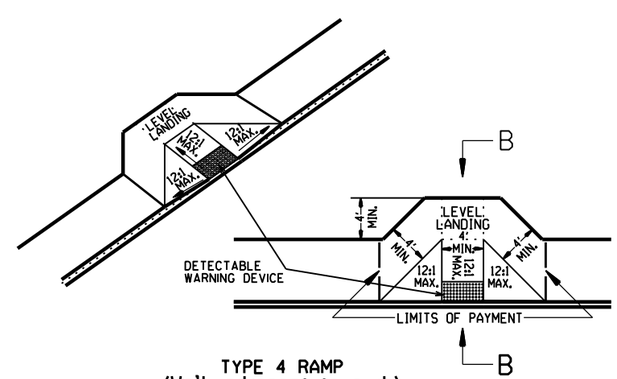

TYPE 4 RAMP
(Walk adjacent to curb)

RAMP SELECTION CRITERIA

FIRST CHOICE	TYPE 1	CORNER LOCATIONS WITH THE WALK ADJACENT TO THE CURB (BOTH NEW CONSTRUCTION AND ALTERATIONS).
	TYPE 2	CORNER LOCATIONS WITH THE WALK OFFSET FROM THE CURB A DISTANCE INSUFFICIENT TO ALLOW THE REQUIRED RAMP SLOPE (BOTH NEW CONSTRUCTION AND ALTERATIONS).
	TYPE 3	CORNER LOCATIONS WITH THE WALK OFFSET FROM THE CURB A DISTANCE SUFFICIENT TO ALLOW THE REQUIRED RAMP SLOPE (BOTH NEW CONSTRUCTION AND ALTERATIONS).
	TYPE 4	TANGENT LOCATIONS (BOTH NEW CONSTRUCTION AND ALTERATIONS).
SECOND CHOICE	TYPE 5	TANGENT LOCATIONS (ALTERATIONS ONLY).
THIRD CHOICE	TYPE 6	CORNER LOCATIONS (ALTERATIONS ONLY). THIS RAMP MAY BE USED ONLY IF THE TYPE 5 RAMPS CANNOT BE PLACED AT THE ENDS OF THE RADIUS.
FOURTH CHOICE		IF SITE CONSTRAINTS PREVENT THE CONSTRUCTION OF ANY OF THE TYPES LISTED, THEN AND ONLY THEN CAN THE 12:1 MAX. SLOPE ON THE RAMP BE EXCEEDED TO PROVIDE ACCESS TO THE STREET LEVEL (ALTERATIONS ONLY). THE SLOPE CAN BE STEEPENED TO A 10:1 MAX. FOR A MAX. LENGTH OF 5' OR A 8:1 MAX. FOR A MAX. LENGTH OF 2'. SLOPES STEEPER THAN 8:1 ARE NOT ALLOWED UNDER ANY CIRCUMSTANCES.

NOTE: IN ALTERATIONS, THE SELECTION OF THE TYPE OF WHEELCHAIR RAMP TO BE CONSTRUCTED SHALL BE BASED ON THE AMOUNT OF RIGHT-OF-WAY AVAILABLE, AND ON THE PRESENCE OF OTHER SITE CONSTRAINTS (UTILITIES, BUILDINGS, ETC.). THE TABLE ABOVE LISTS THE ORDER IN WHICH THE RAMPS ARE TO BE CONSIDERED.

AN ALTERATION IS DEFINED AS A PROJECT THAT CHANGES OR AFFECTS THE USE OF A PEDESTRIAN PATHWAY (OVERLAYS, SIGNALIZATION PROJECTS, ETC.) BUT DOES NOT REQUIRE THE PURCHASE OF ADDITIONAL RIGHT-OF-WAY. ALL PROJECTS THAT REQUIRE THE PURCHASE OF ADDITIONAL RIGHT-OF-WAY WILL USUALLY BE CONSIDERED NEW CONSTRUCTION FOR THE PURPOSES OF THE CHART ABOVE.

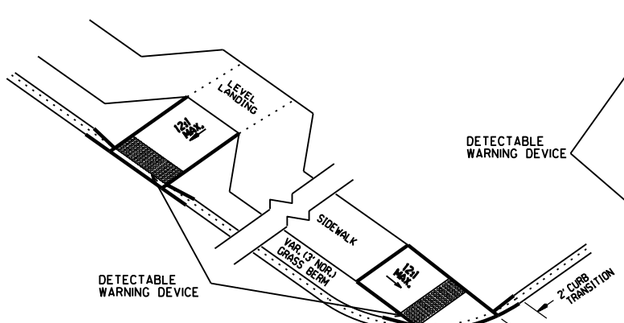

TYPE 3 RAMP

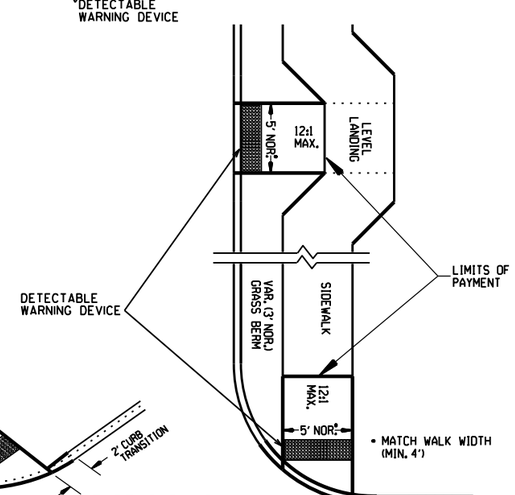

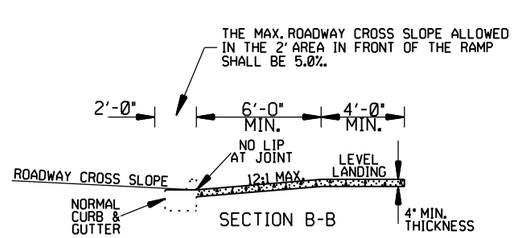

SECTION B-B

DATE	REVISION	DATE FILM
11-10-05	REVISED TO NEW SIDEWALK POLICY	
10-9-03	REVISED GEN. NOTES & ADDED NOTE	
4-10-03	REV. DETECTABLE WARNING DEVICES	
8-22-02	ADD DETECTABLE WARNING DEVICES	
3-30-00	ADD. SLOPE TRANS. & REV. ISL. DIMS.	
11-18-98	REVISED NOTES	
8-12-98	REVISED TEXTURE	
7-02-98	REDRAWN & REISSUED	
10-18-96	CORRECTED DIMENSIONS	10-18-96
5-24-90	FROM 8 TO 12 MAX. SLOPES	5-24-90
7-15-88	ADJUSTED MAX. SLOPE	652-7-15-88
7-14-88	INCLUD. "CONC. ISLD." IN PAY ITEM	------
6-02-76	ISSUED-P.H.D.	299-7-28-76

ARKANSAS STATE HIGHWAY COMMISSION

WHEELCHAIR RAMPS
NEW CONSTRUCTION
AND ALTERATIONS

STANDARD DRAWING WR-1